Preface

This guide proposes a procedure for assembling the Prisma Plus “System G”.

We have designed it to help you successfully complete your first projects. It ensures that assembling and cabling staff, for whom it is intended, will benefit from the considerable experience in this field acquired by Schneider Electric and its customers. In short, it is an essential workshop tool.

There are several approaches for assembling Prisma Plus components. In this guide we propose one approach which you can add to according to your professional organisation and experience.

This guide does not replace the technical manuals supplied in the packing of each component, but recommends an assembly sequence for the components and provides information to complement that given in the manuals (assembly tips and tricks, specific assembly recommendations, warnings, etc.).

Contents

Presentation of the components

Wall-mount enclosure structure
1. Pillar
2. Rear panel
3. Functional upright
4. Top plate
5. Bottom plate
6. Gland plate
7. Side panel

Mounting plates and switchgear
8. Horizontal Compact NS incoming unit on mounting plate
9. Multi 9 mounting plate: modular rail
10. Contactors

Busbars
11. Powerclip insulated busbar
12. Tap-off blocks

Distribution blocks
13. Multiclip
14. Comb busbar

Wiring running
15. Trunking
16. Trunking for fine wiring

Power cables
17. Incoming connection block
18. Power supply block
19. Earthing terminal block

Front panel finish
20. Front plate support frame
21. Front plate
22. Barrier

Cover panels
23. Transparent door
24. Plain wicket door

Presentation of the components

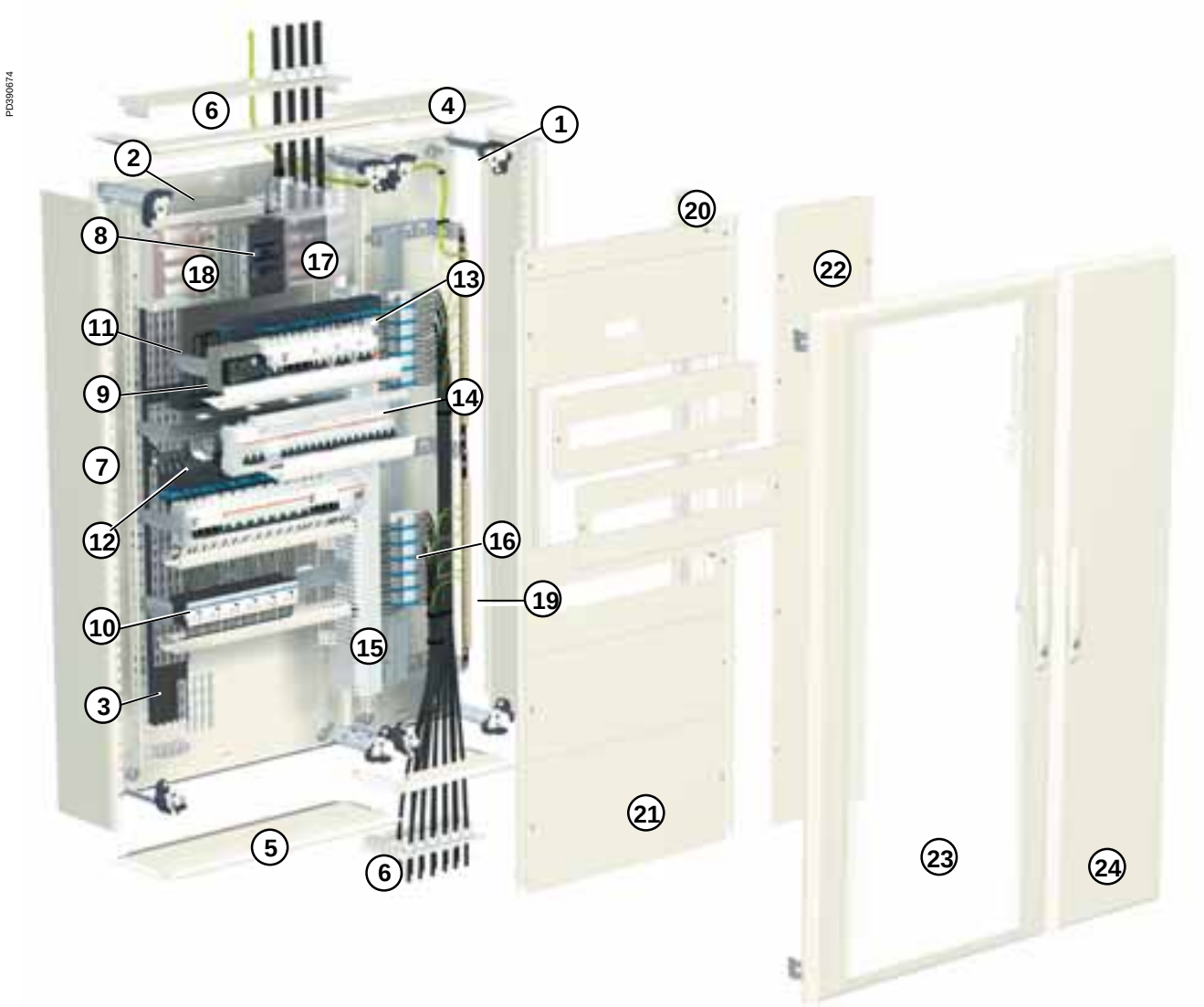

Instructions for use

This manual describes a procedure for assembling the Prisma Plus “system G”. It thus indicates the order in which the cubicle components are to be assembled: the technical assembly instructions are found in the manuals supplied in the packaging of each component
The drawings often represent the wall-mount enclosures in vertical position but it is better to work horizontally on a table.

A) Before starting to assemble, you must first identify and sort the components.

B) The actual assembly process, divided up into 7 stages, is organised as follows:


1 – Assembling the rear panel of the wall-mount/floor standing enclosure


2 – Installing the busbars


3 – Installing the mounting plates


4 – Running and cabling the power circuits


5 – Running and cabling the low power and auxiliary circuits


6 – Installing the partitioning


7 – Finishing the front panel and fitting the switchboard panels

Each assembly stage is symbolised by a pictogram also found in the assembly manual. In most cases, the pictogram in the manual can be seen through the packaging’s plastic film.

For some configurations of the cubicle in question, you will not have to carry out all the operations proposed.

C) Testing as per standard IEC 60439-1 must be carried out.

D) The last stage consists of packing the switchboard to ensure protection of the cubicles during transport.

Tools

The recommended tool lists for this section are not complete, but represent the minimum tools required to assemble, cable and inspect the Prisma Plus “system G” cubicles.

Assembling and cabling tools

b **Individual tools**
The tool kit belonging to the assembling and cabling staff must contain at least the following tools:

DD382164

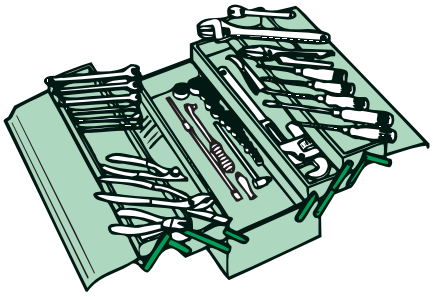

Type of assembly	Tools
Switchboard mounting: enclosure, mounting plate and panels except for switchgear	1 ratchet wrench 1 extension piece 1 x 10 and 13 mm wrench 1 wrench bit socket 1 screwdriver 1 wrench bit for screwdriver 1 wrench bit for pozidriv no. 2 recess 1 x 8 flat screwdriver 1 portable jig-saw
Mounting the switchgear and tightening the connections (Compact NS, etc.)	Socket 7, 8, 10, 13, 16, and 17 mm Hexagon socket bit 4, 5, 6, 8 and 10 Wrench bit for pozidriv no. 1, 2 and 3 recess
Cabling the switchboard	1 flat screwdriver 3 mm - 3.5 mm - 4 mm - 5.5 mm 1 pozidriv no. 2 screwdriver 1 electrician’s knife 1 flat nose pliers 1 stripping pliers 1 cable cutter 1 crimping tool 1 diagonal cutting pliers 1 half round nose pliers 1 bell or tester

DD382258

b **Group tools**
- K 1 torque wrench to tighten all electrical connections to the required torque (max. torque 50 Nm).
- K 1 set of shears to cut flexible bars.
- K 1 punching machine for flexible bars.
- K 1 electrical saw.
- K 1 drill.
- K 1 vacuum cleaner for switchboard cleaning.

NB: *When crimping the lugs, only the pliers recommended by the lug manufacturer must be used.*

Inspection tools

b **Individual tools**
The quality inspector’s basic individual tools are the same as for the assembling and cabling staff, with in addition the few tools below:
- K 1 small hinged mirror.
- K 1 electrical lamp or portable lamp.

b **Group tools**
- K 1 control console.
- K 1 dielectrometer.
- K 1 Multimeter.

DD382260

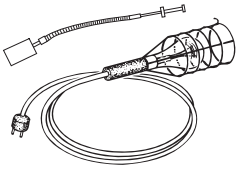

DD382263

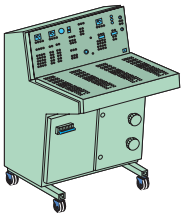

DD382261

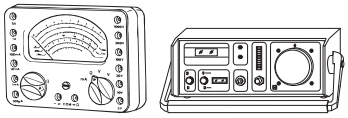

Identify and sort the components

Aim: Identify and sort components to ensure subsequent proper working organisation and fewer handling operations.

b **Identify the assembly stage pictogram shown in the assembly manual**

b **Group the components, devices and accessories, by assembly stage, from assembling of the rear panel through to fitting the wall-mount/floor-standing enclosure panels**

b Collect the components that will be used by the contractor, but do not unpack them.

DD382267

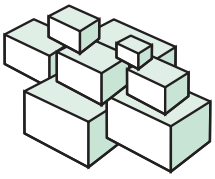

DD382291

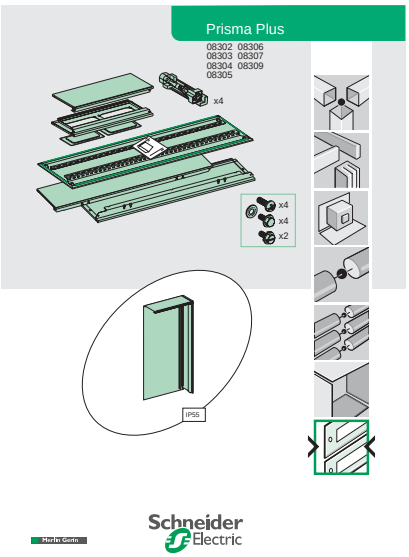

Tip: When you receive your components in your workshop, don't get carried away, don't unpack everything…

Assemble the rear panel of the wall-mount/floor-standing enclosures

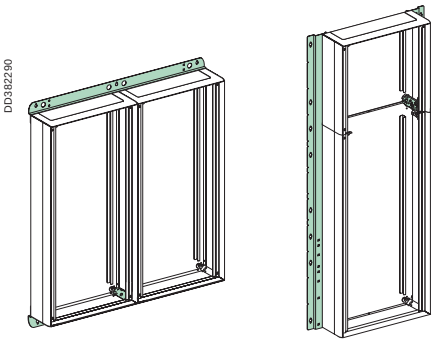

Aim: Assemble the rear panels and carry out the various combinations if required.

Tip: The wall-mount or floor-standing enclosure must be assembled horizontally on a table that is protected to ensure the paintwork is not damaged.

NB: *The cover panels are assembled once the internal components have been mounted and cabled, thus guaranteeing 100% access to components throughout assembly and installation.*

Assembling the IP30, IP31 and IP43 wall-mount or floor-standing enclosures

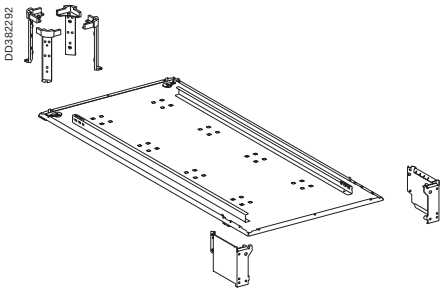

b **Take the rear panel, pillars, plinth gussets (for a floor-standing enclosure) and the assembly manual out of the packing.**

b **Keep the adhesive shocks placed at the rear of the rear panel to prevent deformation**

b **Store the rest of the packing**

Tip: The mounting hardware must be carefully associated with each wall-mount or floor-standing enclosure.
During storage, take measures to prevent damaging component paintwork.

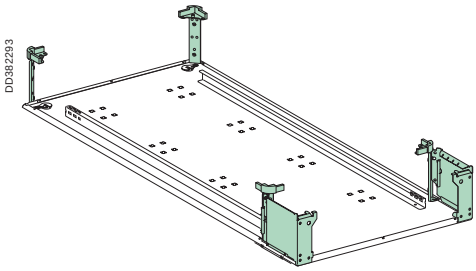

b **Mount the pillars on the rear panel and the gussets for the floor-standing enclosures**

b **Couple the ducts, wall-mount or floor-standing enclosure extensions**
The ducts, wall-mount or floor-standing enclosure extensions are mounted in a similar way to the basic wall-mount and floor-standing enclosure.
Couple the pillars located at the junction of the wall-mount or floor-standing enclosures using the combination kits.

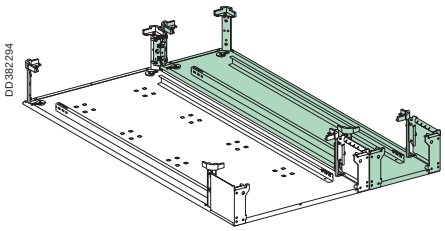

b **Mount the set of cross-members to rigidify the wall-mount or floor-standing enclosure combinations.**
NB: *Mounting of the set of cross-members is recommended for a wall-mount enclosure / duct combination, but becomes compulsory for a combination of 2 wall-mount or floor-standing enclosures.*

Tip: Do not handle the rear panel of the wall-mount or floor-standing enclosure using the pillars.
Take care to ensure the enclosure rear panel remains level during cabling operations.

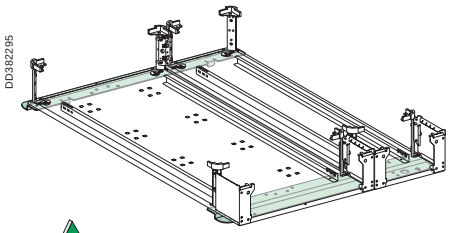

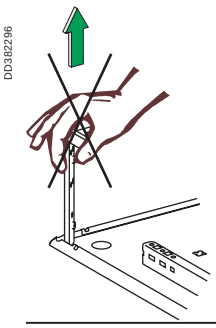

Assemble the rear panel of the wall-mount/floor-standing enclosures

Assembling the IP 55 wall-mount enclosures

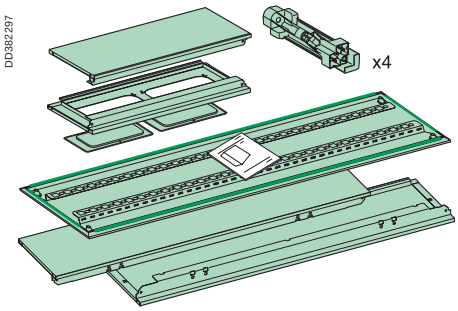

b **Take the rear panel, pillars and the assembly manual out of the packing**

b **Store the rest of the packing**

Tip: The mounting hardware must be carefully associated with each wall-mount enclosure.
During storage, take measures to prevent damaging component paintwork.

b **Mount the pillars on the rear panel**

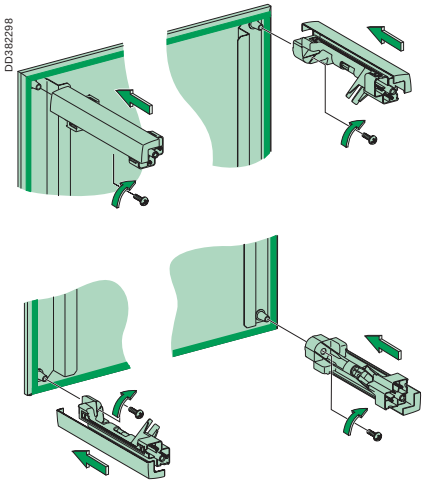

b **Couple the ducts, additional wall-mount or floor-standing enclosures**
The combination kit must be used to couple wall-mount enclosures.

When coupling the enclosures, ensure that the gaskets are positioned properly.

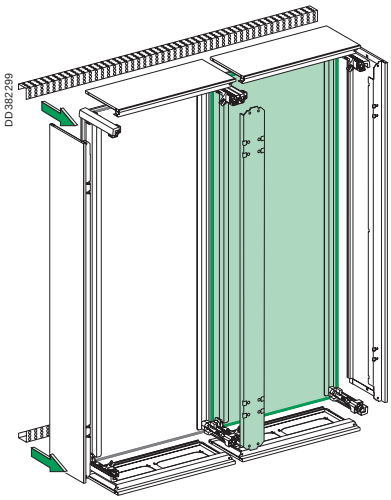

Tip: Do not handle the rear panel of the wall-mount or floor-standing enclosure using the pillars.

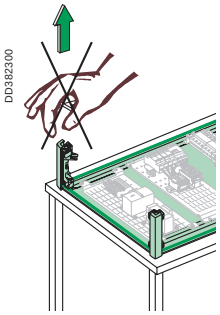

Install the busbars

Aim: This stage consists of positioning the supports and bars making up the busbars.

Tip: If cutting oil is used, the busbars must be cleaned prior to assembly as oil adversely affects insulation properties.

NB:
- *Busbar overall dimensions do not vary with current strength.*
- *Whatever the busbar type, the order of the bars is always the same: from the front to the rear N, L1, L2 and L3.*
- *With the rear busbar, the Neutral is to the left, then L1, L2, L3.*

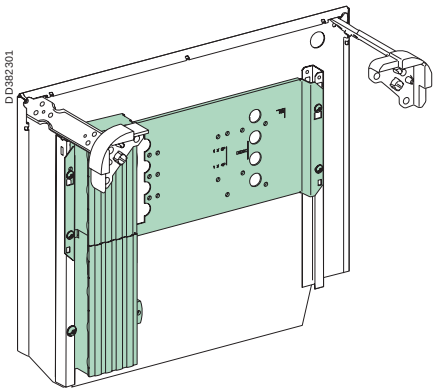

Installing the Powerclip 125 to 630 A insulated busbar

NB: *The busbars are mounted before the mounting plates, except for plates cat. no. 03032, 03073 and 03074 that must be mounted before the Powerclip insulated busbar (for more details on mounting plate installation, refer to the assembly stage "Installing the mounting plates").*

To prevent assembly interference between busbar supports and mounting plates, we recommend that you follow the assembly order below:
- **Position the mounting plates but do not secure them**
- **Define the busbar support positions**
- **Remove the mounting plates except for those that have to be mounted before the busbar**
- **Secure the supports and clip the Powerclip insulated busbar into the notches**

NB: *Pay attention to the mounting direction of the Powerclip insulated busbar (refer to the assembly manual).*
When the Powerclip busbar is supplied by a power supply block, ensure that it reaches the top level of the incoming device mounting plate.
If busbar length needs to be adjusted, cutting must be extremely accurate and on no account exceed the cutting line.

d *When handling the Powerclip busbar, take care not to break the end of the partitions. For safety reasons (creepage distance, insulation, etc.), do not install a Powerclip busbar with a broken partition.*

- **Store the covers of the Powerclip insulated busbar. They will be installed once the wall-mount or floor-standing enclosure has been cabled.**

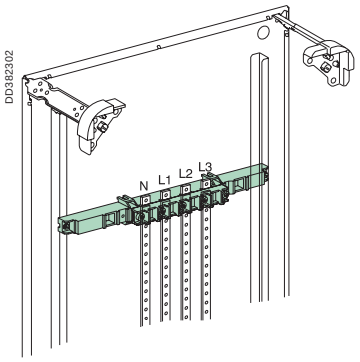

Installing the 160 to 400 A rear busbars in vertical position

- **Fit the busbar with its supports but do not screw them on as they may be transferred later when laying the power cables.**
- **Mark the bars (N – L1 – L2 – L3).**

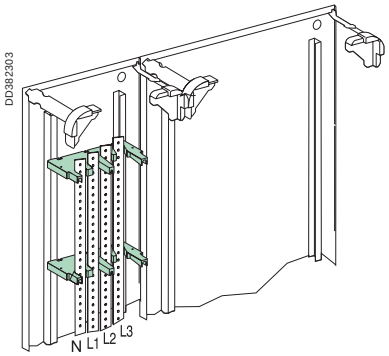

Installing the 160 to 630 A multi-stage busbars in the duct

- **Fit the multi-stage busbar with its supports**
- **Mark the bars (N – L1 – L2 – L3).**