Modbus Plus to SY/MAX Gateway
Programmable Bridge Multiplexer
User Guide

840 USE 110 00 Version 1.0

January 1997

Schneider Automation, Inc.
One High Street
North Andover, MA 01845

GROUPE SCHNEIDER

■ Merlin Gerin ■ Modicon ■ Square D ■ Telemecanique

Preface

The data and illustrations found in this book are not binding. We reserve the right to modify our products in line with our policy of continuous product development. The information in this document is subject to change without notice and should not be construed as a commitment by Schneider Automation, Inc.

Schneider Automation assumes no responsibility for any errors that may appear in this document. If you have any suggests for improvements or amendments or have found errors in this publication, please notify us through your distributor or local Square D office.

No part of this document may be reproduced in any form or by any means, electronic or mechanical, including photocopying, without express written permission of the Publisher, Schneider Automation, Inc.

CAUTION

SAFETY HAZARD

All pertinent state, regional and local safety regulations must be observed when installing and using this product. For reasons of safety and to assure compliance with documented system data, repairs to components should be performed only by the manufacturer..

Failure to observe these precautions can result in injury or equipment damage.

The following are trademarks of Schneider Automation, Inc.:

Modicon	Concept	Modbus Plus
SY/MAX	Modsoft	Quantum Automation Series

Copyright 1997, Schneider Automation, Inc.
Printed in U.S.A.

Contents

Chapter 1 Introduction 1
- 1.1 What The Gateway Does 1
- 1.2 How The Gateway Operates 1

Chapter 2 Modes of Operation 3
- 2.1 Dip Switch Settings 3
- 2.2 Led Indicators 5

Chapter 3 Configuration Mode 7
- 3.1 General Information 7
- 3.2 Device Address 8
- 3.3 Configuration Registers 9
  - 3.3.1 Port Configuration Registers 15
  - 3.3.2 Configuration Register Access - PC/ASCII Terminal 15
  - 3.3.3 Configuration Register Access - Modbus Plus 16
  - 3.3.4 Configuration Registers Access - SY/MAX 19

Chapter 4 Protocol Conversion 20
- 4.1 General Information 20
- 4.2 Gateway Command Mapping 21
- 4.3 Gateway Register Mapping 22
- 4.4 Routing Sy/max - Modbus Plus Messages 22
- 4.5 Advanced Communications Routing 27

Chapter 5 Communication Examples 29

Chapter 6 Error Codes 33

Chapter 7 Modem Requirements 37

Introduction

1

1.1 What The Gateway Does

The BM85Y Modbus Plus™ to SY/MAX® Gateway is a Modicon Communications Interface Module, developed from the BM85S, that provides a communication bridge between SY/MAX or PowerLogic™ systems, and the Modbus Plus local area networks (LAN). Using this device, host computers or intelligent devices which utilize Modbus Plus protocol and SY/MAX systems can exchange information.

The four serial ports of the Gateway are RS-422 compatible with direct pinout to SY/MAX devices. Each port supports communications from 300 baud to 19200 baud.

1.2 How The Gateway Operates

The Modbus Plus to SY/MAX Gateway provides real-time, bi-directional communications. Incoming requests are translated in real-time to the corresponding request in the other protocol, and are then sent out. Once the reply from the slave device is received, the Gateway translates this reply into a response for the originating device. The bi-directional operating capability of the Gateway allows both SY/MAX and Modbus Plus devices, on networks of both Gateway sides, to be masters (communication initiators) and slaves (communication responders) at the same time. The Gateway also offers transparent communication

to the initiating device (SY/MAX or Modbus Plus). This Gateway allows a Modbus Plus device to access all SY/MAX devices as if they were other Modbus Plus devices and, conversely, allows SY/MAX devices to access Modbus Plus devices as if they were other SY/MAX devices. Such access simplifies communications programming.

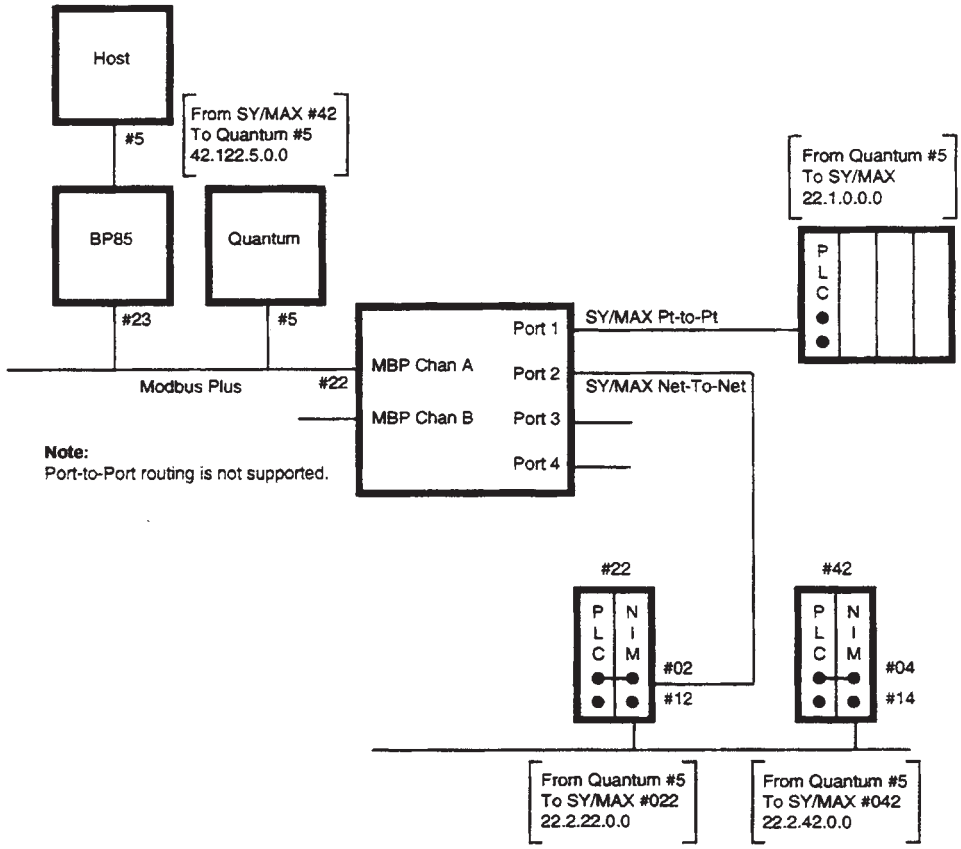

Figure 1 Connection Example

Modes of Operation

2

2.1 Dip Switch Settings

The Gateway operates in two modes—the protocol conversion mode, which is its normal mode of operation, and the configuration mode. In the latter mode, communication parameters for the Gateway (baud rates, time-outs, etc.) can be programmed to and permanently stored in the Gateway's flash memory. The protocol conversion mode then uses the stored parameters.

The operating mode is selected by dip switches located on the back of the Gateway. Figure 2 shows the location of the dip switches.

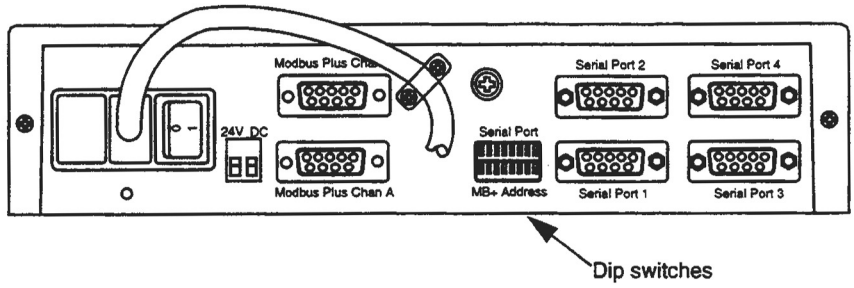

Figure 2 Locstion of BM85 Dip Switches

Choose the mode of operation by selecting the appropriate dip switch positions as described in the steps following Figure 3.

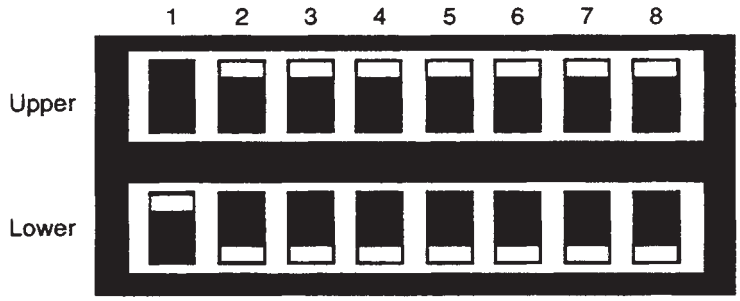

Figure 3 Dip Switch Settings Showing Configuration Mode/Protocol Conversion

Configuration Mode

With switch 1 of the upper bank in the **Up** position, the Gateway is in configuration mode. In this mode, the internal configuration registers of the Gateway, listed in Table 2 on page 10, can be read and written using Modbus Plus and SY/MAX protocol on serial ports 2, 3, and 4. Serial port 1 displays an ASCII menu, allowing the configuration menu shown in Figure 7 on page 16.

The user can switch between configuration and protocol conversion modes without power-cycling the Gateway. Moving the switch from **Up** to **Down** or from **Down** to **Up** places the corresponding mode of operation in effect within 1 second.

CAUTION

EQUIPMENT DAMAGE HAZARD

Messages transmitted during configuration mode will not be translated and will not be routed to their intended destinations. Only communications to the configuration register are allowed during this mode.

Failure to observe this precaution can cause equipment damage.

Protocol Conversion Mode

If switch 1 is **Down**, the Gateway is in protocol conversion mode. In this mode, the Gateway uses the selected communication parameters on all four serial ports.

2.2 LED Indicators

In *configuration mode*, the yellow LED number 1 flashes 10 times per second; the remaining yellow LED indicators flash only when indicating SY/MAX communication on ports 2, 3, and 4. (See Figure 4.)

In *protocol conversion mode*, all four LED indications flash for inbound and outbound SY/MAX communication. *Modicon BM85 Modbus Plus Bridge/Multiplexer User's Guide* (890 USE 103 00) describes the use of the remaining four red and green LED indicators.

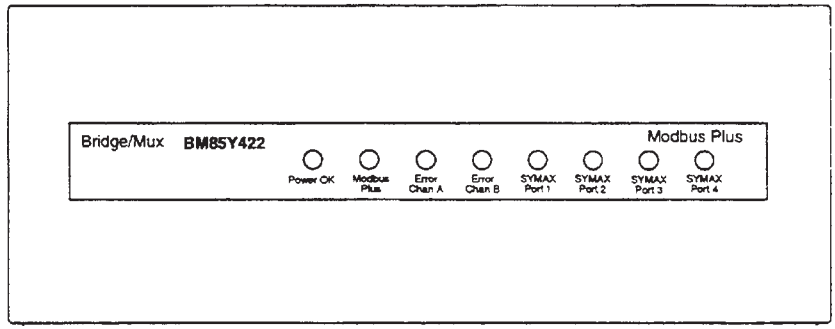

Figure 4 BM85 LEDs

Configuration Mode

3

3.1 General Information

The Gateway is shipped with a factory default configuration allowing the device to be installed and used without performing any port configuration. **The default settings are ports 1 and 2 configured with SY/MAX point-to-point protocol, and ports 3 and 4 configured with SY/MAX PNIM protocol, each at 9600 baud, even parity, 8 data bits, 1 stop bit.** If the default port settings are applicable, the user only needs to set the Gateway device address and installation is complete.

Additionally, placing switch 5 of the upper dip switch in the **Up** position sets the serial ports to the factory default settings. This setting does not change the stored value in the configuration register. The switch is read only on power up. Power up places the device in a known protocol configuration. Port Configuration Setting registers contain values that show the parameters stored instead of the factory default settings. Therefore, the user may determine its configuration. With switch 5 in the **Down** position, the ports are configured according to the port configuration registers. If both switches 1 and 5 are in the **Up** position, switch 1 has precedence.

The configuration mode is used to define the protocol and communications parameters for each of the Gateway serial ports. Configuration is performed during the Gateway installation. The steps to configure the Gateway device are as follows:

1. Set the Gateway device address to a unique node address.
2. To enter configuration mode, set switch 1, upper switch bank, to the **Up** position.

3. Define protocol and communications parameters for each port and save to flash memory.

4. To exit configuration mode, set switch 1 to the **Down** position.

The Gateway communication parameters can be set in any of three ways:

- By using either an ASCII terminal or a PC with terminal emulation program on serial port 1.
- By accessing the configuration parameters with Modbus Plus programming software using the MSTR block.
- By accessing the configuration parameters with SY/MAX programming software, using TREAD and TWRITE **through serial ports 2, 3, and 4**.

This chapter explains the configuration table and each of the ways of setting the communication parameters.

3.2 Device Address

The Gateway's device address is selected with the lower dip switch on the back of the Gateway. This dip switch determines the Modbus Plus address of the Gateway as described in detail in *Modicon BM85 Modbus Plus Bridge/Multiplexer User's Guide* (890 USE 103 00). For example, Figure 5 illustrates setting the node address to 6. The address is determined from left to right; that is, the LSB bit is on the left, where **Up** corresponds to 1 and **Down** corresponds to 0. To determine the Modbus Plus node address, add 1 to the switch setting.

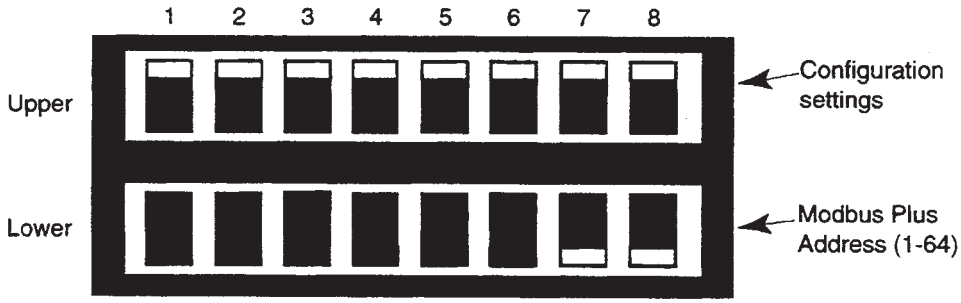

Figure 5 Device Address Setting

Using the previous device address of 6, the four Gateway serial ports would be assigned a different SY/MAX address as shown in Table 1:

Table 1 Port Address Settings

Port	SY/MAX Address of Port	Address Example, Based On Gateway Modbus Plus Address 6
1	Modbus Plus Address	6
2	Modbus Plus Address + 100	106
3	Modbus Plus Address + 1	7
4	Modbus Plus Address + 101	107

The four ports are still addressed by port numbers from Modbus Plus (that is, port 1 is still addressed as port 1).

3.3 Configuration Registers

The SY/MAX-Modbus Plus Gateway contains 36 configuration registers, some of which are read-only. Any serial port that uses SY/MAX or Modbus Plus can read and write these registers.

The configuration registers of the Gateway are shown in Table 2. Registers 4-7/40004-40007 and 20-36/40020-40036 will be stored permanently to flash memory in configuration mode only. In protocol conversion mode, registers 4-7/40004-40007 are not writable. All other registers are writable as indicated in Table 2, and any new parameters take effect for the next communication transaction. However, no parameters can be saved to flash memory in protocol conversion mode, that is, after a power-cycle, the Gateway defaults to the configuration in flash memory or the default configuration according to dip switch 5.

Table 2 Configuration Register Assignment

Register Address		Access Rights	Description
SY/MAX	Modicon		
1	40001	Read Only	Network Interface Module Type Example: 32816. for Modbus Plus to SY/MAX Gateway
2	40002	Read Only	Software Revision
3	40003	Read Only	Modbus Plus Network Address 01 - 64 (copy of Modbus Plus Address Switch + 1)
4	40004	Read/Write	Port 1 Configuration (writable in configuration mode only)
5	40005	Read/Write	Port 2 Configuration (writable in configuration mode only)
6	40006	Read/Write	Port 3 Configuration (writable in configuration mode only)
7	40007	Read/Write	Port 4 Configuration (writable in configuration mode only)
8	40008	Read Only	Serial port # - A message originating from the COMM port indicates the port (0-3) from which it came. A message originating from the network ignores returned data.
9	40009	Read Only	Partitioned broadcast Port 0 address (always 0)
10	40010	Read Only	Partitioned broadcast Port 1 address (always 0)
11	40011	Read Only	Partitioned broadcast Port 2 address (always 0)
12	40012	Read Only	Partitioned broadcast Port 3 address (always 0)
13	40013	Read/Write	Number of Modbus Plus Receive Errors (0-65535)
14	40014	Read/Write	Number of Modbus Plus Transmit Errors (0-65535)
15	40015	Read/Write	Modbus Plus Receive Error Overflow from Register 40013 (0-65535)
16	40016	Read/Write	Modbus Plus Transmit Error Overflow from Register 40014 (0-65535)
17	40017	Read/Write	User defined, cleared upon power-up, values from 0 - 65536
18	40018	Read/Write	User defined, cleared upon power-up, values from 0 - 65536
19	40019	Read/Write	User defined, cleared upon power-up, values from 0 - 65536

Table 2 Configuration Register Assignment

Register Address		Access Rights	Description
SY/MAX	Modicon		
20	40020	Read Only	Special PowerLogic NIM identification number. Programmable from 0 to 255. Defaults to zero on power-up. Any new values written to this register in protocol conversion model take effect on the next transmission.
21	40021	Read Only	Port 1 - Cable Status, indicates CTS response to RTS (0 = no CTS returned 255 = CTS is raised). Any new values written to this register in protocol conversion mode take effect on the next transmission.
22	40022	Read Only	Port 1 - Clear To Send (CTS) delay. Programmable from 0 to 2 seconds in 50 millisecond increments. On power-up defaults to a value of 0 (for no delay). Will delay issuing a CTS signal by the amount of time dictated by the value in this register times 50 (ms). Any new values written to this register in protocol conversion mode will take effect on the next transmission.
23	40023	Read Only	Port 1 - Message response time-out. Determines the time allotted for a response before the message is retransmitted (up to three times. see register 24). Programmable. Register values of 2 to20 give time-outs of 2 to 20 seconds. Register values of 10 to 100 give time-outs of 100 to 1000 milliseconds. After 3retries an error is generated. (Default = 2 seconds.) Any new values written to this register in protocol conversion mode take effect on the next transmission.
24	40024	Read/Write	Port 1 - Number of retries by a PNIM (when no response is received from the intended circuit monitor), before an error message is posted in the status register of the communication rung initiating the communication command (READ/WRITE). On power-up, the default value is 0. Allowable value range is 0 to 3. Any new values written to this register in protocol conversion mode take effect on the next transmission.
25	40025	Read/Write	Port 2 - Cable Status, indicates CTS response to RTS (0 = no CTS returned 255 = CTS is raised). Any new values written to this register in protocol conversion mode take effect on the next transmission.
26	40026	Read/Write	Port 2 - Clear To Send (CTS) delay, Programmable from 0 to 2 seconds in 50 millisecond increments. On power-up defaults to a value of 0 (for no delay). Will delay issuing a CTS signal by the amount of time dictated by the value in this register times 50 (ms). Any new values written to this register in protocol conversion mode take effect on the next transmission.

Table 2 Configuration Register Assignment

Register Address		Access Rights	Description
SY/MAX	Modicon		
27	40027	Read/Write	Port 2 - Message response time-out. Determines the time allotted for a response before the message is retransmitted (up to three times, see register 28). Programmable. Register values of 2 to 20 give time-outs of 2 to 20 seconds. Register values of 10 to 100 give time-outs of 100 to 1000 milliseconds. After 3 retries an error is generated. (Default = 2 seconds.) Any new values written to this register in protocol conversion mode take effect on the next transmission.
28	40028	Read/Write	Port 2 - Number of retries by a PNIM (when no response is received from the intended circuit monitor), before an error message is posted in the status register of the communication rung initiating the communication command (READ/WRITE). On power-up, the default value is 0. Allowable value range is 0 to 3. New values written to this register in protocol conversion mode take effect on the next transmission.
29	40029	Read/Write	Port 3 - Cable Status, indicates CTS response to RTS (0 = no CTS returned; 255 = CTS is raised). Any new values written to this register in protocol conversion mode take effect on the next transmission.
30	40030	Read/Write	Port 3 - Clear To Send (CTS) delay. Programmable from 0 to 2 seconds in 50 millisecond increments. On power-up defaults to a value of 0 (for no delay). Will delay issuing a CTS signal by the amount of time dictated by the value in this register times 50 (ms). Any new values written to this register in protocol conversion mode take effect on the next transmission.
31	40031	Read/Write	Port 3 - Message response time-out. Determines the time allotted for a response before the message is retransmitted (up to 3 times, see register 32). Programmable. Register values of 2 to 20 give time-outs of two to twenty seconds. Register values of 10 to 100 give time-outs of 100 to 1000 milliseconds. After 3 retries an error is generated. (Default = 2 seconds.) Any new values written to this register in protocol conversion mode take effect on the next transmission.

Table 2 Configuration Register Assignment

Register Address		Access Rights	Description
SY/MAX	Modicon		
32	40032	Read/Write	Port 3 - Number of retries by a PNIM (when no response is received from the intended circuit monitor), before an error message is posted in the status register of the communication rung initiating the communication command (READ/WRITE). On power-up, the default value is 0. Allowable value range is 0 to 3. New values written to this register in protocol conversion mode take effect on the next transmission.
33	40033	Read Only	Port 4 - Cable Status, indicates CTS response to RTS (0 = no CTS returned; 255 = CTS is raised). Any new values written to this register in protocol conversion mode take effect on the next transmission.
34	40034	Read/Write	Port 4 - Clear To Send (CTS) delay. Programmable from 0 to 2 seconds in 50 millisecond increments. On power-up defaults to a value of 0 (for no delay). Will delay issuing a CTS signal by the amount of time dictated by the value in this register times 50 (ms). Any new values written to this register in protocol conversion mode take effect on the next transmission.
35	40035	Read/Write	Port 4 - Message response time-out. Determines the time allotted for a response before the message is retransmitted (up to 3 times, see register 36). Programmable. Register values of 2 to 20 give time-outs of 2 to 20 seconds. Register values of 10 to 100 give time-outs of 100 to 1000 milliseconds. After 3 retries an error is generated. (Default = 2 seconds.) Any new values written to this register in protocol conversion mode take effect on the next transmission.
36	40036	Read/Write	Port 4 - Number of retries by a PNIM (when no response is received from the intended circuit monitor), before an error message is posted in the status register of the communication rung initiating the communication command (READ/WRITE). On power-up, the default value is 0. Allowable value range is 0 to 3. New values written to this register in protocol conversion mode take effect on the next transmission.

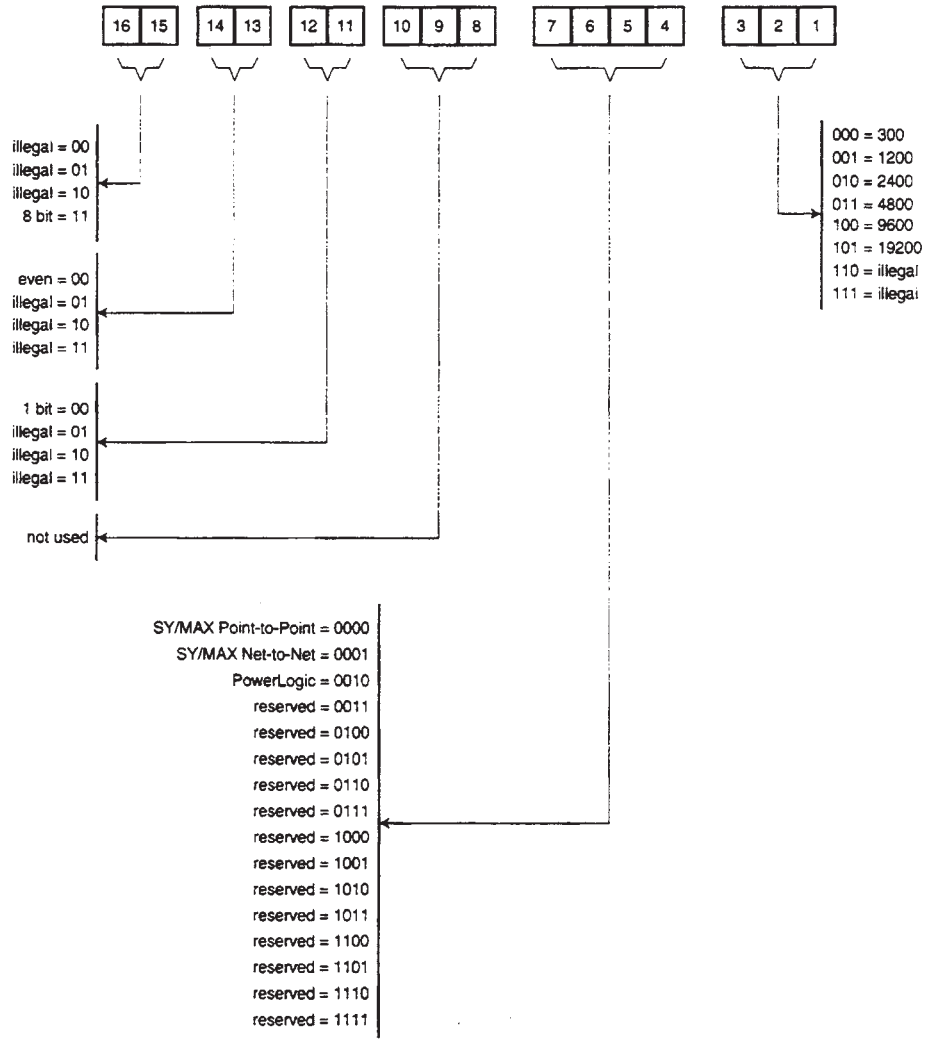

Figure 6 Port Configuration Registers

3.3.1 Port Configuration Registers

The SY/MAX - Modbus Plus Gateway supports the following SY/MAX protocols on all four serial ports:

- SY/MAX Point-to-Point
- SY/MAX Net-to-Net
- PowerLogic NIM

The Port Configuration Setting register format is shown in the following figure. When accessing these registers with SY/MAX or Modbus Plus protocols, the bits for type of protocol, baud rate, and so forth, are interpreted as shown in Figure 6.

3.3.2 Configuration Register Access - PC/ASCII Terminal

The Gateway configuration can also be edited and saved using a PC with terminal emulation software, or an ASCII terminal, on port 1 of the Gateway. The Gateway displays the menu shown in Figure 7. **Default communication parameters** are **9600 baud, even parity, 8 data bits, 1 stop bit**.

Parameters for all four ports can be edited by first selecting the port to be changed, as the active port, and then editing the desired parameters. The active port is always encompassed by the ACTIVE frame, as well as indicated at the prompt. Once the configuration has been edited, it must be saved to flash memory with option (9) for it to be effective in protocol conversion mode.

☞ **Note:** Only communications to the configuration registers are valid and translated while in the configuration mode. No communications occur between Modbus Plus and devices on the four serial ports in that mode.

```
BM85W422 Modbus Plus-SY/MAX Network Interface Module - Version 1.00
MB+ Node Address:  6

 1) Change Active Port        +--------+
                              | PORT 1 |   PORT 2     PORT 3     PORT 4
                              | 9600   |   9600       9600       9600
 2) Baud Rate                 | E      |   E          E          E
    Parity                    | 8      |   8          8          8
    Data Bits                 | 1      |   1          1          1
    Stop Bits                 | P-to-P |   P-to-P     BMM        BMM
 3) Protocol                  | 2   s  |   2   s      2   s      2   s
 4) Response Timeout          | 0   ms |   0   ms     0   ms     0   ms
 5) CTS Delay                 | 0      |   0          0          0
 6) Number of Retries         + ACTIVE +

 7) Load Configuration from Flash Memory
 8) Load Default Configuration

 9) Save Configuration to Flash Memory


Active Port:   1  >>
```

Figure 7 Configuration Register Access - PC/ASCII Terminal

3.3.3 Configuration Register Access - Modbus Plus

The 36 configuration registers can be read and written by using path 5 of the Gateway. This path routes a Modbus Plus command to the configuration registers instead of pass-through to SY/MAX. While all 36 registers can be read, only the read and write registers shown in Table 2 on page 10 can be written. Whenever one or more registers are written in configuration mode, the current configuration is saved to the Gateway's flash memory.

Example

If the Gateway has Modbus Plus node address 6 (refer to *Modicon BM85 Modbus Plus Bridge/Multiplexer User's Guide* (890 USE 103 00) for setting this address), the 36 configuration registers can be read with the following MSTR function block in a Modicon controller. This reading can occur only if the controller and the Gateway are located on the same Modbus Plus network. For information on advanced Modbus Plus routing, refer to *Modicon Modbus Plus Network Planning and Installation Guide* (890 USE 103 00).

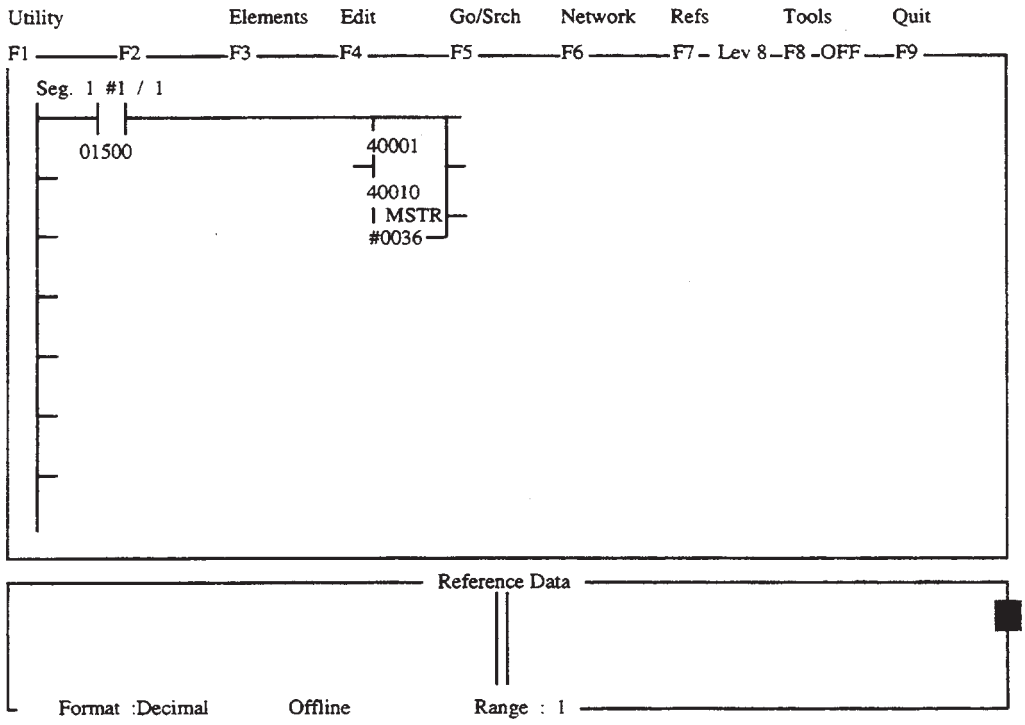

Figure 8 Configuration Register Access - Modbus Plus

The template for the MSTR function block is set up as follows:

```
Utility                Hex        Dec        Bin        Goto                                    Quit
F1 ———————F2 ———————F3 ———————F4 ——— DX Zoom Editor ———————F7 – Lev 8 –F8 –OFF ——F9 ———————
                        MSTR:  Modbus Plus Network Node Transaction                    Page 1 / 1

     MSTR Operation Function Code:          40001   INT   =  2                          DEC
     Error Status  (Read-Only):             40002   INT   =  0000                       HEX
     Number of Registers Transferred:       40003   INT   =  36                         DEC
     Function-dependent Information:        40004   INT   =  1                          DEC
     Routing 1, Destination Device Address: 40005   INT   =  6                          DEC
     Routing 2, Destination Device Address: 40006   INT   =  5                          DEC
     Routing 3, Destination Device Address: 40007   INT   =  0                          DEC
     Routing 4, Destination Device Address: 40008   INT   =  0                          DEC
     Routing 5, Destination Device Address: 40009   INT   =  0                          DEC

     Function Codes:
     1 - > WRITE DATA                       2 - > READ DATA
     3 - > GET LOCAL STATISTICS             4 - > CLEAR LOCAL STATISTICS
     5 - > WRITE GLOBAL DATABASE            6 - > READ GLOBAL DATABASE
     7 - > GET REMOTE STATISTICS            8 - > CLEAR REMOTE STATISTICS
     9 - > PEER COP HEALTH
```

Figure 9 Configuration Register Access - Modbus Plus

MSTR Operation Function Code	1 = write to Gateway configuration registers 2 = read from Gateway configuration registers
Number of Registers Transferred	Number of configuration registers read/written
Function-dependent Information	Address of configuration register to be read/written (1 = 40001, 2 = 40002, etc.)
Routing 1	Gateway's Modbus Plus node address (1-64, 6 in this case)
Routing 2	Gateway's configuration path (5)
Routing 3-5	Unused
Error Status (Read-Only)	Result code returned by the Gateway, indicating the success or failure of the operation. Table 6-1 illustrates the error status.

3.3.4 Configuration Registers Access - SY/MAX

It is also possible to perform configuration from serial ports 2, 3, and 4 of the Gateway while in the configuration mode. The 36 configuration registers of the Gateway can be read and written to by using SY/MAX Advance route of 200. The "ROUTE 200" must be the second from the last ROUTE entry. Whenever one or more registers are written in configuration mode, the current configuration is saved to the Gateway's flash memory.

Example This example assumes that a SY/MAX controller is connected to the Gateway with an address of 20 and the operation is to read the configuration registers. The SY/MAX controller is connected to port 3 which is configured for point-to-point. The Port 3 SY/MAX address would be 21 (device address + 1). The 36 Gateway configuration registers S0001 through S0036 are read and stored every time R0500-01 is set to (1).

☞ **Note:** SY/MAX Advance route of 204 is skipped in the routing process. For more information on SY/MAX routing conventions and special function routes 200, 201, and 204, refer to the appropriate SY/MAX controller manuals.

```
ONLINE/LADDER                    ROUTE:010 023
  R0500
                 ROUTE -ROUTE -ROUTE -ROUTE - STAT -LOCAL -REMOTE-COUNT
 ---| |---TREAD1  021    200    021    204   S1200  S1201  S0001  036
   01                                         00000  00000

 Rung: 0007          Total Rungs: 0007          Words Used: 00057     Words Avail: 16327

FTRACE  F        F      F     POLL   F       F        F       F     F EDITOR  F 10
1SEARCH 2CREATE  3 EDIT 4     OFF    5       6 DELETE 7 FORCE 8     9 SETUP   LOAD
```

Figure 10 TREAD for SY/MAX Controller

Protocol Conversion

4

4.1 General Information

The SY/MAX - Modbus Plus Gateway device allows the user of a Modbus Plus device to send and receive data from SY/MAX devices, accessing it as a Modbus Plus device through the Gateway. Additionally, a user of SY/MAX devices can access and change information in Modbus Plus devices as if they were SY/MAX devices. Message routing and message translation are described in the following sections.

SY/MAX allows multiple outstanding commands to exist on a given communication port. However, since Modbus Plus protocol allows only a single outstanding command at any given time, the Gateway allows only one outstanding SY/MAX command at any given time, and returns Busy whenever a new command is received before the reply to the previous command has been sent.

Only commands for reading and writing register values are translated by the SY/MAX - Modbus Plus Gateway. Non-translatable SY/MAX commands are encapsulated in a Modbus message and transported via Modbus Plus protocol. The following section outlines the SY/MAX and Modbus commands that the SY/MAX - Modbus Plus Gateway supports, as well as their translation into the other domain.

In the protocol conversion mode registers S0020-S0036/40020-40036 can be written. The value is acted on immediately, but the changes are not saved to Flash memory. Permanent changes to these registers can only be made in the configuration mode.

4.2 Gateway Command Mapping

SY/MAX commands are mapped to Modbus Plus commands as shown in Table 3. Only commands for reading and writing register values, to or from SY/MAX devices, are translated by the Gateway device. All remaining SY/MAX commands are encapsulated.

For some SY/MAX commands, Modbus Plus protocol uses an encapsulated command. In this case, another Gateway connected via a Modbus Plus link back-to-back to the first Gateway must translate the encapsulated command back to a SY/MAX command. This allows users, for example, to communicate with PowerLogic meters from Modicon controllers, yet remain able to use the PowerLogic software to connect to the meters directly.

Table 3 SY/MAX - Modbus Command Mapping

SY/MAX Command	Modbus Plus Command
Priority Read Command	Read Preset Holding Registers 4x
Priority Write Command	Write Preset Holding Registers 4x
Non-Priority Read Command, Register Addresses 8192	Read Preset Holding Registers 4x
Non-Priority Read Command, Register Addresses > 8192	Encapsulated command, requires another Gateway back-to-back to this Gateway, to translate the request back to a SY/MAX command
Non-Priority Write Command, Register Addresses 8192	Write Preset Holding Registers 4x
Non-Priority Write Command, Register Addresses > 8192, or Bit Mask unequal FFFF hex	Encapsulated command, requires another Gateway back-to-back to this Gateway, to translate the request back to a SY/MAX command
All other SY/MAX commands	Encapsulated command, requires another Gateway back-to-back to this Gateway, to translate the request back to a SY/MAX command

4.3 Gateway Register Mapping

SY/MAX Registers S0001 - S8192 are mapped to Modicon holding registers 40001 - 48192. Request to read or write beyond this range results in the command being encapsulated and requires an additional Gateway back-to-back to translate the command or an error is returned to the requesting device. See Chapter 6 for more information on error codes.

☞ **Note:** When performing a READ or WRITE operation from a SY/MAX device, the maximum number of registers that can be transferred with the Gateway device is 125.

4.4 Routing SY/MAX - Modbus Plus Messages

The Gateway device supports Modbus Plus routing conventions. That is, the Gateway allows a maximum of 5 routes. Modbus Plus routing interprets network node address zero to be the end of the route information. In a SY/MAX network, zero is a legal network address. The Gateway allows the use of existing SY/MAX node addresses of zero by allowing the user to enter 255 for that node address. The Gateway then processes the route as a valid route.

Modbus Plus to SY/MAX Point-to-Point

A single SY/MAX device connected to the Gateway serial port (running SY/MAX Point-to-point protocol) as shown in Table 3 on page 22, is addressed from the Modbus Plus network using two routes. The next-to-last nonzero route addresses the Gateway node, that is, the device address (range: 1 ... 64). The last nonzero route specifies the port (range: 1 ... 4) to which the SY/MAX device is attached. Specifying the port automatically addresses the device at that port.

Example

Figure 11 shows a SY/MAX - Modbus Plus Gateway at node address **25** on a local network; the route **25.2.0.0.0** directs the message to the single SY/MAX device at port **2** of the Gateway. If the messages originated at the SY/MAX device, the route would be **125.10.0.0.0**

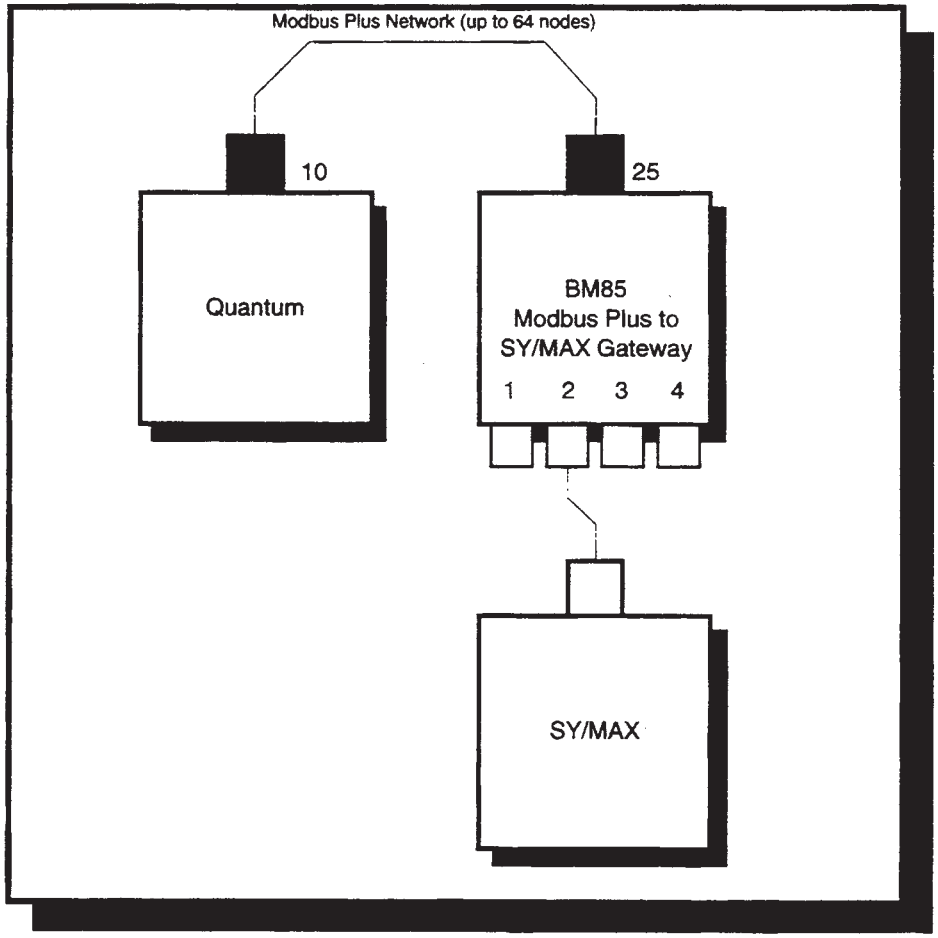

Figure 11 Modbus Plus to SY/MAX Point-to-Point

For more information on SY/MAX routing conventions, refer to the appropriate SY/MAX controller manuals.

Modbus Plus to SY/MAX Net-to-Net

The routing from a Modbus Plus device to a SY/MAX networked device connected to a Gateway serial port (running SY/MAX net-to-net protocol), as shown in Figure 12, is addressed using three routes. The third-from-last nonzero route addresses the Gateway node (range: 1 ... 64). The second-from-last nonzero route specifies the port (range: 1 ... 4) to which a SY/MAX NIM is attached. The last nonzero route is the address of the SY/MAX device (range: 0 ... 199) on the SY/NET network connected to the NIM..

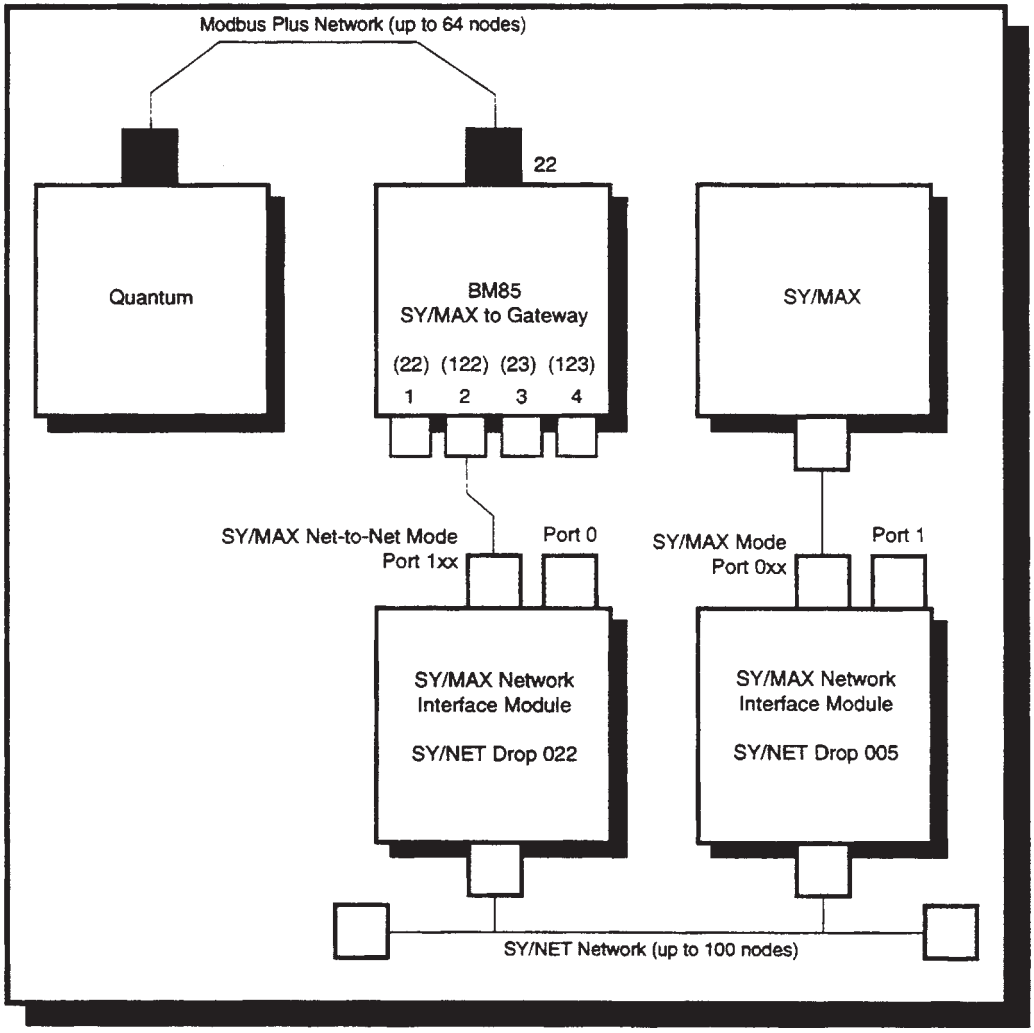

Figure 12 Modbus Plus to SY/MAX Net-To-Net

Note: Set the NIM address to the same value as the Gateway address; the NIM and Gateway should be configured for net-to-net operation. For example, 22.2.5.0.0 routes a message to Gateway node address 22, serial port 2, SY/NET NIM address 22, serial port address 022 and SY/MAX device 5. Ports 3 and 4 have 1 added to the Modbus Plus address and the NIMs attached to them must be set to the Modbus Plus address plus 1.

The routing from the SY/MAX device on a SY/NET network addresses a Modbus Plus device as follows. The first route must be either the address of the SY/MAX NIM port to which it is connected or a Special Function "ROUTE 201". The next route entry is the address of a NIM connected to the SY/MAX - Modbus Plus Gateway. The remaining route entries follow the Modbus Plus routing conventions to arrive at the final device.

For more information on SY/MAX routing conventions, refer to the SY/MAX controller manuals.

Modbus Plus to PowerLogic (PNIM)

A networked SY/MAX device (for example, a PowerLogic circuit monitor) connected to a Gateway serial port (configured for SY/MAX PNIM protocol) as shown in Figure 13, is addressed from the Modbus Plus network using three routes. The third-from-last nonzero route addresses the Gateway node (range: 1 ... 64). The second-from-last nonzero route specifies the port (range: 1 ... 4) to which a network of circuit monitors is attached. The last nonzero route is the address of the circuit monitor device (range: 1 ... 199). For example, **25.2.5.0.0** routes a message from the Quantum to Gateway at node address **25**, serial port **2**, circuit monitor **5**..

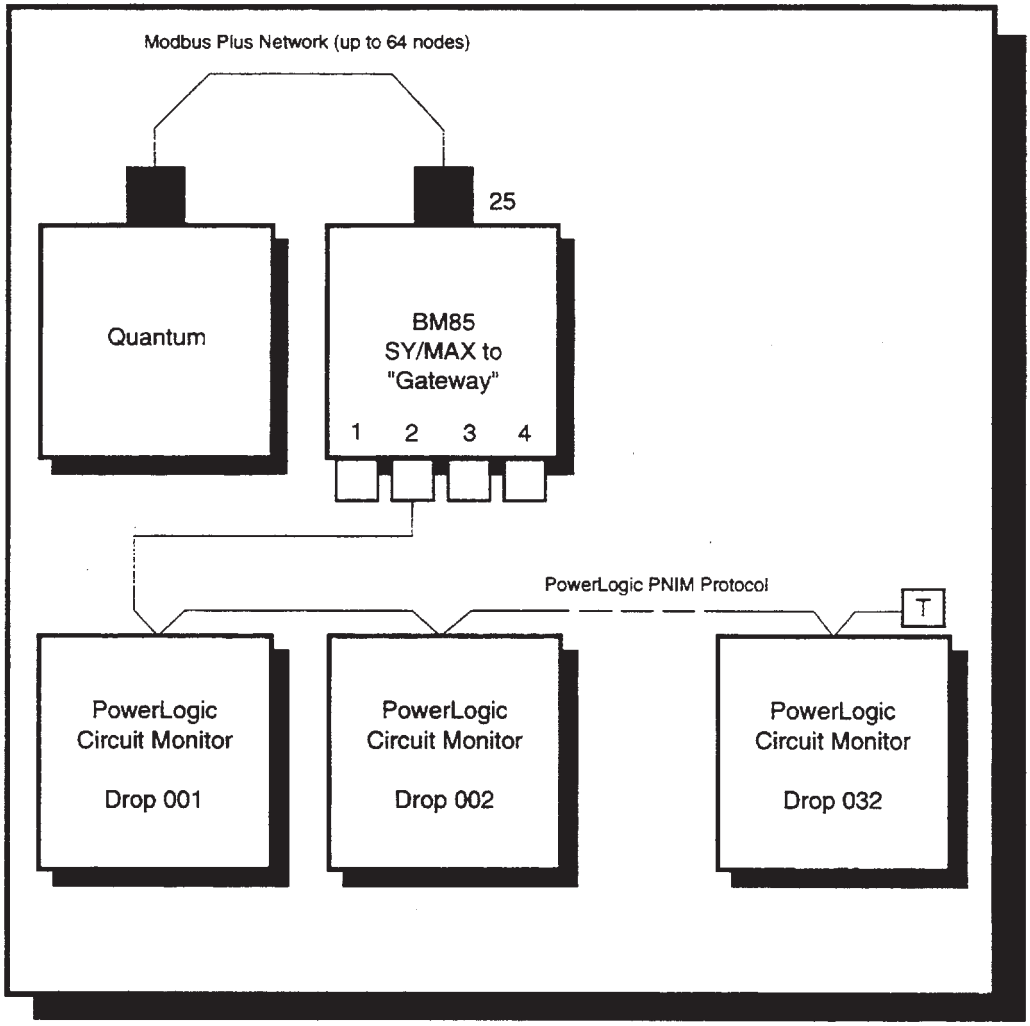

Figure 13 PowerLogic PNIM Protocol

4.5 Advanced Communications Routing

In addition to routing point-to-point with Network Device Numbers 000 through 199, SY/MAX protocol provides for special function routes numbered **200**, **201**, and **204**. Table 4 lists special routes that the Gateway supports.

Table 4 Special Function Routes

ROUTE	SPECIAL FUNCTION
200	READ and WRITE configuration registers
201	Source's network number is unknown
204	DON'T CARE, go to next

For more information on SY/MAX routing conventions and special function routes, refer to the appropriate SY/MAX controller manuals.

Communication Examples

5

This chapter provides SY/MAX-Modbus Plus communication examples, specifically how commands are routed through complex SY/MAX and Modbus Plus network architectures. Please also refer to SY/MAX and Modbus Plus controller manuals for routing information. All scenarios are based on the following network architecture. Any device routing not shown in Table 5 can be derived from the patterns in the table.

Figure 14 on page 32 illustrates a sample network configuration.

Table 5 SY/MAX - Modbus Plus Examples

Communicating Devices		Route from First Device to Second Device (A to B)	Route from Second Device to First Device (B to A)
Device A	**Device B**		
Quantum controller A	PowerLogic Circuit Monitor G	31.23.4.1.0	[not applicable, PowerLogic Circuit Monitors are slaves]
Quantum controller A	PowerLogic Circuit Monitor J	31.26.1.1.0	[not applicable, PowerLogic Circuit Monitors are slaves]
Quantum controller A	SY/MAX controller K	31.26.3.0.0	027 037 014
Quantum controller A	SY/MAX controller N	31.23.2.23.0	023 123 037 014
Quantum controller A	SY/MAX controller O	31.23.2.100.0	100 123 037 014

Table 5 SY/MAX - Modbus Plus Examples

Communicating Devices		Route from First Device to Second Device (A to B)	Route from Second Device to First Device (B to A)
Device A	**Device B**		
Quantum controller A	SY/MAX controller P	31.23.2.255.0 Note: Since 0 terminates a Modbus Plus route, 255 must be used to address the SY/MAX device with address 0.	000 123 037 014
Host PC with SA85 Card B	PowerLogic Circuit Monitor G	23.4.1.0.0	[not applicable, PowerLogic Circuit Monitors are slaves]
Host PC with SA85 Card B	PowerLogic Circuit Monitor J	26.1.1.0.0	[not applicable, PowerLogic Circuit Monitors are slaves]
Host PC with SA85 Card B	SY/MAX controller K	26.3.0.0.0	027 002 001 Note: Modbus Plus host devices, such as the SA85 card, or the BM85C, require a path number between 1 and 4 after the device's Modbus Plus address.
Host PC with SA85 Card B	SY/MAX controller N	23.2.23.0.0	023 123 002 002
Host PC with SA85 Card B	SY/MAX controller O	23.2.100.0.0	100 123 002 003
Host PC with SA85 Card B	SY/MAX controller P	23.2.255.0.0	000 123 002 004
Quantum controller C	PowerLogic Circuit Monitor H	23.4.2.0.0	[not applicable, PowerLogic Circuit Monitors are slaves]
Quantum controller C	PowerLogic Circuit Monitor J	26.1.1.0.0	[not applicable, PowerLogic Circuit Monitors are slaves]
Quantum controller C	SY/MAX controller K	26.3.0.0.0	027 012
Quantum controller C	SY/MAX controller N	23.2.23.0.0	023 123 012
Quantum controller C	SY/MAX controller O	23.2.100.0.0	100 123 012
Quantum controller C	SY/MAX controller P	23.2.255.0.0	000 123 012

Table 5 SY/MAX - Modbus Plus Examples

Communicating Devices		Route from First Device to Second Device (A to B)	Route from Second Device to First Device (B to A)
Device A	**Device B**		
SY/MAX controller K	PowerLogic Circuit Monitor I	027 023 004 032	[not applicable, PowerLogic Circuit Monitors are slaves]
SY/MAX controller K	PowerLogic Circuit Monitor J	[not accessible, port-to-port routing not possible]	[not applicable, PowerLogic Circuit Monitors are slaves]
SY/MAX controller K	SY/MAX controller N	027 023 002 023	023 123 026 003
SY/MAX controller K	SY/MAX controller O	027 023 002 100	100 123 026 003
SY/MAX controller K	SY/MAX controller P	027 023 002 255	000 123 026 003
PC with SY/MATE Plus L	Quantum controller C	127 012 Note: With <F1> *PLC Online* and <F2> *Data Screen*, SY/MATE Plus can be used to read and write 4x registers in a Modicon controller.	[not applicable]
PC with PowerLogic Software M	PowerLogic Circuit Monitor I	026 126 023 004 032	[not applicable, PowerLogic Circuit Monitors are slaves]
Quantum controller C	SY/MAX - Modbus Plus Gateway Configuration E	23.5.0.0.0 Note: This route allows the Modicon controller to read and write the Gateway's configuration registers.	[not applicable]
SY/MAX controller K	SY/MAX - Modbus Plus Gateway Configuration F	027 200 027 Note: This route allows the Modicon controller to read and write the Gateway's configuration registers.	[not applicable]
SY/MAX controller N	SY/MAX - Modbus Plus Gateway Configuration E	023 123 200 123 Note: This route allows the SY/MAX controller to read and write the Gateway's configuration registers.	[not applicable]
Quantum controller C	SY/MAX controller P	023 003 255 0 0	000 024 012

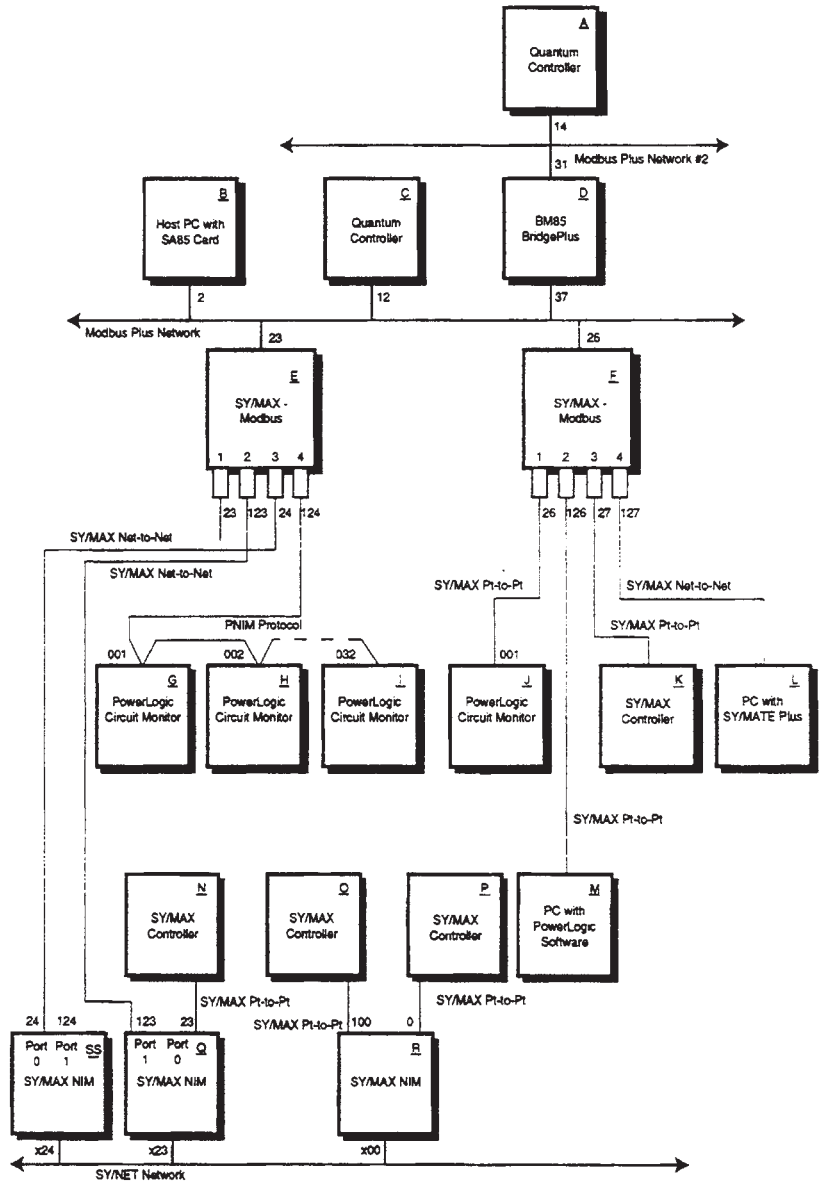

Figure 14 Network Example

Error Codes

6

The SY/MAX - Modbus Plus Gateway returns the standard error codes as defined for Modbus Plus and SY/MAX communications. Refer to the appendix material in the SY/MAX controller instruction bulletins for more information on error codes.

Table 6 SY/MAX Error Codes

Error Code (decimal)	Possible Error
1	Initiating SY/MAX device used an illegal op code which cannot be processed by the Gateway.
3	Initiating SY/MAX device tried to access a register with an out-of-range register address. When using priority commands, only registers S0001 through S8192 are legal. For non-priority commands, embedded Modbus Plus commands are used when addresses higher than S8192 are used.
17	Remote (Modbus Plus) device is inactive. Check the following: •Integrity of all cable between source and destination •All communication parameters between source, destination, and all intermediate nodes must match •Route selected to travel from source to destination must use valid routing information •Route selected to travel from source to destination must match device node addresses in the network •Destination device may be configured with wrong address •Destination device's software may not be set up for desired communication, or required software is not running •Destination device may have hardware failure •Another device on the network may be programmed wrong, interfering with the operation of otherwise correctly programmed network communication

Table 6 SY/MAX Error Codes

Error Code (decimal)	Possible Error
29	Illegal route. Consult the preceding example and SY/MAX routing bulletins for correct routing. Note: If the Gateway is in configuration mode, only read/write of the internal configuration registers is allowed, i.e., route 200 must be used. Otherwise an error is returned.
41	Either attempt to write a read-only register in the Gateway configuration or configuration parameter to be written to the Gateway configuration was an illegal value. An example of such an illegal value is an illegal baud rate or CTS Delay. Refer to the above configuration table for valid ranges.
83	SY/MAX supports longer data packets than Modbus Plus. Only SY/MAX commands with a length of up to 100 registers for a write command (200 bytes) or 125 registers (bytes) for a read command, can be processed and/or embedded when either communicating to Modbus Plus devices, or across Modbus Plus from a PowerLogic or SY/MATE host to a PowerLogic Circuit Monitor or SY/MAX controller.

Table 7 Modbus Plus Error Codes
(for MSTR Function Block of Modicon 984 Modbus Plus Controller)

Error Code (hex)	Possible Error
3001	Initiating Modbus Plus device used an illegal op code which cannot be processed by the Gateway.
3002	Initiating Modbus Plus device tried to access a register with an out-of-range register address. Only registers 40001 through 8192 are legal.
3003	A configuration parameter to be written to the Gateway configuration was an illegal value, such as illegal Baud rate, CTS Delay, etc. Refer to the above configuration table for valid ranges.
3010	One or more of the configuration registers to be written are read-only.

Table 7 Modbus Plus Error Codes
(for MSTR Function Block of Modicon 984 Modbus Plus Controller)

Error Code (hex)	Possible Error
6*mss*	Routing or communication failure. *"m"* subfield in the error code indicates at which node the error occurred (0 = local node, 2 = second device in route). Note that even if the communication or routing error occurs in a SY/MAX device several routes away, *"m"* is set to the Modbus Plus device that first detects the communication or routing error due to either the SY/MAX response or the lack thereof. *"ss"* subfield indicates the type of error. 01 No response received 08 Illegal route Use the following list to check for errors: •Integrity of all cable between source and destination •All communication parameters between source, destination, and all intermediate nodes must match •Route selected to travel from source to destination must use valid routing information •Route selected to travel from source to destination must match device node addresses in the network •Destination device may be configured with wrong address •Destination device's software may not be set up for desired communication, or required software is not running •Destination device may have hardware failure •Another device on the network may be programmed wrong, interfering with the operation of otherwise correctly programmed network communication For other error codes, refer to appropriate Modicon documentation.

Note: If writing to Read Only register (Input Modules), Error 6X01 is returned.

Modem Requirements

7

The SY/MAX - Modbus Plus Gateway can also be used with modems. ***Note that the modem is only supported on port 4.*** The use of a Hayes-compatible modem is recommended.

- DCE Rate 9600 Uncoded
- Originate/Force Answer (depending on location)
- V.32b Fast Train Enabled
- Auto Retrain Disabled
- Square Auto Rate Disabled
- Internal Clock
- Dial Tx Level - 10dB
- Dial Mode
- RJ11 Jack
- Line Current Disconnect Disabled
- Long Space Disconnect Disabled
- V.22 Guard Tone Disabled

Protocol Options

- LAPM Protocol Disabled
- MNP Protocol Disabled
- Buffer Direct
- DTE Flow Xon/Xoff
- DCE Flow Xon/Xoff
- Xon/Xoff Passthru Enabled
- Inactivity Timer Off
- Break Option #5
- V.42 Fast Detect Enabled

DTE Options

- Asynchronous
- DTE Rate 9600
- Eight Bit Char Size
- Even Parity
- DTR Controlled Dialer
- AT Command Set Disabled
- Ignore DTR
- DSR High
- DCD High
- CTS High
- DTE Fallback Disabled
- Options Retained at Disconnect