MiCOM P241, P242 & P243

Rotating Machine Protection Relay

P24x/EN M/C52

Software Version 57
Hardware Suffix J (P241) & K (P242/P243)

Technical Manual

Schneider Electric

Note: The technical manual for this device gives instructions for its installation, commissioning, and operation. However, the manual cannot cover all conceivable circumstances or include detailed information on all topics. In the event of questions or specific problems, do not take any action without proper authorization. Contact the appropriate Schneider Electric technical sales office and request the necessary information.

Any agreements, commitments, and legal relationships and any obligations on the part of Schneider Electric including settlements of warranties, result solely from the applicable purchase contract, which is not affected by the contents of the technical manual.

This device MUST NOT be modified. If any modification is made without the express permission of Schneider Electric, it will invalidate the warranty, and may render the product unsafe.

The Schneider Electric logo and any alternative version thereof are trademarks and service marks of Schneider Electric.

All trade names or trademarks mentioned herein whether registered or not, are the property of their owners.

This manual is provided for informational use only and is subject to change without notice.

© 2010, Schneider Electric. All rights reserved.

CONTENTS

	Safety Section	P24x/EN SS/G11
Section 1	Introduction	P24x/EN IT/C52
Section 2	Technical Data	P24x/EN TD/C52
Section 3	Getting Started	P24x/EN GS/C52
Section 4	Settings	P24x/EN ST/C52
Section 5	Operation	P24x/EN OP/C52
Section 6	Application Notes	P24x/EN AP/C52
Section 7	Programmable Logic	P24x/EN PL/C52
Section 8	Measurements and Recording	P24x/EN MR/C52
Section 9	Firmware Design	P24x/EN FD/C52
Section 10	Commissioning	P24x/EN CM/C52
Section 11	Maintenance	P24x/EN MT/C52
Section 12	Troubleshooting	P24x/EN TS/C52
Section 13	SCADA Communications	P24x/EN SC/C52
Section 14	Symbols and Glossary	P24x/EN SG/C52
Section 15	Installation	P24x/EN IN/C52
Section 16	Firmware and Service Manual Version History	P24x/EN VH/C52

SAFETY SECTION

SS

BLANK PAGE

CONTENTS

1.	INTRODUCTION	3
2.	HEALTH AND SAFETY	3
3.	SYMBOLS AND LABELS ON THE EQUIPMENT	4
3.1	Symbols	4
3.2	Labels	4
4.	INSTALLING, COMMISSIONING AND SERVICING	4
5.	DE-COMMISSIONING AND DISPOSAL	7
6.	TECHNICAL SPECIFICATIONS FOR SAFETY	8
6.1	Protective fuse rating	8
6.2	Protective class	8
6.3	Installation category	8
6.4	Environment	8

BLANK PAGE

1. INTRODUCTION

This Safety Section and the relevant equipment documentation provide full information on safe handling, commissioning and testing of this equipment. This Safety Section also includes reference to typical equipment label markings.

The technical data in this Safety Section is typical only, see the technical data section of the relevant equipment documentation for data specific to a particular equipment.

Before carrying out any work on the equipment the user should be familiar with the contents of this Safety Section and the ratings on the equipment's rating label.

Reference should be made to the external connection diagram before the equipment is installed, commissioned or serviced.

Language specific, self-adhesive User Interface labels are provided in a bag for some equipment.

2. HEALTH AND SAFETY

The information in the Safety Section of the equipment documentation is intended to ensure that equipment is properly installed and handled in order to maintain it in a safe condition.

It is assumed that everyone who will be associated with the equipment will be familiar with the contents of this Safety Section, or the Safety Guide (SFTY/4L M).

When electrical equipment is in operation, dangerous voltages will be present in certain parts of the equipment. Failure to observe warning notices, incorrect use, or improper use may endanger personnel and equipment and also cause personal injury or physical damage.

Before working in the terminal strip area, the equipment must be isolated.

Proper and safe operation of the equipment depends on appropriate shipping and handling, proper storage, installation and commissioning, and on careful operation, maintenance and servicing. For this reason only qualified personnel may work on or operate the equipment.

Qualified personnel are individuals who:

- Are familiar with the installation, commissioning, and operation of the equipment and of the system to which it is being connected;
- Are able to safely perform switching operations in accordance with accepted safety engineering practices and are authorized to energize and de-energize equipment and to isolate, ground, and label it;
- Are trained in the care and use of safety apparatus in accordance with safety engineering practices;
- Are trained in emergency procedures (first aid).

The equipment documentation gives instructions for its installation, commissioning, and operation. However, the manuals cannot cover all conceivable circumstances or include detailed information on all topics. In the event of questions or specific problems, do not take any action without proper authorization. Contact the appropriate Schneider Electric technical sales office and request the necessary information.

SS

3. SYMBOLS AND LABELS ON THE EQUIPMENT

For safety reasons the following symbols which may be used on the equipment or referred to in the equipment documentation, should be understood before it is installed or commissioned.

3.1 Symbols

Caution: refer to equipment documentation

Caution: risk of electric shock

Protective Conductor (*Earth) terminal

Functional/Protective Conductor (*Earth) terminal.

Note: This symbol may also be used for a Protective Conductor (Earth) Terminal if that terminal is part of a terminal block or sub-assembly e.g. power supply.

*__NOTE:__ THE TERM EARTH USED THROUGHOUT THIS TECHNICAL MANUAL IS THE DIRECT EQUIVALENT OF THE NORTH AMERICAN TERM GROUND.

3.2 Labels

See Safety Guide (SFTY/4L M) for typical equipment labeling information.

4. INSTALLING, COMMISSIONING AND SERVICING

Equipment connections

Personnel undertaking installation, commissioning or servicing work for this equipment should be aware of the correct working procedures to ensure safety.

The equipment documentation should be consulted before installing, commissioning, or servicing the equipment.

Terminals exposed during installation, commissioning and maintenance may present a hazardous voltage unless the equipment is electrically isolated.

The clamping screws of all terminal block connectors, for field wiring, using M4 screws shall be tightened to a nominal torque of 1.3 Nm.

Equipment intended for rack or panel mounting is for use on a flat surface of a Type 1 enclosure, as defined by Underwriters Laboratories (UL).

Any disassembly of the equipment may expose parts at hazardous voltage, also electronic parts may be damaged if suitable electrostatic voltage discharge (ESD) precautions are not taken.

If there is unlocked access to the rear of the equipment, care should be taken by all personnel to avoid electric shock or energy hazards.

Voltage and current connections shall be made using insulated crimp terminations to ensure that terminal block insulation requirements are maintained for safety.

Watchdog (self-monitoring) contacts are provided in numerical relays to indicate the health of the device. Schneider Electric strongly recommends that these contacts are hardwired into the substation's automation system, for alarm purposes.

To ensure that wires are correctly terminated the correct crimp terminal and tool for the wire size should be used.

The equipment must be connected in accordance with the appropriate connection diagram.

Protection Class I Equipment

- Before energizing the equipment it must be earthed using the protective conductor terminal, if provided, or the appropriate termination of the supply plug in the case of plug connected equipment.
- The protective conductor (earth) connection must not be removed since the protection against electric shock provided by the equipment would be lost.
- When the protective (earth) conductor terminal (PCT) is also used to terminate cable screens, etc., it is essential that the integrity of the protective (earth) conductor is checked after the addition or removal of such functional earth connections. For M4 stud PCTs the integrity of the protective (earth) connections should be ensured by use of a locknut or similar.

The recommended minimum protective conductor (earth) wire size is 2.5 mm² (3.3 mm² for North America) unless otherwise stated in the technical data section of the equipment documentation, or otherwise required by local or country wiring regulations.

The protective conductor (earth) connection must be low-inductance and as short as possible.

All connections to the equipment must have a defined potential. Connections that are pre-wired, but not used, should preferably be grounded when binary inputs and output relays are isolated. When binary inputs and output relays are connected to common potential, the pre-wired but unused connections should be connected to the common potential of the grouped connections.

Before energizing the equipment, the following should be checked:

- Voltage rating/polarity (rating label/equipment documentation);
- CT circuit rating (rating label) and integrity of connections;
- Protective fuse rating;
- Integrity of the protective conductor (earth) connection (where applicable);
- Voltage and current rating of external wiring, applicable to the application.

Accidental touching of exposed terminals

If working in an area of restricted space, such as a cubicle, where there is a risk of electric shock due to accidental touching of terminals which do not comply with IP20 rating, then a suitable protective barrier should be provided.

Equipment use

If the equipment is used in a manner not specified by the manufacturer, the protection provided by the equipment may be impaired.

Removal of the equipment front panel/cover

Removal of the equipment front panel/cover may expose hazardous live parts, which must not be touched until the electrical power is removed.

UL and CSA/CUL listed or recognized equipment

To maintain UL and CSA/CUL Listing/Recognized status for North America the equipment should be installed using UL and/or CSA Listed or Recognized parts for the following items: connection cables, protective fuses/fuseholders or circuit breakers, insulation crimp terminals, and replacement internal battery, as specified in the equipment documentation.

For external protective fuses a UL or CSA Listed fuse shall be used. The Listed type shall be a Class J time delay fuse, with a maximum current rating of 15 A and a minimum d.c. rating of 250 Vd.c. for example type AJT15.

Where UL or CSA Listing of the equipment is not required, a high rupture capacity (HRC) fuse type with a maximum current rating of 16 Amps and a minimum d.c. rating of 250 Vd.c. may be used, for example Red Spot type NIT or TIA.

Equipment operating conditions

The equipment should be operated within the specified electrical and environmental limits.

Current transformer circuits

Do not open the secondary circuit of a live CT since the high voltage produced may be lethal to personnel and could damage insulation. Generally, for safety, the secondary of the line CT must be shorted before opening any connections to it.

For most equipment with ring-terminal connections, the threaded terminal block for current transformer termination has automatic CT shorting on removal of the module. Therefore external shorting of the CTs may not be required, the equipment documentation should be checked to see if this applies.

For equipment with pin-terminal connections, the threaded terminal block for current transformer termination does NOT have automatic CT shorting on removal of the module.

External resistors, including voltage dependent resistors (VDRs)

Where external resistors, including voltage dependent resistors (VDRs), are fitted to the equipment, these may present a risk of electric shock or burns, if touched.

Battery replacement

Where internal batteries are fitted they should be replaced with the recommended type and be installed with the correct polarity to avoid possible damage to the equipment, buildings and persons.

Insulation and dielectric strength testing

Insulation testing may leave capacitors charged up to a hazardous voltage. At the end of each part of the test, the voltage should be gradually reduced to zero, to discharge capacitors, before the test leads are disconnected.

Insertion of modules and pcb cards

Modules and PCB cards must not be inserted into or withdrawn from the equipment whilst it is energized, since this may result in damage.

Insertion and withdrawal of extender cards

Extender cards are available for some equipment. If an extender card is used, this should not be inserted or withdrawn from the equipment whilst it is energized. This is to avoid possible shock or damage hazards. Hazardous live voltages may be accessible on the extender card.

External test blocks and test plugs

Great care should be taken when using external test blocks and test plugs such as the MMLG, MMLB and MiCOM P990 types, hazardous voltages may be accessible when using these. *CT shorting links must be in place before the insertion or removal of MMLB test plugs, to avoid potentially lethal voltages.

*Note: When a MiCOM P992 Test Plug is inserted into the MiCOM P991 Test Block, the secondaries of the line CTs are automatically shorted, making them safe.

Fiber optic communication

Where fiber optic communication devices are fitted, these should not be viewed directly. Optical power meters should be used to determine the operation or signal level of the device.

Cleaning

The equipment may be cleaned using a lint free cloth dampened with clean water, when no connections are energized. Contact fingers of test plugs are normally protected by petroleum jelly, which should not be removed.

5. DE-COMMISSIONING AND DISPOSAL

De-commissioning

The supply input (auxiliary) for the equipment may include capacitors across the supply or to earth. To avoid electric shock or energy hazards, after completely isolating the supplies to the equipment (both poles of any dc supply), the capacitors should be safely discharged via the external terminals prior to de-commissioning.

Disposal

It is recommended that incineration and disposal to water courses is avoided. The equipment should be disposed of in a safe manner. Any equipment containing batteries should have them removed before disposal, taking precautions to avoid short circuits. Particular regulations within the country of operation, may apply to the disposal of the equipment.

SS

6. TECHNICAL SPECIFICATIONS FOR SAFETY

Unless otherwise stated in the equipment technical manual, the following data is applicable.

6.1 Protective fuse rating

The recommended maximum rating of the external protective fuse for equipments is 16A, high rupture capacity (HRC) Red Spot type NIT, or TIA, or equivalent. The protective fuse should be located as close to the unit as possible.

DANGER - CTs must NOT be fused since open circuiting them may produce lethal hazardous voltages.

6.2 Protective class

IEC 60255-27: 2005	Class I (unless otherwise specified in the equipment documentation).
EN 60255-27: 2005	This equipment requires a protective conductor (earth) connection to ensure user safety.

6.3 Installation category

IEC 60255-27: 2005	Installation category III (Overvoltage Category III):
EN 60255-27: 2005	Distribution level, fixed installation.
	Equipment in this category is qualification tested at 5 kV peak, 1.2/50 µs, 500 Ω, 0.5 J, between all supply circuits and earth and also between independent circuits.

6.4 Environment

The equipment is intended for indoor installation and use only. If it is required for use in an outdoor environment then it must be mounted in a specific cabinet of housing which will enable it to meet the requirements of IEC 60529 with the classification of degree of protection IP54 (dust and splashing water protected).

Pollution Degree - Pollution Degree 2 Compliance is demonstrated by reference to safety Altitude - Operation up to 2000m standards.

IEC 60255-27:2005

EN 60255-27: 2005

IT

INTRODUCTION

Date:	**24th November 2009**
Hardware suffix:	**J (P241) K (P242/P243)**
Software version:	**57**
Connection diagrams:	**10P241xx (xx = 01 to 02)**
	10P242xx (xx = 01)
	10P243xx (xx = 01)

IT

CONTENTS

1	**MICOM DOCUMENTATION STRUCTURE**	**5**
2	**INTRODUCTION TO MICOM**	**7**
3	**PRODUCT SCOPE**	**8**
3.1	**Functional overview**	**8**
3.2	**Ordering options**	**12**

FIGURES

Figure 1: Functional diagram 11

TABLES

Table 1: Functional overview 10

IT

1 MICOM DOCUMENTATION STRUCTURE

The manual provides a functional and technical description of the MiCOM protection relay and a comprehensive set of instructions for the relay's use and application.

The chapter contents are summarized below:

P24x/EN IT Introduction

A guide to the MiCOM range of relays and the documentation structure. General safety aspects of handling Electronic Equipment are discussed with particular reference to relay safety symbols. Also a general functional overview of the relay and brief application summary is given.

P24x/EN TD Technical Data

Technical data including setting ranges, accuracy limits, recommended operating conditions, ratings and performance data. Compliance with norms and international standards is quoted where appropriate.

P24x/EN GS Getting Started

A guide to the different user interfaces of the protection relay describing how to start using it. This chapter provides detailed information regarding the communication interfaces of the relay, including a detailed description of how to access the settings database stored within the relay.

P24x/EN ST Settings

List of all relay settings, including ranges, step sizes and defaults, together with a brief explanation of each setting.

P24x/EN OP Operation

A comprehensive and detailed functional description of all protection and non-protection functions.

P24x/EN AP Application Notes

This chapter includes a description of common power system applications of the relay, calculation of suitable settings, some typical worked examples, and how to apply the settings to the relay.

P24x/EN PL Programmable Logic

Overview of the programmable scheme logic and a description of each logical node. This chapter includes the factory default (PSL) and an explanation of typical applications.

P24x/EN MR Measurements and Recording

Detailed description of the relays recording and measurements functions including the configuration of the event and disturbance recorder and measurement functions.

P24x/EN FD Firmware Design

Overview of the operation of the relay's hardware and software. This chapter includes information on the self-checking features and diagnostics of the relay.

P24x/EN CM Commissioning

Instructions on how to commission the relay, comprising checks on the calibration and functionality of the relay.

P24x/EN MT Maintenance

A general maintenance policy for the relay is outlined.

P24x/EN TS Troubleshooting

Advice on how to recognize failure modes and the recommended course of action. Includes guidance on whom within Schneider Electric to contact for advice.

P24x/EN SC SCADA Communications

This chapter provides an overview regarding the SCADA communication interfaces of the relay. Detailed protocol mappings, semantics, profiles and interoperability tables are not provided within this manual. Separate documents are available per protocol, available for download from our website.

P24x/EN SG Symbols and Glossary

List of common technical abbreviations found within the product documentation.

P24x/EN IN Installation

Recommendations on unpacking, handling, inspection and storage of the relay. A guide to the mechanical and electrical installation of the relay is provided, incorporating earthing recommendations. All external wiring connections to the relay are indicated.

P24x/EN VH Firmware and Service Manual Version History

History of all hardware and software releases for the product.

Px4x/EN UPCT User Programmable Curve Tool

The UPCT is stand alone document which is used in conjunction with the P24x technical manual. This document describes how to use the programmable curve tool facility available in P24x software version 57 and later.

2 INTRODUCTION TO MICOM

MiCOM is a comprehensive solution capable of meeting all electricity supply requirements. It comprises a range of components, systems and services from Schneider Electric.

Central to the MiCOM concept is flexibility.

MiCOM provides the ability to define an application solution and, through extensive communication capabilities, integrate it with your power supply control system.

The components within MiCOM are:

- P range protection relays;
- C range control products;
- M range measurement products for accurate metering and monitoring;
- S range versatile PC support and substation control packages.

MiCOM products include extensive facilities for recording information on the state and behavior of the power system using disturbance and fault records. They can also provide measurements of the system at regular intervals to a control center enabling remote monitoring and control to take place.

For up-to-date information on any MiCOM product, visit our website:

www.schneider-electric.com

3 PRODUCT SCOPE

The MiCOM P241/2/3 universal motor protection relays have been developed and designed for the protection of medium sized to large rotating machines, both synchronous and Induction. The MiCOM P243 can also offer motor differential protection, providing the neutral star point of the machine is accessible, in addition to the features of the P241/2. The P242/3 also includes 10 function keys for integral scheme or operator control functionality and tri-color (red/yellow/green) LEDs.

3.1 Functional overview

The P241/2/3 universal motor protection relays contain a wide variety of protection functions. The protection features are summarized below:

PROTECTION FUNCTIONS OVERVIEW		P24x
87	Three-phase machine differential protection is provided to detect stator phase faults. The differential protection can be selected as percentage biased or high impedance.	3
50/51	Four non-directional overcurrent protection stages are provided for protection against three-phase and phase-earth short circuit faults. Stage 1 and 2 may be set Inverse Definite Minimum Time (IDMT) or Definite Time (DT); stages 3 and 4 may be set DT only.	1/2/3
50N/51N	Two stages of earth fault protection are provided for stator earth faults. Each stage can be set to either non-directional or directional forward. Stage 1 can be set Inverse Definite Minimum Time (IDMT) or Definite Time (DT). Stage 2 can be set Definite Time (DT) only. The earth fault current can be detected using internally derived current from the 3 phases.	1/2/3
50N/51N/67N	Two stages of sensitive earth fault protection are provided. Each stage can be set to either non-directional or directional forward. Stage 1 can be set Inverse Definite Minimum Time (IDMT) or Definite Time (DT). `Stage 2 can be set to Definite Time (DT) only. The earth fault current is detected by using current measured from a sensitive current input,	1/2/3
32N/64N	The sensitive earth fault element can also be configured as a wattmetric element suitable for Petersen Coil earthed systems. This form of protection uses the same sensitive earth fault directional characteristic but with a current, voltage and residual power threshold.	1/2/3
32R	One stage of reverse power protection is provided, which measures active power to detect power flow from the motor to the system when the busbar is lost.	1/2/3
37	Two stages of under power are used to detect a loss of load due to a shaft failure or a pump running unprimed. This feature is disabled during starting	1/2/3
40	A two stage offset mho definite time impedance element is provided to detect failure of the machine excitation. A power factor alarm element is also available to offer more sensitive protection.	1/2/3
49	Thermal overload protection based on I1 and I2 is provided to protect the stator/rotor against overloading due to balanced and unbalanced currents. Both alarm and trip stages are provided.	1/2/3
46	Two negative phase sequence overcurrent elements are provided to detect a phase failure or unbalanced load. Stage 1 can be set Definite Time (DT) only and Stage 2 can be set Inverse Definite Minimum Time (IDMT) only.	1/2/3
55	Two stages (lag and Lead) of power factor protection are provided for out-of-step protection on synchronous machines. Both stages can be set to Definite Time (DT) only. Requires breaker status (52a) to operate.	1/2/3

PROTECTION FUNCTIONS OVERVIEW		P24x
59N	Residual overvoltage protection is available for stator earth fault protection where there is an isolated or high impedance earth. The residual voltage can be measured from a residual voltage input or can be calculated from the three phase to neutral voltage measurements. Two independent stages of protection are provided for each measured neutral voltage input and also for the calculated value, Stage 1 can be selected as either Inverse Definite Minimum Time (IDMT) or Definite Time (DT). Stage 2 can be selected as Definite Time (DT) only	1/2/3
27	A 2 stage undervoltage protection element, phase to phase measuring is provided. Stage 1 may be selected as either IDMT or DT and stage 2 is DT only.	1/2/3
59	A 2 stage overvoltage protection element, phase to phase measuring is provided. Both stages can be selected as DT only.	1/2/3
47	One stage of undervoltage is provided. Input voltage magnitudes are monitored (phase to neutral measuring) to ensure they are correct before allowing the machine to start. Input voltage rotation is also checked by monitoring negative phase sequence voltage > positive phase sequence voltage.	1/2/3
81U	2 stages of definite time underfrequency protection are provided to protect machines against loss of supply. This feature is disabled during starting.	1/2/3
48/51LR	A starting current detector and a starting time delay protects the motor from excessively long starts. This protection function is activated either by the 52a contact, the starting current or both the 52a contact and the starting current.	1/2/3
14	Where the motor stall withstand time may be shorter than the starting time, a digital input is provided to accommodate a speed switch to distinguish between start and stall.	1/2/3
50S	A stall during running is given by a current exceeding the programmed current threshold following a successful start.	1/2/3
66	For the number of starts limitation protection a separate count of “hot” and “cold” starts is maintained by the relay using the data held in the motor thermal replica. Starting is blocked if the permitted number of starts is exceeded by the use of a time between starts timer.	1/2/3
27 (remanent)	Used to detect when the rotor has completely stopped, in order to allow re-starting of the motor. Operation can be triggered by either a remanant voltage threshold or by a time delay.	1/2/3
RTD	10 RTDs (PT100) are provided to monitor the temperature accurately in the windings and bearings of the machine. Each RTD has an instantaneous alarm and definite time trip stage.	Option 1/2/3
50BF	A 2 stage circuit breaker failure function is provided.	1/2/3
47	Both input voltage phase rotation and magnitude are monitored to ensure they are correct before allowing the machine to start.	1/2/3
VTS	Voltage transformer supervision is provided (1, 2 & 3 phase fuse failure detection) to prevent mal-operation of voltage dependent protection elements upon loss of a VT input signal.	1/2/3
CTS	Current transformer supervision is provided to prevent mal-operation of current dependent protection elements upon loss of a CT input signal. CTS is provided for both sets of 3 phase CTs in the P243 relay.	1/2/3
CLIO	4 analog (or current loop) inputs are provided for transducers (vibration, tachometers etc.). Each input has a definite time trip and alarm stage. Each input can be independently selected as 0-1/0-10/0-20/4-20 mA. 4 analogue (or current loop) outputs are provided for the analogue measurements in the relay. Each output can be independently selected as 0-1/0-10/0-20/4-20 mA.	Option 1/2/3

IT

IT

PROTECTION FUNCTIONS OVERVIEW		P24x
	A facility is provided using an offline graphical programmable curve tool. This enables the user to configure a customized multiples of a current setting versus operating time curve and an associated reset curve. Two pairs of configurable operate-reset curves are made available to the user, one pair for thermal and one pair for overcurrent or sensitive/derived earth fault protection. The curves can be defined as a number of curve points or a user defined formula. The curves can then be downloaded to the relay and can also be extracted from the relay. The user programmable curves are available for Thermal, first and second stage overcurrent, first stage sensitive earth fault and first stage derived earth fault protection functions. To find out how to use the tool, see the *Px4x/EN UPCT/A11* document.	1/2/3
	A facility is provided to maintain correct operation of all the protection functions even when the motor is running in a reverse direction. This is achieved through user configurable settings available to two setting groups.	1/2/3
	A facility is provided to check the three phase voltages to ensure both correct phase rotation and sufficient supply voltage prior to permitting motor starting.	1/2/3
	Programmable function keys	10 (P242/3)
	Programmable LEDs (tri-color P242/3, red P241)	18 (P242/3) 8 (P241)
	Digital inputs (order option)	8 to 16
	Output relays (order option)	7 to 16
	Front communication port (EIA(RS)232)	1/2/3
	Rear communication port (KBUS/EIA(RS)485). The following communications protocols are supported; Courier, MODBUS and IEC 870-5-103 (VDEW).	1/2/3
	Rear communication port (Fiber Optic). The following communications protocols are supported; Courier, MODBUS, and IEC 870-5-103 (VDEW).	Option 1/2/3
	Second rear communication port (EIA(RS)232/EIA(RS)485). Courier protocol.	Option 1/2/3
	Rear IEC 61850 Ethernet communication port.	Option 1/2/3
	Redundant IEC 61850 Ethernet communication port.	Option 1/2/3
	Time synchronization port (IRIG-B)	Option 1/2/3

Table 1: Functional overview

The P24x supports the following relay management functions in addition to the functions illustrated above.

- Measurement of all instantaneous & integrated values
- Circuit breaker, status & condition monitoring
- Trip circuit and coil supervision (using PSL)
- 2 Alternative setting groups
- Control inputs
- Programmable Scheme Logic
- Programmable allocation of digital inputs and outputs
- Sequence of event recording
- Comprehensive disturbance recording (waveform capture)
- Fault recording
- Fully customizable menu texts

- Multi-level password protection
- Power-up diagnostics and continuous self-monitoring of relay
- Commissioning test facilities
- Real time clock/time synchronization - time synchronization possible from IRIG-B input, opto input or communications

Application overview

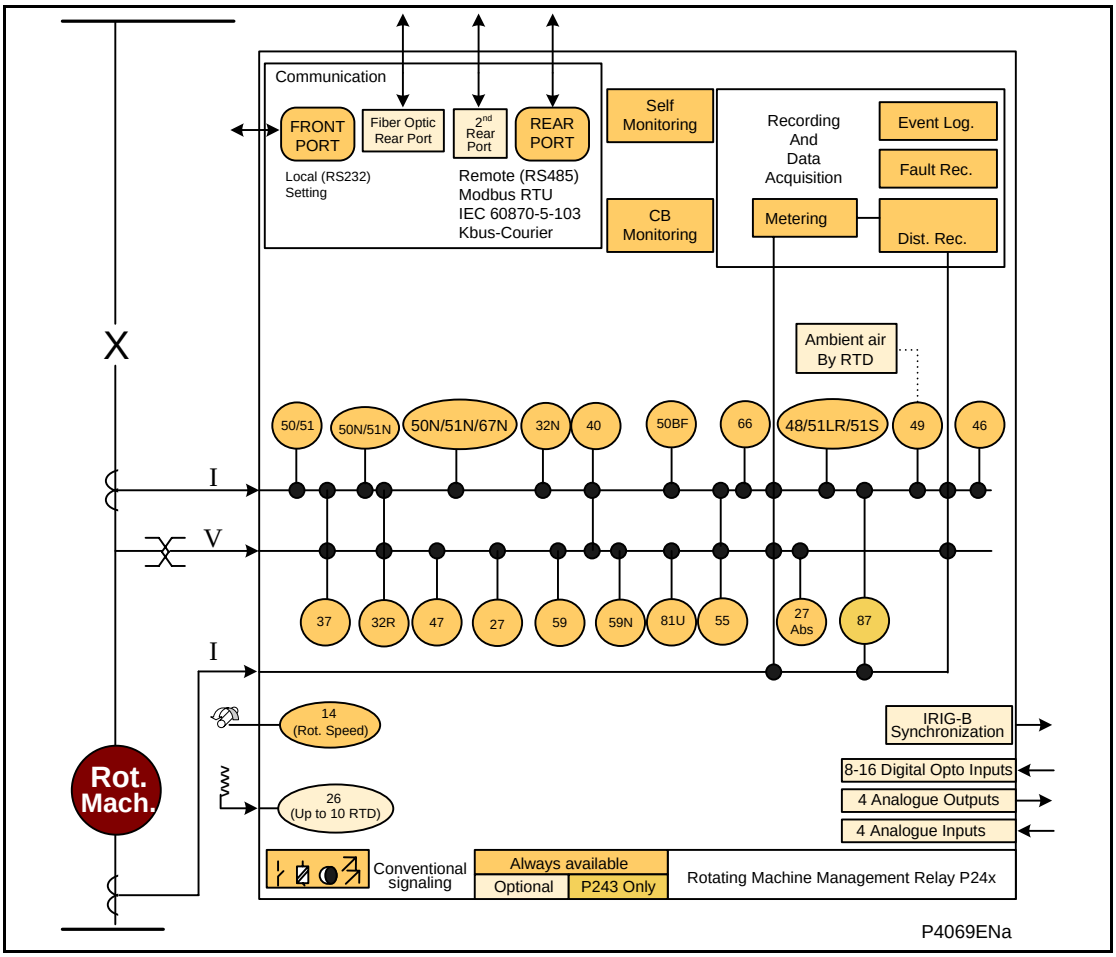

Figure 1: Functional diagram

IT

3.2 Ordering options

Information required with order

P241 Motor Protection Relay	P241										
24-48 Vdc		1									
48-110 Vdc, 40-100 Vac		2									
110-250 Vdc, 100-240 Vac		3									
In/Vn rating											
In=1 A/5 A, Vn=100/120 V			1								
Hardware options											
Nothing				1							
IRIG-B only (Modulated)				2							
Fiber Optic Rear Comms Port				3							
IRIG-B (Modulated) & Fiber Optic Rear Comms Port				4							
Ethernet (100 Mbits/s) without IRIG-B				6							
Second Rear Comms. Board*				7							
IRIG-B (Modulated) plus Second Rear Comms Board*				8							
Ethernet (100 Mbits/s) + IRIG-B (Modulated)				A							
Ethernet (100 Mbits/s) + IRIG-B (Un-modulated)				B							
IRIG-B (Un-modulated)				C							
Redundant Ethernet Self-Healing Ring, 2 multi-mode fiber ports + Modulated IRIG-B*				G							
Redundant Ethernet Self-Healing Ring, 2 multi-mode fiber ports + Un-modulated IRIG-B				H							
Redundant Ethernet RSTP, 2 multi-mode fiber ports + Modulated IRIG-B				J							
Redundant Ethernet RSTP, 2 multi-mode fiber ports + Un-modulated IRIG-B				K							
Redundant Ethernet Dual Homing Star, 2 multi-mode fiber ports + Modulated IRIG-B				L							
Redundant Ethernet Dual Homing Star, 2 multi-mode fiber ports + Un-modulated IRIG-B				M							
Product specific											
Size 40TE Case, No Option (8 Optos + 7 Relays)					A						
Size 40TE Case, 8 Optos + 7 Relays + RTD					B						
Size 40TE Case, 8 Optos + 7 Relays + CLIO					C						
Size 40TE Case, 12 Optos + 11 Relays					E						
Protocol options											
K-Bus						1					
MODBUS						2					
IEC 60870-5-103 (VDEW)						3					
IEC 61850 + Courier via rear RS485 port)						6					
Mounting											
Panel Mounting							M				
Language											
Multilingual – English, French, German, Spanish								0			
Multilingual – English, French, German, Russian								5			
Multilingual – English, French, German, Chinese								C			
Software issue											
Unless specified the latest version will be delivered									57		
Settings file											
Default										0	
Customer										1	

Design suffix	
Original	A
Universal Opto, new relays, new power supply	C
Phase 2 CPU	J

Note design suffix

A = Original hardware (48 V opto inputs only, lower contact rating)

C = Universal Optos, new relays, new power supply

J = Phase 2 CPU and front panel with 2 hotkeys and dual characteristic optos

* Not available in design suffix A and C

Note Mounting

For rack mounting assembled single rack frames and blanking plates are available.

IT

P242 Motor Protection Relay	P242										
24-48 Vdc		1									
48-110 Vdc, 40-100 Vac		2									
110-250 Vdc, 100-240 Vac		3									
In/Vn rating											
In=1 A/5 A, Vn=100/120 V			1								
Hardware options											
Nothing				1							
IRIG-B only (Modulated)				2							
Fiber Optic Rear Comms Port				3							
IRIG-B (Modulated) & Fiber Optic Rear Comms Port				4							
Ethernet (100 Mbits/s) without IRIG-B				6							
Second Rear Comms. Board*				7							
IRIG-B (Modulated) plus Second Rear Comms Board*				8							
Ethernet (100 Mbits/s) + IRIG-B (Modulated)				A							
Ethernet (100 Mbits/s) + IRIG-B (Un-modulated)				B							
IRIG-B (Un-modulated)				C							
Redundant Ethernet Self-Healing Ring, 2 multi-mode fiber ports + Modulated IRIG-B*				G							
Redundant Ethernet Self-Healing Ring, 2 multi-mode fiber ports + Un-modulated IRIG-B				H							
Redundant Ethernet RSTP, 2 multi-mode fiber ports + Modulated IRIG-B				J							
Redundant Ethernet RSTP, 2 multi-mode fiber ports + Un-modulated IRIG-B				K							
Redundant Ethernet Dual Homing Star, 2 multi-mode fiber ports + Modulated IRIG-B				L							
Redundant Ethernet Dual Homing Star, 2 multi-mode fiber ports + Un-modulated IRIG-B				M							
Product specific											
Size 40TE Case, No Option (8 Optos + 7 Relays)					A						
Size 40TE Case, 8 Optos + 7 Relays + RTD					B						
Size 40TE Case, 8 Optos + 7 Relays + CLIO					C						
Size 40TE Case, 12 Optos + 11 Relays					E						
Protocol options											
K-Bus						1					
MODBUS						2					
IEC 60870-5-103 (VDEW)						3					
IEC 61850 + Courier via rear RS485 port)						6					
Mounting											
Panel Mounting							M				
Language											
Multilingual – English, French, German, Spanish								0			
Multilingual – English, French, German, Russian								5			
Multilingual – English, French, German, Chinese								C			
Software issue											
Unless specified the latest version will be delivered									57		
Settings file											
Default										0	
Customer										1	

Design suffix	
Original	A
Universal Opto, new relays, new power supply	C
Phase 2 CPU	J

Note design suffix

C = Universal Optos, new relays, new power supply

K = Extended phase 2 CPU (phase 2 CPU and front panel with 10 function keys and tri-color LEDs and dual characteristic optos)

* Not available in design suffix C

Note Mounting

For rack mounting assembled single rack frames and blanking plates are available.

IT

P243 Motor Protection Relay	P243										
24-48 Vdc		1									
48-110 Vdc, 40-100 Vac		2									
110-250 Vdc, 100-240 Vac		3									
In/Vn rating											
In=1 A/5 A, Vn=100/120 V			1								
Hardware options											
Nothing				1							
IRIG-B only (Modulated)				2							
Fiber Optic Rear Comms Port				3							
IRIG-B (Modulated) & Fiber Optic Rear Comms Port				4							
Ethernet (100 Mbits/s) without IRIG-B				6							
Second Rear Comms. Board*				7							
IRIG-B (Modulated) plus Second Rear Comms Board*				8							
Ethernet (100 Mbits/s) + IRIG-B (Modulated)				A							
Ethernet (100 Mbits/s) + IRIG-B (Un-modulated)				B							
IRIG-B (Un-modulated)				C							
Redundant Ethernet Self-Healing Ring, 2 multi-mode fiber ports + Modulated IRIG-B*				G							
Redundant Ethernet Self-Healing Ring, 2 multi-mode fiber ports + Un-modulated IRIG-B				H							
Redundant Ethernet RSTP, 2 multi-mode fiber ports + Modulated IRIG-B				J							
Redundant Ethernet RSTP, 2 multi-mode fiber ports + Un-modulated IRIG-B				K							
Redundant Ethernet Dual Homing Star, 2 multi-mode fiber ports + Modulated IRIG-B				L							
Redundant Ethernet Dual Homing Star, 2 multi-mode fiber ports + Un-modulated IRIG-B				M							
Product specific											
Size 40TE Case, No Option (8 Optos + 7 Relays)					A						
Size 40TE Case, 8 Optos + 7 Relays + RTD					B						
Size 40TE Case, 8 Optos + 7 Relays + CLIO					C						
Size 40TE Case, 12 Optos + 11 Relays					E						
Protocol options											
K-Bus						1					
MODBUS						2					
IEC 60870-5-103 (VDEW)						3					
IEC 61850 + Courier via rear RS485 port)						6					
Mounting											
Panel Mounting							M				
Language											
Multilingual – English, French, German, Spanish								0			
Multilingual – English, French, German, Russian								5			
Multilingual – English, French, German, Chinese								C			
Software issue											
Unless specified the latest version will be delivered									57		
Settings file											
Default										0	
Customer										1	

Design suffix	
Original	A
Universal Opto, new relays, new power supply	C
Phase 2 CPU	J

Note design suffix

C = Universal Optos, new relays, new power supply

K = Extended phase 2 CPU (phase 2 CPU and front panel with 10 function keys and tri-color LEDs and dual characteristic optos)

* Not available in design suffix C

Note Mounting

For rack mounting assembled single rack frames and blanking plates are available.

IT

TD

TECHNICAL DATA

Date:	**24th November 2009**
Hardware suffix:	**J (P241) K (P242/3)**
Software version:	**57**
Connection diagrams:	**10P241xx (xx = 01 to 02)** **10P242xx (xx = 01 to 01)** **10P243xx (xx = 01 to 01)**

TD

Technical data

Mechanical specifications

Design

Modular MiCOM Px40 platform relay, P241 in 40TE case, P242 in 60TE case, P243 in 80TE case.
Mounting is front of panel flush mounting or 19“ rack mounted (ordering options).

Enclosure protection

Per IEC 60529: 1992:
IP 52 Protection (front panel) against dust and dripping water,
IP 50 Protection for rear and sides of the case, against dust,
IP 10 Protection Product safety protection for the rear due to live connections on the terminal block.

Weight

P241 (40TE): 7.3kg
P242 (60TE): 9.2kg (with RTD, CLIO cards)
P243 (80TE): 11.5kg (with RTD, CLIO cards)

Terminals

AC current and voltage measuring inputs

Located on heavy duty (black) terminal block:
Threaded M4 terminals, for ring lug connection.
CT inputs have integral safety shorting, upon removal of the terminal block.

General input/output terminals

For power supply, opto inputs, output contacts and RP1 rear communications.
Located on general purpose (grey) blocks:
Threaded M4 terminals, for ring lug connection.

Case protective earth connection

Two rear stud connections, threaded M4.
Must be earthed (grounded) for safety, minimum earth wire size 2.5 mm2.

Front port serial PC interface

EIA(RS)232 DCE, 9 pin D-type female connector Socket SK1.
Courier protocol for interface to MiCOM S1 Studio software.
Isolation to ELV (extra low voltage) level.
Maximum cable length 15 m.

Front download/monitor port

EIA(RS)232, 25 pin D-type female connector Socket SK2.
For firmware and menu text downloads.
Isolation to ELV level.

Rear communications port (RP1)

EIA(RS)485 signal levels, two wire connections located on general purpose block, M4 screw.
For screened twisted pair cable, multidrop, 1000 m max.
For K-Bus, IEC-60870-5-103 or MODBUS
Isolation to SELV (safety extra low voltage) level.

Optional rear fiber connection for SCADA/DCS

BFOC 2.5 -(ST®)-interface for glass fiber, as per IEC 874-10.
850 nm short-haul fibers, one Tx and one Rx.
For Courier, IEC-60870-5-103 or MODBUS

Optional second rear communications port (RP2)

EIA(RS)232, 9 pin D-type female connector, socket SK4.
Courier protocol: K-Bus, EIA(RS)232, or EIA(RS)485 connection.
Isolation to SELV level.

Optional rear IRIG-B interface modulated or de-modulated

BNC plug
Isolation to SELV level.
50 ohm coaxial cable.
Optional rear Ethernet connection for IEC 61850

10BaseT/100BaseTX communications

Interface in accordance with IEEE802.3 and IEC 61850
Isolation: 1.5 kV
Connector type: RJ45
Cable type: Screened Twisted Pair (STP)

100 base FX interface

Interface in accordance with IEEE802.3 and IEC 61850
Wavelength: 1300 nm
Fiber: multi-mode 50/125 µm or 62.5/125 µm
Connector style: BFOC 2.5 -(ST®)

TD

TD

Optional rear redundant Ethernet connection for IEC 61850

100 base FX interface

Interface in accordance with IEEE802.3 and IEC 61850
Wavelength: 1300 nm
Fiber: multi-mode 50/125 µm or 62.5/125 µm
Connector style: BFOC 2.5 -(ST®)
Transmitter optical characteristics 100 base FX interface

Parameter	Sym	Min	Typ	Max	Unit
Output Optical Power BOL 62.5/125 µm, NA = 0.275 Fiber EOL	PO	-19 -20	-16.8	-14	dBm avg.
Output Optical Power BOL 50/125 µm, NA = 0.20 Fiber EOL	PO	-22.5 -23.5	-20.3	-14	dBm avg.
Optical Extinction Ratio				10 -10	% dB
Output Optical Power at Logic "0" State	PO ("0")			-45	dBm avg.

BOL - Beginning of life
EOL - End of life

Receiver optical characteristics 100 base FX interface

Parameter	Sym	Min	Typ	Max	Unit
Input Optical Power Minimum at Window Edge	PIN Min. (W)		-33.5	-31	dBm avg.
Input Optical Power Minimum at Eye Center	PIN Min. (C)		-34.5	-31.8	Bm avg.
Input Optical Power Maximum	PIN Max.	-14	-11.8		dBm avg.

Fiber defect connector (watchdog relay) – redundant Ethernet board

Connector (3 terminals):	2 NC contacts
Rated voltage:	250 V
Continuous current:	5 A
Short-duration current:	30 A for 3 s
Breaking capacity:	
DC:	50 W resistive
DC:	25 W inductive (L/R = 40 ms)
AC:	1500 VA resistive (cos ϕ = unity)
AC:	1500 VA inductive (cos ϕ = 0.5)

Subject to maxima of 5 A and 250 V

Ratings

AC measuring inputs

Nominal frequency: 50 and 60 Hz (settable)
Operating range: 45 to 65 Hz

AC current

Nominal current (In): 1 and 5 A dual rated.
(1 A and 5 A inputs use different transformer tap connections, check correct terminals are wired).
Nominal burden
< 0.04 VA at In, <40 mΩ (0-30 In) In = 1 A
< 0.01 VA at In, <8 mΩ (0-30 In) In = 5 A

Thermal withstand:
continuous 4 In
for 10 s: 30 In
for 1 s; 100 In
Standard: linear to 64 In (non-offset AC current).
Sensitive: linear to 2 In (non-offset AC current).

AC voltage

Nominal voltage (Vn): 100 to 120 V phase-phase
Nominal burden per phase: < 0.02 VA rms at 110/√3 V
Thermal withstand:
continuous 2 Vn
for 10 s: 2.6 Vn
Linear to 200 V.

Power supply

Auxiliary voltage (Vx)

Three ordering options:
(i) Vx: 24 to 48 Vdc
(ii) Vx: 48 to 110 Vdc, and 40 to 100 Vac (rms)
(iii) Vx: 110 to 250 Vdc, and 100 to 240 Vac (rms)

Operating range

(i) 19 to 65 V (dc only for this variant)
(ii) 37 to 150 V (dc), 32 to 110 V (ac)
(iii) 87 to 300 V (dc), 80 to 265 V (ac).
With a tolerable ac ripple of up to 12% for a dc supply, per IEC 60255-11: 1979.

Nominal burden

Quiescent burden: 11 W or 24 VA. (Extra 1.25 W when fitted with second rear communications board).
Additions for energized binary inputs/outputs:

Per opto input:
0.09 W (24 to 54 V),
0.12 W (110/125 V),
0.19 W (220/250 V).
Per energized output relay: 0.13 W

Power-up time

Time to power up < 11 s.

Power supply interruption

Per IEC 60255-11: 1979:
The relay will withstand a 20 ms interruption in the DC auxiliary supply, without de-energizing.
Per IEC 61000-4-11: 1994:
The relay will withstand a 20 ms interruption in an AC auxiliary supply, without de-energizing.

Battery backup

Front panel mounted
Type ½ AA, 3.6 V Lithium Thionyl Chloride Battery (SAFT advanced battery reference LS14250)
Battery life (assuming relay energized for 90% time) >10 years

Field voltage output

Regulated 48 Vdc
Current limited at 112 mA maximum output
Operating range 40 to 60 V with alarm at <35 V.

Digital ("Opto") inputs

Universal opto inputs with programmable voltage thresholds (24/27, 30/34, 48/54, 110/125, 220/250 V). May be energized from the 48 V field voltage, or the external battery supply.
Rated nominal voltage: 24 to 250 Vdc
Operating range: 19 to 265 Vdc
Withstand: 300 Vdc, 300 Vrms.
Peak current of opto input when energized is 3.5 mA (0-300 V)
Nominal pick-up and reset thresholds:
Nominal battery 24/27: 60 - 80% DO/PU
(logic 0) <16.2 (logic 1) >19.2
Nominal battery 24/27: 50 - 70% DO/PU
(logic 0) <12.0 (logic 1) >16.8
Nominal battery 30/34: 60 - 80% DO/PU
(logic 0) <20.4 (logic 1) >24.0
Nominal battery 30/34: 50 - 70% DO/PU
(logic 0) <15.0 (logic 1) >21.0
Nominal battery 48/54: 60 - 80% DO/PU
(logic 0) <32.4 (logic 1) >38.4
Nominal battery 48/54: 50 - 70% DO/PU
(logic 0) <24.0 (logic 1) >33.6
Nominal battery 110/125: 60 - 80% DO/PU
(logic 0) <75.0 (logic 1) >88.0
Nominal battery 110/125: 50 - 70% DO/PU
(logic 0) <55.0 (logic 1) >77.0
Nominal battery 220/250: 60 - 80% DO/PU
(logic 0) <150.0 (logic 1) >176.0
Nominal battery 220/250: 50 - 70% DO/PU
(logic 0) <110 (logic 1) >154
Recognition time:
<2 ms with long filter removed,
<12 ms with half cycle ac immunity filter on

Output contacts

Standard contacts

General purpose relay outputs for signaling, tripping and alarming:
Continuous Carry Ratings (Not Switched):
Maximum continuous current: 10 A (UL: 8 A)
Short duration withstand carry: 30 A for 3 s
250 A for 30 ms
Rated voltage: 300 V

Make & Break Capacity:
DC: 50 W resistive
DC: 62.5 W inductive (L/R = 50 ms)
AC: 2500 VA resistive ($\cos\phi$ = unity)
AC: 2500 VA inductive ($\cos\phi$ = 0.7)
Make, Carry:
30 A for 3 secs, dc resistive, 10,000 operations (subject to the above limits of make / break capacity and rated voltage)
Make, Carry & Break:
30 A for 200 ms, ac resistive, 2,000 operations (subject to the above limits of make / break capacity & rated voltage)
4 A for 1.5 secs, dc resistive, 10,000 operations (subject to the above limits of make / break capacity & rated voltage)

0.5 A for 1 sec, dc inductive, 10,000 operations (subject to the above limits of make / break capacity & rated voltage)

10 A for 1.5 secs, ac resistive / inductive, 10,000 operations (subject to the above limits of make / break capacity & rated voltage)

Durability:
Loaded contact: 10 000 operations minimum,
Unloaded contact: 100 000 operations minimum.

Operate Time
Less than 5 ms
Reset Time
Less than 5 ms

Watchdog contacts

Non-programmable contacts for relay healthy/relay fail indication:
Breaking capacity:

TD

DC: 30 W resistive
DC: 15 W inductive (L/R = 40 ms)
AC: 375 VA inductive (cos ϕ = 0.7)

IRIG-B 12X Interface (modulated)

External clock synchronization per IRIG standard 200-98, format B12x
Input impedance 6 kΩ at 1000 Hz
Modulation ratio: 3:1 to 6:1
Input signal, peak-peak: 200 mV to 20 V

Environmental conditions

Ambient temperature range

Per IEC 60255-6: 1988:
Operating temperature range:
-25°C to +55°C (or -13°F to +131°F)
Storage and transit:
-25°C to +70°C (or -13°F to +158°F)

Per IEC 60068-2-1: 2007
-25°C storage (96 hours)
-40°C operation (96 hours)

Per IEC 60068-2-2: 2007
+85°C storage (96 hours)
+85°C operation (96 hours)

Ambient humidity range

Per IEC 60068-2-3: 1969:
56 days at 93% relative humidity and +40 °C
Per IEC 60068-2-30: 1980
Damp heat cyclic, six (12 + 12) hour cycles, 93% RH, +25 to +55°C

Corrosive environments

Per IEC 60068-2-60: 1995, Part 2, Test Ke, Method (class) 3
Industrial corrosive environment/poor environmental control, mixed gas flow test.
21 days at 75% relative humidity and +30°C
exposure to elevated concentrations of H^2S, NO^2, Cl^2 and SO^2.

Type tests

Insulation

Per IEC 60255-27: 2005:
Insulation resistance > 100 MΩ at 500 Vdc (Using only electronic/brushless insulation tester).

Creepage distances and clearances

IEC 60255-27: 2005
Pollution degree 3,
Overvoltage category III,
Impulse test voltage 5 kV.

High voltage (dielectric) withstand

(i) Per IEC 60255-27: 2005, 2 kV rms
AC, 1 minute:
Between all independent circuits.
Between independent circuits and protective (earth) conductor terminal.
1 kV rms AC for 1 minute, across open watchdog contacts.
1 kV rms AC for 1 minute, across open contacts of changeover output relays.
1 kV rms AC for 1 minute for all D-type EIA(RS)232/EIA(RS)485 ports between the communications port terminals and protective (earth) conductor terminal.
(ii) Per ANSI/IEEE C37.90-1989 (reaffirmed 1994):
1.5 kV rms AC for 1 minute, across open contacts of normally open output relays.
1 kV rms AC for 1 minute, across open watchdog contacts.
1 kV rms AC for 1 minute, across open contacts of changeover output relays.

Impulse voltage withstand test

Per IEC 60255-27: 2005:
Front time: 1.2 µs, Time to half-value: 50 µs,
Peak value: 5 kV, 0.5J
Between all independent circuits.
Between all independent circuits and protective (earth) conductor terminal.
Between the terminals of independent circuits.
EIA(RS)232 & EIA(RS)485 ports and normally open contacts of output relays excepted.

Electromagnetic compatibility (EMC)

1 MHz burst high frequency disturbance test
Per IEC 60255-22-1: 1988, Class III,
Common-mode test voltage: 2.5 kV,
Differential test voltage: 1.0 kV,
Test duration: 2 s, Source impedance: 200 Ω (EIA(RS)232 ports excepted).

100 kHz damped oscillatory test

Per EN61000-4-18: 2007: Level 3
Common mode test voltage: 2.5 kV
Differential mode test voltage: 1 kV

Immunity to electrostatic discharge

Per IEC 60255-22-2: 1996, Class 4,
15 kV discharge in air to user interface, display, communication port and exposed metalwork.
8 kV point contact discharge to any part of the front of the product.

Electrical fast transient or burst requirements

Per IEC 60255-22-4: 2002 and EN61000-4-4:2004. Test severity Class III and IV:
Amplitude: 2 kV, burst frequency 5 kHz

(Class III),
Amplitude: 4 kV, burst frequency 2.5 kHz
(Class IV).
Applied directly to auxiliary supply, and applied to all other inputs. (EIA(RS)232 ports excepted).
Amplitude: 4 kV, burst frequency 5 kHz
(Class IV) applied directly to auxiliary.

Surge withstand capability

Per IEEE/ANSI C37.90.1: 2002:
4 kV fast transient and 2.5 kV oscillatory applied directly across each output contact, optically isolated input, and power supply circuit.
4 kV fast transient and 2.5 kV oscillatory applied common mode to communications, IRIG-B.

Surge immunity test

(EIA(RS)232 ports excepted).
Per IEC 61000-4-5: 2005 Level 4,
Time to half-value: 1.2 / 50 µs,
Amplitude: 4 kV between all groups and protective (earth) conductor terminal,
Amplitude: 2 kV between terminals of each group.

Conducted/radiated immunity

For RTDs used for tripping applications the conducted and radiated immunity performance is guaranteed only when using totally shielded RTD cables (twisted leads).

Immunity to radiated electromagnetic energy

Per IEC 60255-22-3: 2000, Class III:
Test field strength, frequency band 80 to 1000 MHz:
10 V/m,
Test using AM: 1 kHz / 80%,
Spot tests at 80, 160, 450, 900 MHz
Per IEEE/ANSI C37.90.2: 2004:
80 MHz to 1000 MHz, 1 kHz 80% am and am pulsed modulated.
Field strength of 35 V/m.

Radiated immunity from digital communications

Per EN61000-4-3: 2002, Level 4:
Test field strength, frequency band 800 to 960 MHz, and 1.4 to 2.0 GHz:
30 V/m,
Test using AM: 1 kHz/80%.

Radiated immunity from digital radio telephones

Per IEC 61000-4-3: 2002:
10 V/m, 900 MHz and 1.89 GHz.

Immunity to conducted disturbances induced by radio frequency fields

Per IEC 61000-4-6: 1996, Level 3,
Disturbing test voltage: 10 V.

Power frequency magnetic field immunity

Per IEC 61000-4-8: 1994, Level 5,
100 A/m applied continuously,
1000 A/m applied for 3s.
Per IEC 61000-4-9: 1993, Level 5,
1000 A/m applied in all planes.
Per IEC 61000-4-10: 1993, Level 5,
100 A/m applied in all planes at 100 kHz/1 MHz with a burst duration of 2 s.

Conducted emissions

Per EN 55022: 1998 Class A:
0.15 - 0.5 MHz, 79 dBµV (quasi peak)
66 dBµV (average)
0.5 – 30 MHz, 73 dBµV (quasi peak)
60 dBµV (average).

Radiated emissions

Per EN 55022: 1998 Class A:
30 – 230 MHz, 40 dBµV/m at 10 m measurement distance
230 – 1 GHz, 47 dBµV/m at 10 m measurement distance.

EU directives

EMC compliance

Per 2006/95/EC:
Compliance to the European Commission Directive on EMC is claimed via the Technical Construction File route. Product Specific Standards were used to establish conformity:
EN50263: 2000

Product safety

Compliance to the European Commission Low Voltage Directive. (LVD) is demonstrated using a Technical File.
A product specific standard was used to establish conformity.
EN 60255-27: 2005

CE

R&TTE compliance

Radio and Telecommunications Terminal Equipment (R & TTE) directive 99/5/EC.
Compliance demonstrated by compliance to both the EMC directive and Low voltage directive, down to zero volts.
Applicable to rear communications ports.

TD

ATEX compliance

ATEX Potentially Explosive Atmospheres directive 94/9/EC, for equipment.
The equipment is compliant with Article 1(2) of European directive 94/9/EC.
It is approved for operation outside an ATEX hazardous area. It is however approved for connection to Increased Safety, “Ex e”, motors with rated ATEX protection, Equipment Category 2, to ensure their safe operation in gas Zones 1 and 2 hazardous areas.

CAUTION - Equipment with this marking is not itself suitable for operation within a potentially explosive atmosphere.

Compliance demonstrated by Notified Body certificates of compliance.

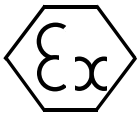

II (2) G

Note: *Programmable IDMT curves shall not be used for ATEX applications. ATEX marked models are only approved for use with a fixed IDMT curve.*

Certificate Number: 104 Issue 2
Assessment Date: 16-04-2004

Mechanical robustness

Vibration test

Per IEC 60255-21-1: 1996:
Response Class 2
Endurance Class 2

Shock and bump

Per IEC 60255-21-2: 1996:
Shock response Class 2
Shock withstand Class 1
Bump Class 1

Seismic test

Per IEC 60255-21-3: 1995:
Class 2

P24x third party compliances
Underwriters laboratory (UL)

File Number: E202519
Original Issue Date: 21-04-2005
(Complies with Canadian and US requirements).

Energy Networks Association (ENA)

Protection functions

Thermal overload

Accuracy

Setting accuracy: ±5%
Reset: 97% of thermal setting ±5%
Thermal alarm Pick-up:
Calculated trip time ±5% or 40 ms whichever is greater
Thermal overload Pick-up:
Calculated trip time ±5% or 40 ms whichever is greater
Cooling time accuracy: ±5% of theoretical
Repeatability: <2.5%

4-Stage non-directional short-circuit protection

Accuracy

Pick-up: Setting ±5%
Drop-off: 0.95 x Setting ±5%
Minimum trip level (IDMT): 1.05 x Setting ±5%
IDMT characteristic shape: ±5% or 40 ms whichever is greater*
IEEE reset: ±5% or 50 ms whichever is greater
DT operation: ±2% or 50 ms whichever is greater
DT Reset: ±5%
Characteristic UK: IEC 6025-3…1998
Characteristic US: IEEE C37.112…1996
* Under reference conditions

Sensitive directional earth fault

SEF Accuracy

Pick-up: Setting ±5%
Drop-off: 0.95 x Setting ±5%
IDMT trip level elements: 1.05 x Setting ±5%
IDMT characteristic shape: ±5% or 40 ms whichever is greater
IEEE reset: ±5% or 40 ms whichever is greater
DT operation: ±2% or 40 ms whichever is greater
DT reset: ±5%
Repeatability: <2.5%

Wattmetric SEF accuracy

P = 0W Pick-up: PO> ±5%
P > 0W Pick-up: P> ±5%
P = 0W Drop-off: (0.95 x ISEF>) ±5%
P > 0W Drop-off: 0.9 x P> ±5%
Boundary accuracy: ±5% with 1° hysteresis
Repeatability: <2.5%

Polarizing quantities accuracy

Operating boundary Pick-up: ±2° of RCA ±90°
Hysteresis: <3°
ISEF>Vnpol Pick-up: Setting ±10%
ISEF>Vnpol Drop-off: 0.9 x Setting or 0.7V (whichever is greater) ±10%

2-Stage negative phase sequence overcurrent

Accuracy

I2>Pick-up: Setting ±5%
I2> Drop-off: 0.95 x Setting ±5%
Vpol Pick-up: Setting ±5%
Vpol Drop-off: 0.95 x Setting ±5%
DT operation: ±2% or 40 ms whichever is greater
IDMT operation: ±5% or 40 ms whichever is greater

3 Phase voltage check

Accuracy

Pick-up: Setting ±5%
Drop-off: 0.95 x Setting ±5%
Repeatability (operating threshold): <1%
Repeatability (operating times): <10 ms

2-Stage directional/non-directional derived earth fault

Accuracy

Pick-up: Setting ±5%
Drop-off: 0.95 x Setting ±5%
IDMT trip level elements: 1.05 x Setting ±5%
IDMT characteristic shape: ±5% or 40 ms whichever is greater
IEEE reset: ±5% or 40 ms whichever is greater
DT operation: ±2% or 40 ms whichever is greater
DT reset: ±5%
Repeatability: 2.5%

Zero polarizing

Operating pick-up: ±2%o of RCA ±90%
Hysteresis: <3°
VN > Pick-up: Setting ±10%
VN > Drop-off: 0.9 x Setting ±10%

Negative polarizing

Operating Pick-up: ±2%o of RCA ±90%
Hysteresis: <3°
VN 2 > Pick-up: Setting ±10%
VN 2 > Drop-off: 0.9 x Setting ±10%
I2 > Pick up: Setting ±10%
I2 > Drop-off: 0.9 x Setting ±10%

TD

TD

Stall protection

Pick-up: Setting ±5%

Timer accuracy

Timers: ±2% or 40 ms whichever is greater
Reset time: <30 ms

Motor differential protection

Accuracy

Pick-up: Formula ±5%
Drop-off: 95% of setting ±5%
Operating time: <30 ms for currents applied at 4x pickup level or greater
Repeatability: <7.5%
Disengagement time: <40 ms

Neutral displacement/residual overvoltage

Accuracy

DT/IDMT Pick-up: Setting ±5%
Drop-off: 0.95 x Setting ±5%
IDMT characteristic shape: ±5% or 40 ms whichever is greater
DT operation: ±2% 40 ms whichever is greater
Instantaneous operation <55 ms
Reset: <35 ms
Repeatability: <1%

Loss of load

Accuracy

Pick-up: Setting ±5% or 2 W
Drop-off:
0.95 of setting ±5%
Angle variation Pick-up:
Expected pick-up angle ±2 degree
Angle variation Drop-off:
Expected drop-off angle ±2.5 degree
Operating time: ±2% or 40 ms whichever is greater
Repeatability: <5%
Disengagement time: <50 ms
tRESET: ±5%
Instantaneous operating time: <50 ms

Out of step

Pick-up: Setting ±5%
DT operation: ±2% or 40 ms whichever is greater

Reverse power

Accuracy

Pick-up: Setting ±5% or 2 W
Drop-off:
0.95 of setting ±5%
Angle variation Pick-up:
Expected pick-up angle ±2 degree
Angle variation Drop-off:
Expected drop-off angle ±2.5 degree
Operating time: ±2% or 40 ms whichever is greater
Repeatability: <5%
Disengagement time: <50 ms
tRESET: ±5%
Instantaneous operating time: <50 ms

Anti-backspin

Pick-up: Setting ±5%
DT operation: ±2% or 40 ms whichever is greater
Repeatability: <1%

Field failure

Accuracy

Mho characteristic Pick-up:
Characteristic shape ±5%
Linear characteristic Pick-up:
Characteristic shape ±10%
Mho characteristic Drop-off:
105% of setting ±5%
Linear characteristic Drop-off:
105% of setting ±10%
Operating time: ±2% or 60 ms whichever is greater
Repeatability: <1%
Disengagement time: <50 ms

Voltage protection

Undervoltage

Accuracy

DT Pick-up: Setting ±5%
IDMT Pick-up: (0.95 x Setting) ±5%
Drop-off: 1.05 x Setting ±5%
IDMT characteristic shape: ±5% or 40 ms whichever is greater
DT operation: ±2% or 20 ms whichever is greater
Reset: <75 ms
Repeatability: <1%

Overvoltage

Accuracy

DT Pick-up: Setting ±5%
IDMT Pick-up: Setting ±5%
Drop-off: 0.95 x Setting ±5%
IDMT characteristic shape: ±5% or 40 ms whichever is greater
DT operation: ±2% or 20 ms whichever is greater
Reset: <75 ms
Repeatability: <1%

Underfrequency

Accuracy

Pick-up: Setting ±0.01 Hz
Drop-off: (Setting +0.025 Hz) ±0.01 Hz
DT operation: ±2% or 40 ms whichever is greater*
* The operating will also include a time for the relay to frequency track 20 Hz/ second).

Resistive temperature detectors

Accuracy

Pick-up: Setting ±1°C
Drop-off: (Setting -1°C)
Operating time: ±2% or <1.1 s

CB fail

Timer accuracy

Timers: ±2% or 40 ms whichever is greater
Reset time: <30 ms

Undercurrent accuracy

Pick-up: ±10% or 25 mA whichever is greater
Operating time: < 12 ms (Typical <10 ms)
Reset: < 15 ms (Typical < 10 ms)

CB state monitoring control and condition monitoring

Accuracy

Timers: ±2% or 20 ms whichever is greater
Broken current accuracy: ±5%

Programmable scheme logic

Accuracy

Output conditioner timer: Setting ±2% or 50 ms whichever is greater
Dwell conditioner timer: Setting ±2% or 50 ms whichever is greater
Pulse conditioner timer: Setting ±2% or 50 ms whichever is greater

Measurements and recording facilities

Measurements

Accuracy

Current: 0.05…3 In: ±1% of reading
Voltage: 0.05…2 Vn: ±5% of reading
Power (W): 0.2…2 Vn, 0.05…3 In: ±5% of reading at unity power factor
Reactive Power (VArs): 0.2…2 Vn, 0.05…3 In: ±5% of reading at zero power factor
Apparent Power (VA): 0.2…2 Vn, 0.05…3 In: ±5% of reading
Energy (Wh): 0.2…2 Vn, 0.2…3 In: ±5% of reading at zero power factor
Energy (Varh): 0.2…2 Vn, 0.2…3 In: ±5% of reading at zero power factor
Phase accuracy: 0°…360: ±5%
Frequency: 45…65 Hz: ±0.025 Hz

IRIG-B and real time clock

Performance

Year 2000: Compliant
Real time accuracy: < ±1 second / day

Features

Real time 24 hour clock settable in hours, minutes and seconds
Calendar settable from January 1994 to December 2092
Clock and calendar maintained via battery after loss of auxiliary supply
Internal clock synchronization using IRIG-B
Interface for IRIG-B signal is BNC

Current loop input and outputs

Accuracy

Current loop input accuracy: ±1% of full scale
CLI drop-off threshold: 0.95 x setting ±5% of full scale
CLI sampling interval: 50 ms
CLI instantaneous operating time: < 250 ms
CLI DT operating time: ±2% setting or 200 ms whichever is the greater
CLO conversion interval: 50 ms
CLO latency: < 0.27 s depending on CLO output parameter's internal refresh rate - (0.2 s)
Current loop output accuracy: ±0.5% of full scale
Repeatability: <5%
CLI - Current Loop Input (Analog Input)
CLO - Current Loop Output (Analog Output)

TD

Other specifications

CLI load resistance 0-1 mA: < 4 kΩ
CLI load resistance 0-1 mA/0-20 mA/4 20 mA: <300 Ω
Isolation between common input channels: zero
Isolation between input channels and case earth/other circuits: 2 kV rms for 1 minute
CLO compliance voltage 0-1 mA/0 10 mA: 10 V
CLO compliance voltage 0-20 mA/4 20 mA: 8.8 V
Isolation between common output channels: zero
Isolation between output channels and case earth/other circuits: 2 kV rms for 1 minute

Disturbance records

Accuracy

Magnitude and relative phases: ±5% of applied quantities
Duration: ±2%
Trigger Position: ±2% (minimum 100ms)
Record length: 50 records each 1.5 s duration (75 s total memory) with 8 analog channels and 32 digital channels (Courier, MODBUS), 8 records each 3 s (50 Hz) or 2.5 s (60 Hz) duration (IEC 60870-5-103).

Event, fault & maintenance records

Maximum 250 events in a cyclic memory
Maximum 5 fault records
Maximum 5 maintenance records

Accuracy

Event time stamp resolution: 1 ms

Settings, measurements and records list

Settings list

Global settings (system data)

Language: English/French/German/Spanish
Frequency: 50/60 Hz

Circuit breaker control (CB control)

CB Control by:
- Disabled
- Local
- Remote
- Local + Remote
- Opto
- Opto + Local
- Opto + Remote
- Opto + Rem + Local

Close Pulse Time:	0.1…5 sec
Trip Pulse Time:	0.1…5 sec
Man Close Delay:	0.0…60 sec

Date and time

IRIG-B Sync: Disabled/Enabled
Battery Alarm: Disabled/Enabled

Configuration

Setting Group:
- Select via Menu
- Select via Optos

Active Settings:	Group 1/2
Setting Group 1:	Disabled/Enabled
Setting Group 2:	Disabled/Enabled
Thermal Overload:	Disabled/Enabled
Short Circuit:	Disabled/Enabled
Sensitive E/F:	Disabled/Enabled
Neg. Seq. O/C:	Disabled/Enabled
3PH Volt Check:	Disabled/Enabled
Derived E/F:	Disabled/Enabled
Stall Detection:	Disabled/Enabled
Differential:	Disabled/Enabled
Residual O/V NVD:	Disabled/Enabled
Limit Nb Starts:	Disabled/Enabled
Loss of Load:	Disabled/Enabled
Out of Step:	Disabled/Enabled
Reverse Power:	Disabled/Enabled
Anti-Backspin:	Disabled/Enabled
Field Failure:	Disabled/Enabled
Volt Protection:	Disabled/Enabled
Under Frequency:	Disabled/Enabled
RTD Inputs:	Disabled/Enabled
CB Fail:	Disabled/Enabled
Supervision	Disabled/Enabled
System Config:	Invisible/Visible
Input Labels:	Invisible/Visible
Output Labels:	Invisible/Visible
RTD Labels:	Invisible/Visible
CT & VT Ratios:	Invisible/Visible
Record Control:	Invisible/Visible
Disturb Recorder:	Invisible/Visible
Measure't Setup:	Invisible/Visible
Comms Settings:	Invisible/Visible
Commission Tests:	Invisible/Visible
Setting Values:	Primary/Secondary
Control Inputs:	Invisible/Visible
CLIO Inputs:	Disabled/Enabled
CLIO Outputs:	Disabled/Enabled
CLIO Labels:	Disabled/Enabled
Ctrl I/P Config:	Invisible/Visible
Ctrl I/P Labels:	Invisible/Visible
Direct Access:	Disabled/Enabled
Function Keys:	Invisible/Visible
LCD Contrast:	0…31

CT and VT ratios

Main VT Primary:	100...1000000 V
Main VT Sec'y:	80...140 V
Phase CT Primary:	1A…30 kA
Phase CT Sec'y:	1A/5 A
SEF CT Primary:	1A…30 kA
SEF CT Sec'y:	1A/5 A

VT Connecting Mode:
- 3 VT
- 2 VT + Residual

2 VT + Vremanent
(Vremanent phase-phase)

NVD VT Primary	100...1000000V
NVD VT Secondary	80...140 V

Sequence of event recorder (record control)

Alarm Event:	No/Yes
Relay O/P Event:	No/Yes
Opto Input Event:	No/Yes
General Event:	No/Yes
Fault Rec Event:	No/Yes
Maint Rec Event:	No/Yes
Protection Event:	No/Yes
DDB 31 - 0:	(up to):
DDB 1022 - 992:	

Binary function link strings, selecting which DDB signals will be stored as events, and which will be filtered out.

Oscillography (disturbance recorder)

Duration:	0.10…10.50 s
Trigger Position:	0.0…100.0%
Trigger Mode:	Single/Extended
Analog Channel 1:	(up to):
Analog Channel 8	(depending on model):

Disturbance channels selected from:
VA/VB/VC/IA/IB/IC/IA-2/IB-2/IC-2/IN/VAB/VCB/VN/VRM (*depending on model*)

Digital Input 1: (up to):
Digital Input 32:

TD

TD

Selected binary channel assignment from any DDB status point within the relay (opto input, output contact, alarms, starts, trips, controls, logic…).
Input 1 Trigger: No Trigger/Trigger Edge -/+ (Low to High)/Trigger Edge +/- (High to Low)
(up to):
Input 32 Trigger: No Trigger/Trigger Edge -/+ / Trigger Edge +/-

Measured operating data (measure't setup)

Default Display:
3Ph + N Current
3Ph Voltage
Power
Date and Time
Description
Plant Reference
Frequency
Thermal State

Local Values:	Primary/Secondary
Remote Values:	Primary/Secondary
Measurement Ref:	VA/VB/VC/IA/IB/IC
Demand Interval:	1…99 mins
Alarm Fix Demand:	Invisible/Visible
3 Phase Watt Thresh:	1 In……120 In W
3 Phase Var Thresh:	1 In……120 In VAr
Alarm Energies:	Invisible/Visible
W Fwd Thresh:	1 In……1000 In Wh
W Rev Thresh:	1 In……1000 In Wh
Var Fwd Thresh:	1 In……1000 In VArh
Var Rev Thresh:	1 In……1000 In VArh
Motor Hour Run >1:	Disable/Enable
Motor Hour Run >1:	1…9999 Hours
Motor Hour Run >2:	Disable/Enable
Motor Hour Run >2:	1…9999 Hours
Remote 2 Values:	Primary/Secondary

Communications

RP1 Protocol:
Courier
IEC60870-5-103
Modbus
RP1 Address: (Courier or IEC870-5-103):
0…255
RP1 Address: (MODBUS):
1…247

RP1 InactivTimer:	1…30 mins
RP1 Baud Rate:	(IEC 870-5-103):
9600/19200 bits/s	
RP1 Baud Rate:	(MODBUS, Courier):
9600/19200/38400 bits/s	
RP1 Parity:	Odd/Even/None (MODBUS)
RP1 Meas Period:	1…60s (IEC870-5-103)

RP1 PhysicalLink:
Copper (EIA(RS)485/K bus) or Fiber Optic

RP1 Time Sync:	Disabled/Enabled
MODBUS IEC Timer:	Standard/Reverse

RP1 CS103Blocking:
Disabled
Monitor Blocking
Command Blocking
RP1 Port Config: (Courier):
K Bus
EIA485 (RS485)
RP1 Comms Mode: (Courier):
IEC 60870 FT1.2
IEC 60870 10-Bit No parity

Note: *If RP1 Port Config is K Bus the baud rate is fixed at 64 kbits/s*

Optional Ethernet port

NIC Tunl Timeout: 1…30mins
NIC Link Report:Alarm, Event, None
NIC Link Timeout:0.1…60s

Optional additional second rear communication (rear port2 (RP2))

RP2 Protocol:
Courier
RP2 Port Config:
EIA(RS)232
EIA(RS)485
K-Bus
RP2 Comms Mode:
IEC60870 FT1.2
IEC60870 10-Bit No parity
RP2 Address: 0…255
RP2 InactivTimer: 1…30 mins
RP2 Baud Rate:
9600/19200/38400 bits/s

Note: *If RP2 Port Config is K Bus the baud rate is fixed at 64 kbits/s*

Commission tests

Monitor Bit 1:
(up to):
Monitor Bit 8:
Binary function link strings, selecting which DDB signals have their status visible in the Commissioning menu, for test purposes
Test Mode:
Disabled
Test Mode
Blocked Contacts
Test Pattern:
Configuration of which output contacts are to be energized when the contact test is applied.

Circuit breaker condition monitoring (CB monitor setup)

Broken I^:	1.0…2.0
I^ Maintenance:	Alarm Disabled/Enabled
I^ Maintenance:	1…25000
No. CB Ops Maint:	Alarm Disabled/Enabled
No. CB Ops Maint:	1…10000

CB Time Maint: Alarm Disabled/Enabled
CB Time Maint: 0.005…0.500 s

Opto coupled binary inputs (opto config)

Global Nominal V:
- 24 - 27 V
- 30 - 34 V
- 48 - 54 V
- 110 - 125 V
- 220 - 250 V

Custom
Opto Input 1:
(up to):
Opto Input #. (# = max. opto no. fitted):
Custom options allow independent thresholds to be set per opto, from the same range as above.
Opto Filter Control:
Binary function link string, selecting which optos will have an extra 1/2 cycle noise filter, and which will not.
Characteristics:
- Standard 60% - 80%
- 50% - 70%

Time stamping accuracy: ±1 msec

Control inputs into PSL (ctrl. I/P config.)

Hotkey Enabled:
Binary function link string, selecting which of the control inputs will be driven from Hotkeys.
Control Input 1: Latched/Pulsed
(up to):
Control Input 32: Latched/Pulsed
Ctrl Command 1:
(up to):
Ctrl Command 32:
- ON/OFF
- SET/RESET
- IN/OUT
- ENABLED/DISABLED

Function keys

Fn. Key Status 1:
(up to):
Fn. Key Status 10
- Disable
- Lock
- Unlock/Enable

Fn. Key 1 Mode: Toggled/Normal
(up to):
Fn. Key 10 Mode: Toggled/Normal
Fn. Key 1 Label:
(up to):
Fn. Key 10 Label:
User defined text string to describe the function of the particular function key

IED configurator

Switch Conf.Bank: No Action/Switch Banks

IEC 61850 GOOSE

GoEna: Disabled/Enabled
Test Mode: Disabled/Pass Through/Forced
VOP Test Pattern: 0x00000000...
0xFFFFFFFF
Ignore Test Flag: No/Yes

Control input user labels (ctrl. I/P labels)

Control Input 1:
(up to):
Control Input 32:
User defined text string to describe the function of the particular control input

Settings in multiple groups

Note: *All settings here onwards apply for setting groups # = 1 to 2.*

TD

TD

Protection functions

System config.

Phase Sequence: Standard ABC/Reverse ACB

Thermal

Ith Current Set:	0.2 In…1.5 In
K Coefficient:	0…10
Thermal Const T1:	1min…180min
Thermal Const T2:	1min…360min
Thermal Const Tr:	1min…999min
Thermal Trip:	Disabled/Enabled
Thermal Alarm:	Disabled/Enabled
Alarm Threshold:	0.2%…100%
Thermal Lockout:	Disabled/Enabled
Lockout Thresh:	0.2…100%
Inh Trip Dur St:	Disabled/Enabled

4-stage non-directional short circuit protection

Phase O/C: Sub Heading

I>1 Function:
- Disabled
- DT
- IEC S Inverse
- IEC V Inverse
- IEC E Inverse
- UK LT Inverse
- UK Rectifier
- RI
- IEEE M Inverse
- IEEE V Inverse
- IEEE E Inverse
- US Inverse
- US ST Inverse

I>1 Current Set:	0.2…15 In
I>1 Time Delay:	0.040…100.00 s
I>1 TMS:	0.025…1.200
I>1 Time Dial:	0.01…100.00
I>1 K (RI):	0.10…10.00
I>1 Reset Char:	DT/Inverse
I>1 tRESET:	0.00…100.00 s
I>2 as I>1	
I>3 Status:	Disabled/Enabled
I>3 Current Set:	0.20…15.00 In
I>3 Time Delay:	0.040…100.00 s
I>4 as I>3	

IDMT curves

Inverse time (IDMT) characteristic

IDMT characteristics are selectable from a choice of four IEC/UK and five IEEE/US curves as shown in the table below.

The IEC/UK IDMT curves conform to the following formula:

$$t = T \times \left(\frac{K}{(I/I_S)^{\alpha} - 1} + L \right)$$

The IEEE/US IDMT curves conform to the following formula:

$$t = TD \times \left(\frac{K}{(I/I_S)^{\alpha} - 1} + L \right)$$

Where:

t	=	Operation time
K	=	Constant
I	=	Measured current
IS	=	Current threshold setting
α	=	Constant
L	=	ANSI/IEEE constant (zero for IEC/UK curves)
T	=	Time multiplier setting for IEC/UK curves
TD	=	Time dial setting for IEEE/US curves

IDMT characteristics

IDMT curve	Stand.	K	α	L
Standard inverse	IEC	0.14	0.02	0
Very inverse	IEC	13.5	1	0
Extremely inverse	IEC	80	2	0
Long time inverse	UK	120	1	0
Moderately inverse	IEEE	0.0515	0.02	0.114
Very inverse	IEEE	19.61	2	0.491
Extremely inverse	IEEE	28.2	2	0.1217
Inverse	US-C08	5.95	2	0.18
Short time inverse	US-C02	0.16758	0.02	0.11858

The IEC extremely inverse curve becomes definite time at currents greater than 20 x setting. The IEC standard, very and long time inverse curves become definite time at currents greater than 30 x setting. The rectifier curve becomes definite time at currents greater than 8xsttings.

The definite time part of the IEC inverse time characteristics at currents greater than 20x and 30x setting are only relevant for currents in the operating range of the relay. The operating range of the P241/2/3 current inputs is 0 – 64 In for the standard current inputs and is 0 – 2 In for the sensitive current input.

The RI curve (electromechanical) has been included in the first and second stage characteristic setting options for Phase Overcurrent and Earth Fault protections. The curve is represented by the following equation:

$$t = K \times \left(\frac{1}{0.339 - \left(0.236 / M \right)} \right) \text{ in seconds}$$

With K adjustable from 0.1 to 10 in steps of 0.05

M = I/Is

For all IEC/UK curves, the reset characteristic is definite time only.

For all IEEE/US curves, the reset characteristic can be selected as either inverse curve or definite time.

The inverse reset characteristics are dependent upon the selected IEEE/US IDMT curve as shown in the table below.

All inverse reset curves conform to the following formula:

$$tRESET = \frac{TD \times S}{(1 - M^2)} \text{ in seconds}$$

Where:

TD = Time dial setting for IEEE curves
S = Constant
M = I/Is

Curve description	Standard	S
Moderately inverse	IEEE	4.85
Very inverse	IEEE	21.6
Extremely inverse	IEEE	29.1
Inverse	US	5.95
Short time inverse	US	2.261

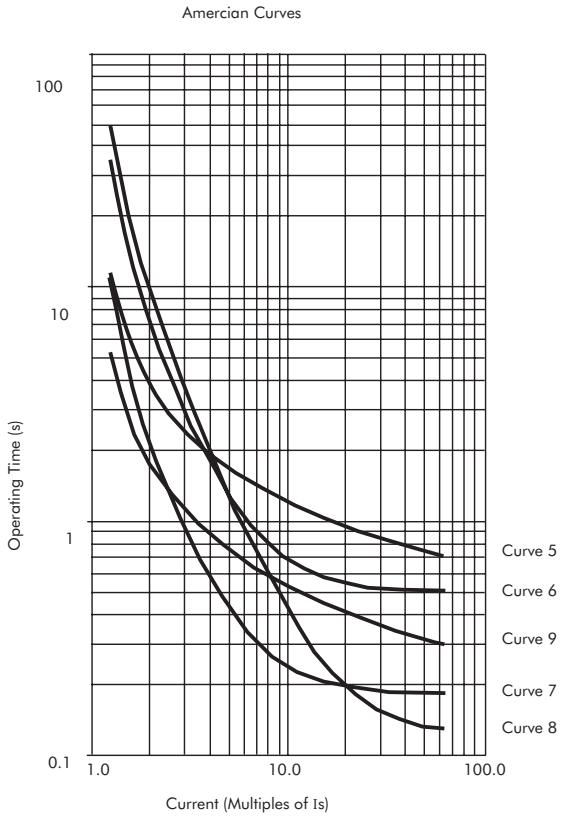

Curve 5 IEEE moderately inverse
Curve 6 IEEE very inverse
Curve 7 IEEE extremely inverse
Curve 8 US inverse
Curve 9 US short time inverse

P2137ENa

IEC Curves

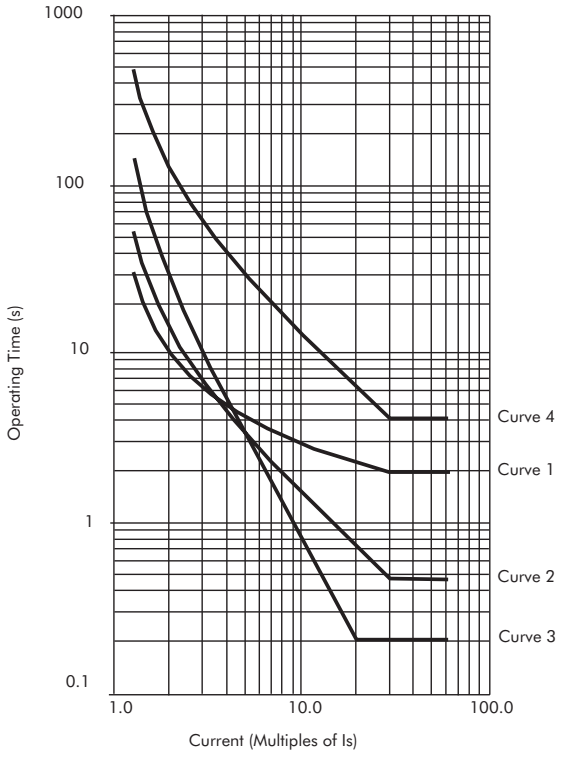

Curve 1 Standard inverse
Curve 2 Very inverse
Curve 3 Extremely inverse
Curve 4 UK long time inverse

P2136ENa

TD

Earth fault

ISEF>1 Function:
- Disabled
- DT
- IEC S Inverse
- IEC V Inverse
- IEC E Inverse
- UK LT Inverse
- UK Rectifier
- IEEE M Inverse
- IEEE V Inverse
- IEEE E Inverse
- US Inverse
- US ST Inverse

ISEF>1 Direction:
- Non-Directional
- Directional Fwd

ISEF>1 Current:	0.005 In…1 In
ISEF>1 T Delay:	0.04…200.0 s
ISEF>1 TMS:	0.025…1.2
ISEF>1 Time Dial:	0.5…15
ISEF>1 Reset Chr:	DT/Inverse
ISEF>1 tReset:	0…100 s
ISEF>2 Function:	Disabled/Enabled

ISEF>2 Direction:
- Non-Directional
- Directional Fwd

ISEF>2 Current Set:	0.005In…1In
ISEF>2 T Delay:	0.04…200 s
ISEF> Char Angle:	-180°…+180°
ISEF> VN Pol Set:	0.5…25 V

(Earth Fault Wattmetric)

PO> Function:	Disabled/Enabled
PO> Current Set:	0.005 In…1 In
PO> Voltage Set:	0.5…80 V
PO> Coeff K Set:	1…10
PO> Char Angle:	-180°…+180°
PO> Time Delay:	0.04…100 s

Negative sequence overcurrent

I2>1 Status:	Disabled/DT
I2>1 Current Set:	0.05…0.8 In
I2>1 Time Delay:	0.04…200 s
I2>2 Status:	Disabled/IMDT
I2>2 Current Set:	0.05…0.8 In
I2>2 TMS:	0.07…2

3 phase voltage check

Start Low V Set:	0.1 Vn…1.0 Vn

Earth fault derived

IN>1 Function:
- Disabled
- DT
- IEC S Inverse
- IEC V Inverse
- IEC E Inverse
- UK LT Inverse
- UK Rectifier
- IEEE M Inverse
- IEEE V Inverse
- IEEE E Inverse
- US Inverse
- US ST Inverse

IN>1 Direction:
- Non-Directional
- Directional Fwd

IN>1 Current Set:	0.08In…32 In
IN>1 T Delay:	0.04…100 s
IN>1 TMS:	0.025…1.2
IN>1 Time Dial:	0.5…15
IN>1 Reset Chr:	DT/Inverse
IN>1 tReset:	0…100 s
IN>2 Function:	Disabled/DT

IN>2 Direction:
- Non-Directional
- Directional Fwd

IN>2 Current:	0.08 In…32 In
IN>2 T Delay:	0.04…100 s
IN> Char Angle:	-180°…+180°

IN> Type Pol Type:
- Zero Sequence
- Neg Sequence

IN> VN Pol Set:	0.5…25 V
IN> V2pol Set:	0.5…25 V
IN2> I2pol Set:	0.002 In…0.8 In

Stall detection

Prolonged Start:
- Disabled/Enabled

Start Criteria:
- 52 a
- I
- 52 a + I

Starting Current:	1*Ith…5*Ith

Prol Start time:
- 1…200 s

Stall Rotor Strt:
- Disabled/Enabled

Stall Detection:
- Disabled/Enabled

Stall Setting:	1*Ith…5*Ith
Stall Time:	0.1…60 s

Reacceleration:
- Disabled/Enabled

Reacc Low Voltage Setting:
- 50…120 V

Motor differential protection

Diff Function:
- Disabled
- Percentage Bias
- High Impedance

Diff Is1:	0.05…0.50 In
Diff k1:	0…20%
Diff Is2:	1…5.0 In
Diff k2:	20…150.00%

Residual O/V NVD

VN>1 Function:
- Disabled
- DT
- IDMT

VN>1 Voltage Set: 0.5….80 V
VN>1 Time Delay: 0.04…100 s
VN>1 TMS: 0.05…100
VN>2 Status: Disabled/DT
VN>2 Voltage Set: 0.5…80 V
VN>2 Time Delay: 0.04…100 s

Limit Nb starts

Hot Start status:
Disabled/Enabled
Hot start Nb: 1…5
Cold Start Stat:
Disabled/Enabled
Cold start Nb: 1…5
Supervising Time: 10…120 min
T Betw St Status:
Disabled/Enabled
Time betw start: 1…120 min
Inhib Start Ttime: 1…120 min

Loss of load

P<1 Status: Disabled/DT
P<1 Power Set: 1*In …120*In W
P<1 Time Delay: 0.04…100s
P<2 Status: Disabled/DT
P<2 Power Set: 1*In …120*In W
P<2 Time Delay: 0.04…100 s
P< Drop-off Time 0.05…300 s

Out of step (power factor)

PF< Status Lead: Disabled/DT
Power Fact lead: 0.1…0.9
PF< Lead TD: 0.05…100 s
PF< Status Llag: Disabled/DT
Power Fact Lag: 0.1…0.9
PF< Lag TD: 0.05…100 s
PF< Drop-off time: 0.05…300 s

Reverse power

Rev P< Power Set: 1*In…120*In W
Rev P< Time Delay: 0.04…100 s
Rev P< Drop-of Ti: 0.05…300 s

Anti-backspin

VRem Anti-backs: 1…120 V
Anti-backs Delay: 1…7200 s

Field failure

FFail Alm Status: Disabled/Enabled
FFail Alm Angle: 15°…75°
FFail Alm Delay: 0.00…100.0 s
FFail 1 Status: Disabled/Enabled
FFail 1 -Xa1: 0…40.0/InΩ
FFail 1 Xb1: 25…325.0/InΩ
FFail 1 Time Delay: 0…100 s
FFail 1 DO Timer: 0…100 s
FFail 2 as FFail1

Volt protection

Undervoltage

V<1 Function:
Disabled
DT
IDMT
V<1 Voltage Set: 15…120 V
V<1 Time Delay: 0.04…7200 s
V<1 TMS: 0.5…100
V<2 Status: Disabled/DT
V<2 Voltage Set: 15…120VV<2 Time Delay: 0.04…100 s
Inhib During St: Disabled/DT

Overvoltage

V>1 Status: Disabled/DT
V>1 Voltage Set: 50…200 V
V>1 time Delay: 0.04…7200 s
V>2 Status: Disabled/DT
V>2 Voltage Set: 50…200 V
V>2 Time Delay: 0.04…7200 s

Underfrequency

F<1 Status: Disabled/DT
F<1 Setting: 45…65 Hz
F<1 Time Delay: 0.1…100 s
F<2 Status: Disabled/DT
F<2 Setting: 45…65 Hz
F<2 Time Delay: 0.1…100 s

RTD protection

Select RTD:
Bit 0 - Select RTD 1
Bit 1 - Select RTD 2
Bit 2 - Select RTD 3
Bit 3 - Select RTD 4
Bit 4 - Select RTD 5
Bit 5 - Select RTD 6
Bit 6 - Select RTD 7
Bit 7 - Select RTD 8
Bit 8 - Select RTD 9
Bit 9 - Select RTD 10
Binary function link string, selecting which RTDs (1 - 10) are enabled.
RTD 1 Alarm Set: 0°C…200°C
RTD 1 Alarm Dly: 0s…100s
RTD 1 Trip Set: 0°C…200°C
RTD 1 Trip Dly: 0s…100s
RTD2/3/4/5/6/7/8/9/10 as RTD1
Ext. Temp. Influence: Disabled/DT
Ext. Temp. RTD: 1…10
Ext. RTD Back-up: 1…10
Type RTD:
PT100
Ni100
Ni120
RTD Unit:
Degree Celsius
Fahrenheit

CB fail

CB Fail 1 Status: Disabled/Enabled
CB Fail 1 Timer: 0.00…10.00 s
CB Fail 2 Status: Disabled/Enabled
CB Fail 2 Timer: 0.00…10.00 s

TD

CBF Non I Reset: I< Only, CB Open & I<, Prot Reset & I<
CBF Ext Reset: I< Only, CB Open & I <, Prot Reset & I<
I< Current Set: 0.02…3.200 In

Supervisory functions

Voltage transformer supervision (fuse failure)

Accuracy

Fast block operation: <25 ms
Fast block reset: <30 ms
Time delay: Setting ±2% or 20 ms whichever is greater

Current transformer supervision

Accuracy

IN > Pick-up: Setting ±5%
VN < Pick-up: Setting ±5%
IN > Drop-off: 0.9 x Setting ±5%
VN < Drop-off: (1.05 x Setting) ±5% or 1 V whichever is greater
CTS block operation: < 1 cycle
CTS reset: < 35 ms

Input labels

Opto Input 1…16: Opto 1…Opto 16

User defined text string to describe the function of the particular opto input.

Output labels

Relay 1…16: Relay 1…Relay 16

User defined text string to describe the function of the particular relay output contact.

RTD labels

RTD 1-10: RTD1…RTD10

User defined text string to describe the function of the particular RTD.

CLIO labels

CLIO Input 1…16:
Analog Input 1…Analog Input 16

User defined text string to describe the function of the particular analog input.

Analogue Input (current loop input)

CLIO Inputs
Range 1:
Disabled
0 - 1 mA
0 - 10 mA
0 - 20 mA
4 - 20 mA

Unit 1:	Unit Range
None	-32.5 k...50 k
A	0...100 k
V	0...20 k
Hz	0...100
W	-1.41 G...1.41 G
Var	-1.41 G...1.41 G
VA	0...1.41 G
°C	-40...400
F	-40...752
%	0...150
s	0...300

Minimum 1: As above for unit range
Maximum 1: As above for unit range
Function 1: Disabled/Enabled
Alarm Set 1: As above for unit range
Alarm Delay 1: 0…300 s
Trip Set 1: As above for unit range
Trip Delay 1: 0…300 s
Drop-off Time: 0.1…300
CLI2/3/4 as CLI1

Analogue output (current loop output)

CLIO Outputs
Range 1:
0 - 1 mA
0 - 10 mA
0 - 20 mA
4 - 20 mA
ANALOG OUTPUT 1: As shown below*
Minimum 1: Range, step size and unit corresponds to the selected parameter
Maximum 1: Same as Minimum 1
ANALOG OUTPUT2/3/4 as ANALOG OUTPUT1
ANALOG Output Parameters
Current Magnitude:
IA Magnitude
IB Magnitude
IC Magnitude
IN Measured Mag
0.00…100 kA
Phase Currents:
IA RMS
IB RMS
IC RMS
In RMS
0.00…100 kA
P-N Voltage Magnitude:
VAN Magnitude
VBN Magnitude
VCN Magnitude
0.0…20 kV
RMS Phase P-N Voltages:
VAN RMS
VBN RMS
VCN RMS
0.0…20 kV
P-P Voltage Magnitude:
VAB Magnitude

VBC Magnitude
VCA Magnitude
0.0…20 kV
RMS Phase P-P Voltages:
VAB RMS
VBC RMS
VCA RMS
0.0…20 kV
Frequency: 0.00…100.0 Hz
3 Phase Watts: -10 MW…10 MW
3 Phase Vars: -10 MVar…10 MVar
3 Phase VA: -10 MVA…10 MVA
3Ph Power Factor: -1…1
RTD 1-10: -40°C…400.0°C
Number of Hottest RTD: 1..10
Thermal State: 0-150
Time to Thermal Trip: 0…300 s
Time to Next Start: 0…300 s

Plant supervision

CB state monitoring control and condition monitoring

Accuracy

Timers: ±2% or 20 ms whichever is greater
Broken current accuracy: ±5%

Programmable scheme logic

Accuracy

Output conditioner timer: Setting ±2% or 50 ms whichever is greater
Dwell conditioner timer: Setting ±2% or 50 ms whichever is greater
Pulse conditioner timer: Setting ±2% or 50 ms whichever is greater

IEC 61850 Ethernet data

100 Base FX Interface

Transmitter optical characteristics

(TA = 0°C to 70°C, VCC = 4.75 V to 5.25 V)

Parameter	Sym	Min.	Typ.	Max.	Unit
Output Optical Power BOL 62.5/125 µm, NA = 0.275 Fiber EOL	PO	-19 -20	-16.8	-14	dBm avg.
Output Optical Power BOL 50/125 µm, NA = 0.20 Fiber EOL	PO	-22.5 -23.5	-20.3	-14	dBm avg.
Optical Extinction Ratio				10 -10	% dB
Output Optical Power at Logic "0" State	PO ("0")			-45	dBm avg.

BOL - Beginning of life
EOL - End of life
Receiver optical characteristics
(TA = 0°C to 70°C, VCC = 4.75 V to 5.25 V)

Parameter	Sym	Min.	Typ.	Max.	Unit
Input Optical Power Minimum at Window Edge	PIN Min. (W)		-33.5	–31	dBm avg.
Input Optical Power Minimum at Eye Center	PIN Min. (C)		-34.5	-31.8	Bm avg.
Input Optical Power Maximum	PIN Max.	-14	-11.8		dBm avg.

Note: *The 10BaseFL connection will no longer be supported as IEC 61850 does not specify this interface*

Measurements list

Measurements 1

Iφ Magnitude
Iφ Phase Angle
Per phase (φ = A, B, C) current measurements
IN Derived Mag
IN Derived Angle
ISEF Magnitude
ISEF Angle
I1 magnitude
I2 magnitude
I0 Magnitude
Iφ RMS
Per phase (φ = A, B, C) RMS current measurements
Vφ-φ Magnitude
Vφ-φ Phase Angle
Vφ Magnitude
Vφ Phase Angle
All phase-phase and phase-neutral voltages (φ = A, B, C, N).
Vr Antibacks Mag
V1 Magnitude
V2 Magnitude
Vφ RMS
Vφ-φ RMS
All phase-phase and phase-neutral voltages (φ = A, B, C, AB, BC, CA).
Frequency
Ratio I2/I1
IA2 Magnitude
IA2 Angle
IB2 Magnitude
IB2 Angle

TD

IC2 Magnitude
IC2 Angle
IA Differential
IB Differential
IC Differential
IA Bias
IB Bias
IC Bias

Measurements 2

3 Phase Watts
3 Phase VArs
3 Phase VA
Zero Seq Power
3Ph Power Factor
3Ph WHours Fwd
3Ph WHours Rev
3Ph VArHours Fwd
3Ph VArHours Rev
Reset Energies: No/Yes
3Ph W Fix Demand
3Ph VArs Fix Dem
3Ph W Peak Dem
3Ph VAr Peak Dem
Reset Demand: No/Yes
3Ph I Maximum
3Ph V Maximum
Reset Maximum I/V: No/Yes

Measurements 3 (model specific)

Thermal Load
Thermal State
Time to Th Trip
Reset Th State: No/Yes
RTD#1 Temperature…….
……...to RTD#10 Temperature
Nb of Hot St Allow
Nb of Cold St Allow
Time to Next St
Emergency Rest: No/Yes
Last Start Time
Last St Current
Nb of Starts
Reset Nb of St: No/Yes
Nb Emergency Rst
Reset Nb Em Rst: No/Yes
Nb of Reaccelerat
Reset Nb of Reacc: No/Yes
Motor Run Time
Reset Motor Run T: No/Yes
RTD open Cct
RTD Short Cct
RTD Data Error
Reset RTD Flags: No/Yes
Nb Hottest RTD
Hottest RTD Temp
Reset Max RTD Temp: No/Yes
Analog Input 1
Analog Input 2
Analog Input 3
Analog Input 4

Measurements 4 (model specific)

Nb Control trips
Nb Thermal Trip
Nb Trip I> 1
Nb Trip I> 2
Nb Trip I> 3
Nb Trip I> 4
Nb Trip ISEF>1
Nb Trip ISEF>2
Nb Trip IN>1
Nb Trip IN>2
Nb Trip I2>1
Nb Trip I2> 2
Nb Trip P0>
Nb Trip V<1
Nb Trip V<2
Nb Trip F<1
Nb Trip F<2
Nb F.Fail1 Trip
Nb F.Fail2 Trip
Nb Trip P<1
Nb Trip P<2
Nb Trip PF< Lead
Nb Trip PF< Lag
Nb Trip Rev P
Nb Trip V> 1
Nb Trip V> 2
Nb Trip VN>1
Nb Trip VN>2
Nb Prolong St
Nb Lock Rot-sta
Nb Lock-Rot-run
Nb Trip RTD#1…Nb Trip RTD#10
Nb Trip Diff
Nb A Input 1Trip
Nb A Input 2Trip
Nb A Input 3Trip
Nb A Input 4Trip
Nb FFail1 Trip
Nb FFail2 Trip
Nb Trip I>3
Nb Trip I>4
Reset Trip Stat: No/Yes

CB condition

CB Operations
Total Iφ Broken
Cumulative breaker interruption duty on a per phase basis (φ = A, B, C).
CB Operate Time
Reset CB Data: No/Yes

GS

GETTING STARTED

Date:	**24th November 2009**
Hardware suffix:	**J (P241) K (P242/3)**
Software version:	**57**
Connection diagrams:	**10P241xx (xx = 01 to 02)**
	10P242xx (xx = 01)
	10P243xx (xx = 01)

GS

CONTENTS

1	**GETTING STARTED**	**5**
1.1	**User interfaces and menu structure**	**5**
1.2	**Introduction to the relay**	**5**
1.2.1	Front panel	5
1.2.1.1	LED indications	7
1.2.2	Relay rear panel	8
1.3	**Relay connection and power-up**	**9**
1.4	**Introduction to the user interfaces and settings options**	**10**
1.5	**Menu structure**	**10**
1.5.1	Protection settings	11
1.5.2	Disturbance recorder settings	11
1.5.3	Control and support settings	11
1.6	**Password protection**	**12**
1.7	**Relay configuration**	**13**
1.8	**Front panel user interface (keypad and LCD)**	**13**
1.8.1	Default display and menu time-out	14
1.8.2	Menu navigation and setting browsing	14
1.8.3	Hotkey menu navigation	14
1.8.3.1	Setting group selection	14
1.8.3.2	Control inputs – user assignable functions	15
1.8.3.3	CB control	15
1.8.4	Password entry	15
1.8.5	Reading and clearing of alarm messages and fault records	16
1.8.6	Setting changes	16
1.9	**Front communication port user interface**	**17**
1.9.1	Front courier port	18
1.10	**MiCOM S1 Studio relay communications basics**	**19**
1.10.1	PC requirements	19
1.10.2	Connecting to the relay using MiCOM S1 Studio	19
1.10.3	Off-line use of MiCOM S1 Studio	20
1.11	**The User Programmable Curve Tool (UPCT)**	**20**
1.11.1	Supporting software versions	20
1.11.2	Application advantages of user-programmable curves	20
1.11.3	The main features and overview of the User Configurable Curve Tool:	20

FIGURES

Figure 1: Relay front view (P241) 5
Figure 2: Relay front view (P242/3) 6
Figure 3: Relay rear view 9
Figure 4: Menu structure 11
Figure 5: Front panel user interface 13
Figure 6: Hotkey menu navigation 15
Figure 7: Front port connection 17
Figure 8: PC - relay signal connection 18

GS

TABLES

Table 1: P241 default mappings for programmable LEDs 7
Table 2: P242/3 default mappings for programmable LEDs 8
Table 3: Auxiliary voltage options 9
Table 4: Information and controls accessed from available interfaces 10
Table 5: Access levels 12
Table 6: Front port pin designation 17
Table 7: DTE devices serial port pin designation 17
Table 8: Front port fixed communication settings 18

1 GETTING STARTED

1.1 User interfaces and menu structure

The settings and functions of the MiCOM protection relay can be accessed both from the front panel keypad and LCD, and via the front and rear communication ports. Information on each of these methods is given in this section to describe how to start using the relay.

1.2 Introduction to the relay

1.2.1 Front panel

The front panel of the relay is shown in Figure 1, with the hinged covers at the top and bottom of the relay shown open. Extra physical protection for the front panel can be provided by an optional transparent front cover. With the cover in place read only access to the user interface is possible. Removal of the cover does not compromise the environmental withstand capability of the product, but allows access to the relay settings. When full access to the relay keypad is required, for editing the settings, the transparent cover can be unclipped and removed when the top and bottom covers are open. If the lower cover is secured with a wire seal, this will need to be removed. Using the side flanges of the transparent cover, pull the bottom edge away from the relay front panel until it is clear of the seal tab. The cover can then be moved vertically down to release the two fixing lugs from their recesses in the front panel.

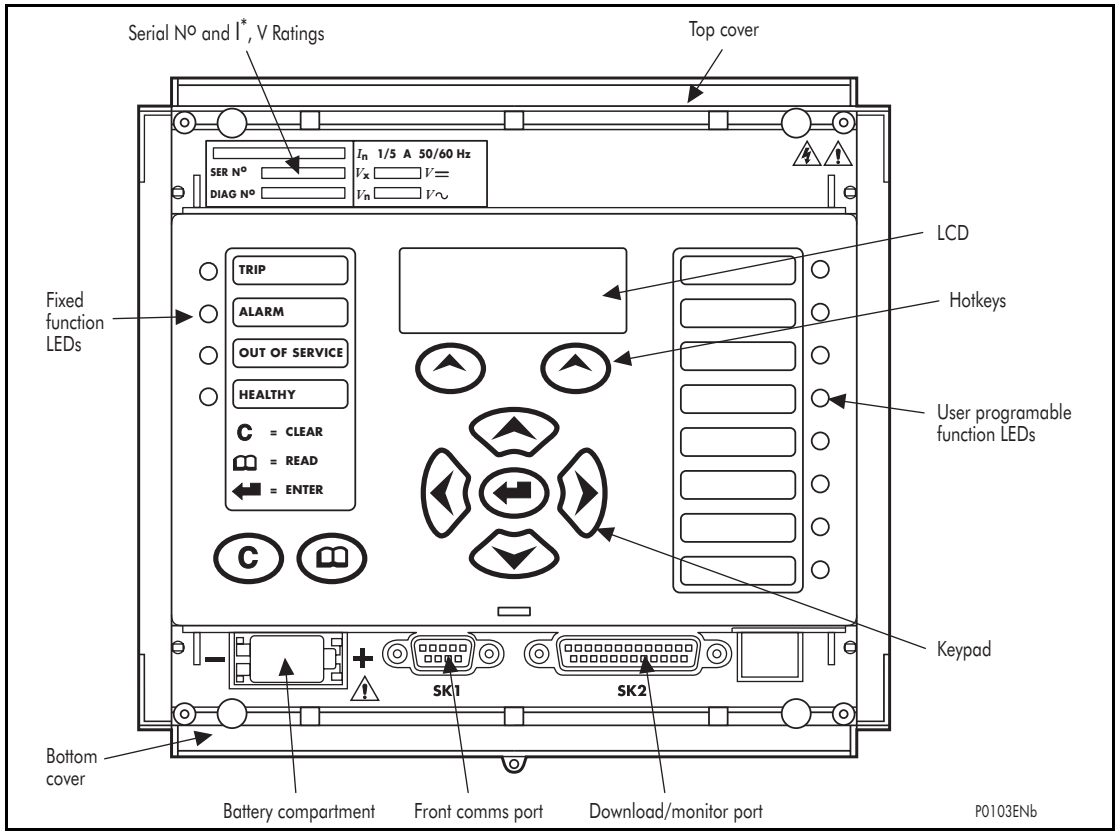

Figure 1: Relay front view (P241)

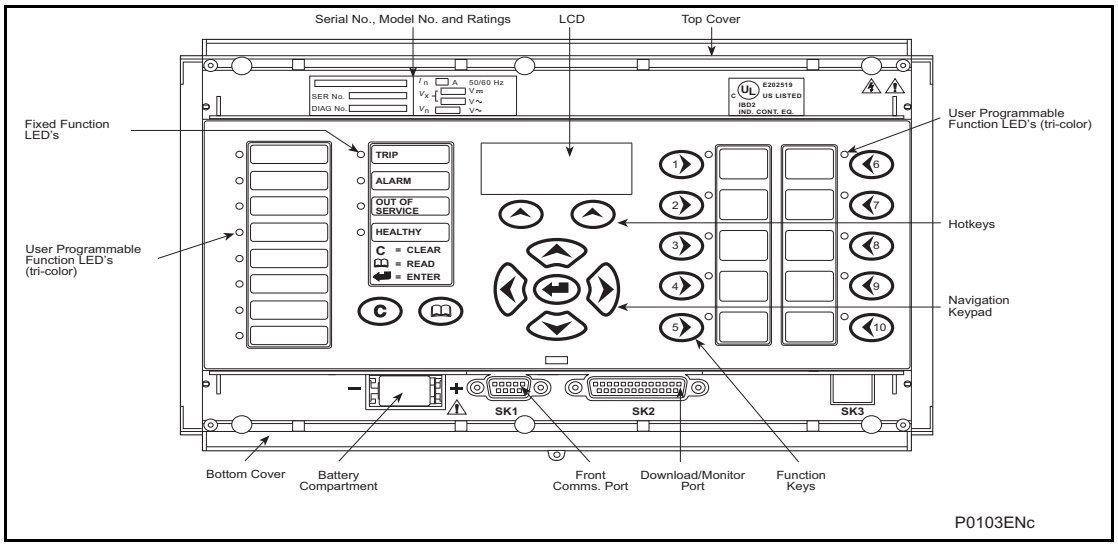

Figure 2: Relay front view (P242/3)

The front panel of the relay includes the following, as indicated in Figure 1 and Figure 2.

- A 16-character by 3-line alphanumeric liquid crystal display (LCD)
- A 19-key (P242/3), 9 key (P241) keypad comprising 4 arrow keys, and , an enter key (), a clear key (), a read key (), 2 hot keys () and 10 () programmable function keys (P242/3)
- Function key functionality (P242/3 only):
  - The relay front panel features control pushbutton switches with programmable LEDs that facilitate local control. Factory default settings associate specific relay functions with these 10 direct-action pushbuttons and LEDs e.g. Enable/Disable the auto-recloser function. Using programmable scheme logic, the user can readily change the default direct-action pushbutton functions and LED indications to fit specific control and operational needs.
- Hotkey functionality:
  - SCROLL
  - Starts scrolling through the various default displays.
  - STOP
  - Stops scrolling the default display.
  - For control of setting groups, control inputs and circuit breaker operation
- 22 LEDs (P242/3), 12 LEDs (P241); 4 fixed function LEDs, 8 tri-color (P242/3), 8 red (P241) programmable function LEDs on the left hand side of the front panel and 10 tri-color programmable function LEDs on the right hand side associated with the function keys (P242/3)
- Under the top hinged cover:
  - The relay serial number, and the relay's current and voltage rating information
- Under the bottom hinged cover:
  - Battery compartment to hold the 1/2 AA size battery which is used for memory back-up for the real time clock, event, fault and disturbance records
  - A 9-pin female D-type front port for communication with a PC locally to the relay (up to 15 m distance) via an EIA(RS)232 serial data connection
  - A 25-pin female D-type port providing internal signal monitoring and high speed local downloading of software and language text via a parallel data connection

GS

1.2.1.1 LED indications

Fixed Function

The 4 fixed function LEDs on the left-hand side of the front panel are used to indicate the following conditions:

Trip (Red) indicates that the relay has issued a trip signal. It is reset when the associated fault record is cleared from the front display.

Alarm (Yellow) flashes to indicate that the relay has registered an alarm. This may be triggered by a fault, event or maintenance record. The LED will flash until the alarms have been accepted (read), after which the LED will change to constant illumination, and will extinguish, when the alarms have been cleared.

Out of service (Yellow) indicates that the relay's protection is unavailable.

Healthy (Green) indicates that the relay is in correct working order, and should be on at all times. It will be extinguished if the relay's self-test facilities indicate that there is an error with the relay's hardware or software. The state of the healthy LED is reflected by the watchdog contact at the back of the relay.

To improve the visibility of the settings via the front panel, the LCD contrast can be adjusted using the **LCD Contrast** setting in the CONFIGURATION column. This should only be necessary in very hot or cold ambient temperatures.

Programmable LEDs

All the programmable LEDs are tri-color in the P242/3 and can be programmed to indicate RED, YELLOW or GREEN depending on the requirements. All the programmable LEDs are RED in the P241. The 8 programmable LEDs are suitable for programming alarm indications and the default indications and functions are indicated in the table below. The 10 programmable LEDs physically associated with the function keys (P242/3), are used to indicate the status of the associated pushbutton's function and the default indications are shown below:

The default mappings for each of the programmable LEDs are as shown in the following table for the P241 which have red LEDs:

LED number	LED input connection/text	Latched	P241 LED function indication
1	LED 1 Red	No	Opto Input 1 (CB Closed, 52a)
2	LED 2 Red	No	Opto Input 2 (CB Open, 52b)
3	LED 3 Red	No	Opto Input 3 (Speed Switch)
4	LED 4 Red	No	Start in Progress
5	LED 5 Red	No	Re-acceleration in Progress
6	LED 6 Red	No	Start Successful
7	LED 7 Red	No	Re-acceleration Low Voltage Detected
8	LED 8 Red	No	Start Protection (Number of hot/cold starts, time between starts), Thermal Trip, 3Ph Volt Alarm

Table 1: P241 default mappings for programmable LEDs

The default mappings for each of the programmable LEDs are as shown in the following table for the P242/3 which has tri-color LEDS (red/yellow/green):

LED number	LED input connection/text	Latched	P242/3 LED function indication
1	LED 1 Green	No	Opto Input 1 (CB Closed, 52a)
1	LED 1 Red	No	Opto Input 2 (CB Open, 52b)
2	LED 2 Not Used		
3	LED 3 Yellow	No	Opto Input 3 (Speed Switch)

LED number	LED input connection/text	Latched	P242/3 LED function indication
4	LED 4 Yellow	No	Start in Progress
5	LED 5 Yellow	No	Re-acceleration in Progress
6	LED 6 Green	No	Start Successful
7	LED 7 Yellow	No	Re-acceleration Low Voltage Detected
8	LED 8 Red	No	Start Protection (Number of hot/cold starts, time between starts), Thermal Trip, 3Ph Volt Alarm
9	FnKey LED1 (Yellow)	N/A	Emergency Restart
10	FnKey LED2 (Yellow)	N/A	Trip
11	FnKey LED3 (Yellow)	N/A	Close
12	FnKey LED4	N/A	Not Used
13	FnKey LED5 (Red)	N/A	Setting Group
14	FnKey LED6	N/A	Not Used
15	FnKey LED7	N/A	Not Used
16	FnKey LED8 (Yellow)	N/A	Reset Thermal
17	FnKey LED9 (Yellow)	N/A	Reset Latches
18	FnKey LED10 (Yellow)	N/A	Disturbance Recorder Trigger

Table 2: P242/3 default mappings for programmable LEDs

1.2.2 Relay rear panel

The rear panel of the relay is shown in Figure 3. All current and voltage signals, digital logic input signals and output contacts are connected at the rear of the relay. Also connected at the rear is the twisted pair wiring for the rear EIA(RS)485 communication port, the IRIG-B time synchronizing input and the optical fiber rear communication port which are both optional.

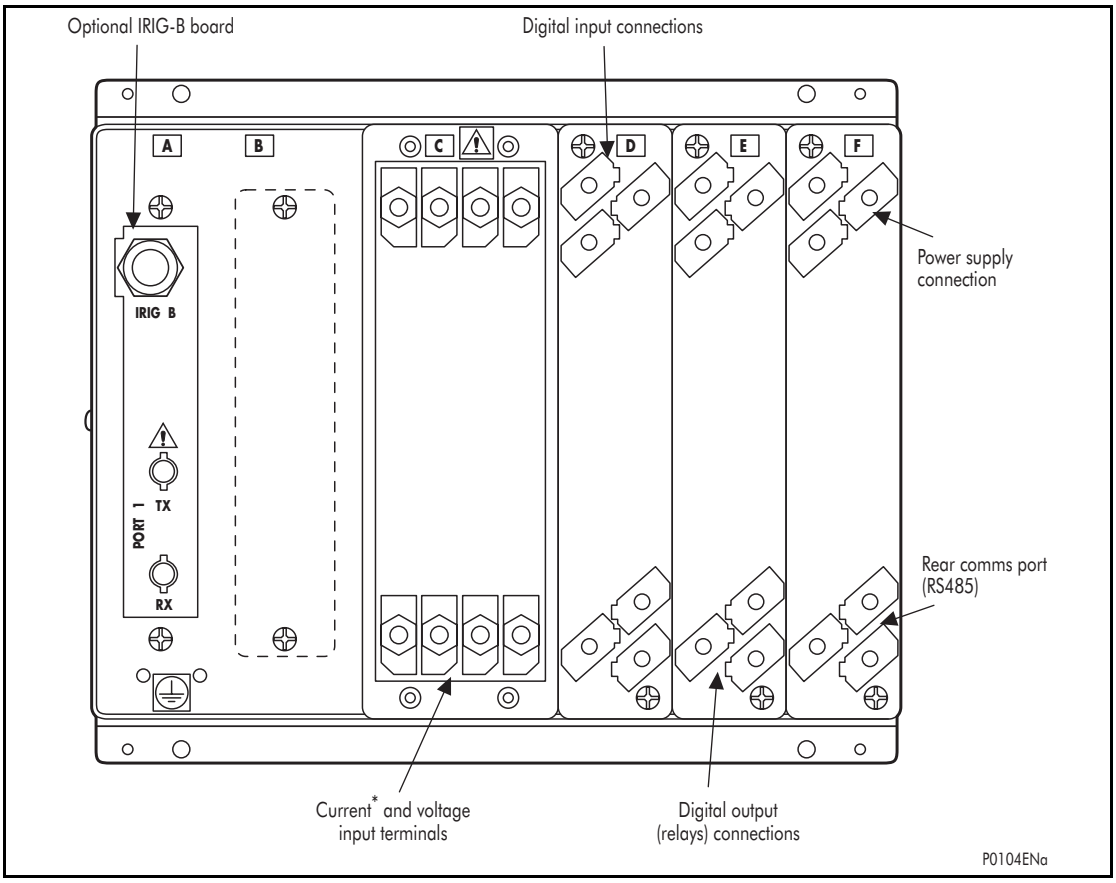

Figure 3: Relay rear view

Refer to the wiring diagrams in the Installation chapter (*P24x/EN IN*) for complete connection details.

1.3 Relay connection and power-up

Before powering-up the relay, confirm that the relay power supply voltage and nominal ac signal magnitudes are appropriate for your application. The relay serial number, and the relay's current and voltage rating, power rating information can be viewed under the top hinged cover. The relay is available in the following auxiliary voltage versions and these are specified in the Table 3:

Nominal ranges	Operative dc range	Operative ac range
24 - 48 V dc	19 to 65 V	-
48 - 110 V dc (40 - 100 V ac rms) **	37 to 150 V	32 to 110 V
110 - 250 V dc (100 - 240 V ac rms) **	87 to 300 V	80 to 265 V

Table 3: Auxiliary voltage options

** rated for ac or dc operation

Note: The label does not specify the logic input ratings.

The P24x relay is fitted with universal opto isolated logic inputs that can be programmed for the nominal battery voltage of the circuit of which they are a part. See **Universal Opto** input in the Firmware chapter for more information on logic input specifications.

Note: The opto inputs have a maximum input voltage rating of 300 V dc at any setting.

Once the ratings have been verified for the application, connect external power capable of delivering the power requirements specified on the label to perform the relay familiarization procedures. Figure 3 indicates the location of the power supply terminals but please refer to the wiring diagrams in the Installation chapter for complete installation details ensuring that the correct polarities are observed in the case of dc supply.

GS

1.4 Introduction to the user interfaces and settings options

The relay has three user interfaces:

- The front panel user interface via the LCD and keypad
- The front port which supports Courier communication
- The rear port which supports one protocol of either Courier, MODBUS or IEC 60870-5-103. The protocol for the rear port must be specified when the relay is ordered
- Second rear port (option) which supports Courier communication

The measurement information and relay settings that can be accessed from the four interfaces are summarized in Table 4.

	Keypad/LCD	Courier	MODBUS	IEC 870-5-103
Display & modification of all settings	•	•	•	
Digital I/O signal status	•	•	•	•
Display/extraction of measurements	•	•	•	•
Display/extraction of fault records	•	•	•	•
Extraction of disturbance records		•	•	•
Programmable scheme logic settings		•		
Reset of fault & alarm records	•	•	•	•
Clear event & fault records	•	•	•	
Time synchronization		•	•	•
Control commands	•	•	•	•

Table 4: Information and controls accessed from available interfaces

1.5 Menu structure

The relay's menu is arranged in a tabular structure. Each setting in the menu is referred to as a cell, and each cell in the menu may be accessed by reference to a row and column address. The settings are arranged so that each column contains related settings, for example all of the disturbance recorder settings are contained within the same column. As shown in Figure 4, the top row of each column contains the heading that describes the settings contained within that column. Movement between the columns of the menu can only be made at the column heading level. A complete list of all of the menu settings is given in the Relay Menu Database (*P24x/EN MD*).

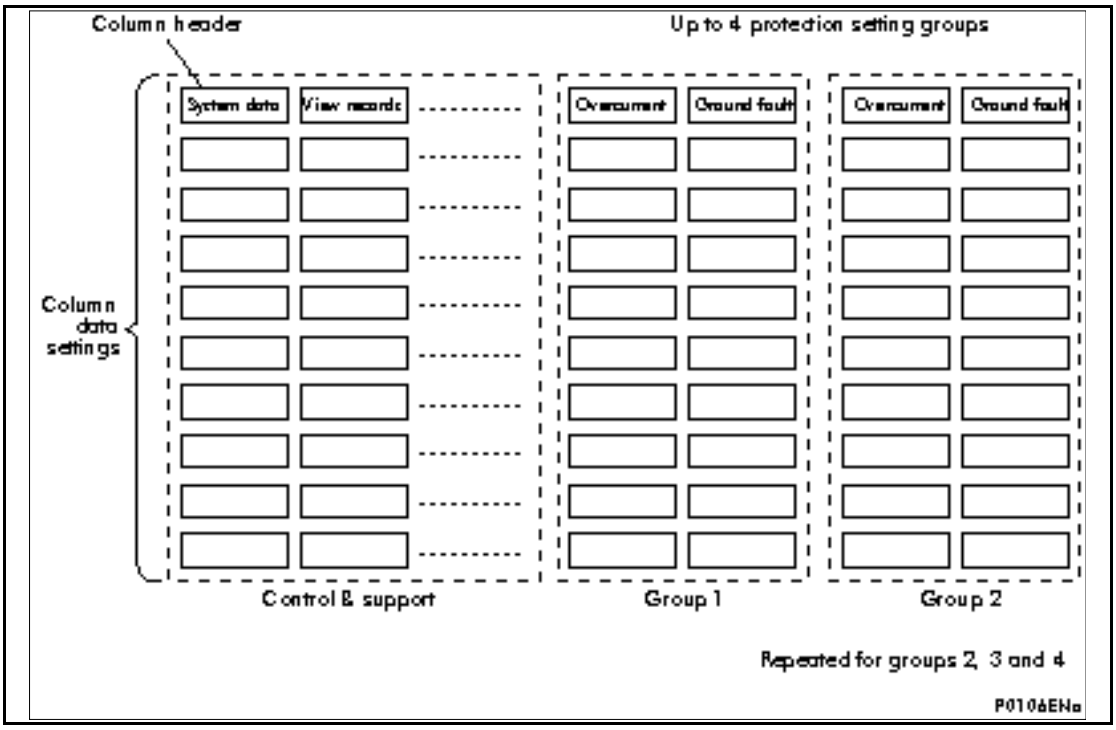

Figure 4: Menu structure

All of the settings in the menu fall into one of three categories; protection settings, disturbance recorder settings, or control and support (C&S) settings. One of two different methods is used to change a setting depending on which category the setting falls into. Control and support settings are stored and used by the relay immediately after they are entered. For either protection settings or disturbance recorder settings, the relay stores the new setting values in a temporary 'scratchpad'. It activates all the new settings together, but only after it has been confirmed that the new settings are to be adopted. This technique is employed to provide extra security, and so that several setting changes that are made within a group of protection settings will all take effect at the same time.

1.5.1 Protection settings

The protection settings include the following items:

- Protection element settings
- Scheme logic settings

There are two groups of protection settings, with each group containing the same setting cells. One group of protection settings is selected as the active group, and is used by the protection elements.

1.5.2 Disturbance recorder settings

The disturbance recorder settings include the record duration and trigger position, selection of analog and digital signals to record, and the signal sources that trigger the recording.

1.5.3 Control and support settings

The control and support settings include:

- Relay configuration settings
- Open/close circuit breaker (may vary according to relay type/model)
- CT & VT ratio settings
- Reset LEDs
- Active protection setting group
- Password & language settings
- Circuit breaker control & monitoring settings (may vary according to relay type/model)
- Communications settings

- Measurement settings
- Event & fault record settings
- User interface settings
- Commissioning settings

1.6 Password protection

The menu structure contains three levels of access. The level of access that is enabled determines which of the relay's settings can be changed and is controlled by entry of two different passwords. The levels of access are summarized in Table 5.

Set the "Password Control" cell to	The "Access Level" cell displays	Operations	Type of password required
0	0	**Read** Access to all settings, alarms, event records and fault records	None
		Execute Control Commands, e.g. circuit breaker open/close. Reset of fault and alarm conditions. Reset LEDs. Clearing of event and fault records	Level 1 Password
		Edit All other settings	Level 2 Password
1	1	**Read** Access to all settings, alarms, event records and fault records	None
		Execute Control Commands, e.g. circuit breaker open/close. Reset of fault and alarm conditions. Reset LEDs. Clearing of event and fault records	None
		Edit All other settings	Level 2 Password
2 (Default)	2 (Default)	**Read** Access to all settings, alarms, event records and fault records	None
		Execute Control Commands, e.g. circuit breaker open/close. Reset of fault and alarm conditions. Reset LEDs. Clearing of event and fault records	None
		Edit All other settings	None

Table 5: Access levels

Each of the two passwords are 4 characters of upper case text. The factory default for both passwords is AAAA. Each password is user-changeable once it has been correctly entered. Entry of the password is achieved either by a prompt when a setting change is attempted, or by moving to the **Password** cell in the **System data** column of the menu. The level of access is independently enabled for each interface, that is to say if level 2 access is enabled for the rear communication port, the front panel access will remain at level 0 unless the relevant password is entered at the front panel. The access level enabled by the password entry will time-out independently for each interface after a period of inactivity and revert to the default level. If the passwords are lost an emergency password can be supplied - contact Schneider Electric with the relay's serial number. The current level of access enabled for an interface can be determined by examining the **Access level** cell in the **System data** column, the access level for the front panel User Interface (UI), can also be found as one of the default display options.

The relay is supplied with a default access level of 2, such that no password is required to change any of the relay settings. It is also possible to set the default menu access level to either level 0 or level 1, preventing write access to the relay settings without the correct password. The default menu access level is set in the **Password control** cell which is found in the **System data** column of the menu

Note: This setting can only be changed when level 2 access is enabled.

1.7 Relay configuration

The relay is a multi-function device that supports numerous different protection, control and communication features. In order to simplify the setting of the relay, there is a configuration settings column which can be used to enable or disable many of the functions of the relay. The settings associated with any function that is disabled are made invisible, i.e. they are not shown in the menu. To disable a function change the relevant cell in the **Configuration** column from **Enabled** to **Disabled**.

The configuration column controls which of the four protection settings groups is selected as active through the **Active settings** cell. A protection setting group can also be disabled in the configuration column, provided it is not the present active group. Similarly, a disabled setting group cannot be set as the active group.

1.8 Front panel user interface (keypad and LCD)

When the keypad is exposed it provides full access to the menu options of the relay, with the information displayed on the LCD.

The ⟲, ⟨, ⟩ and ⟳ keys which are used for menu navigation and setting value changes include an auto-repeat function that comes into operation if any of these keys are held continually pressed. This can be used to speed up both setting value changes and menu navigation; the longer the key is held depressed, the faster the rate of change or movement becomes.

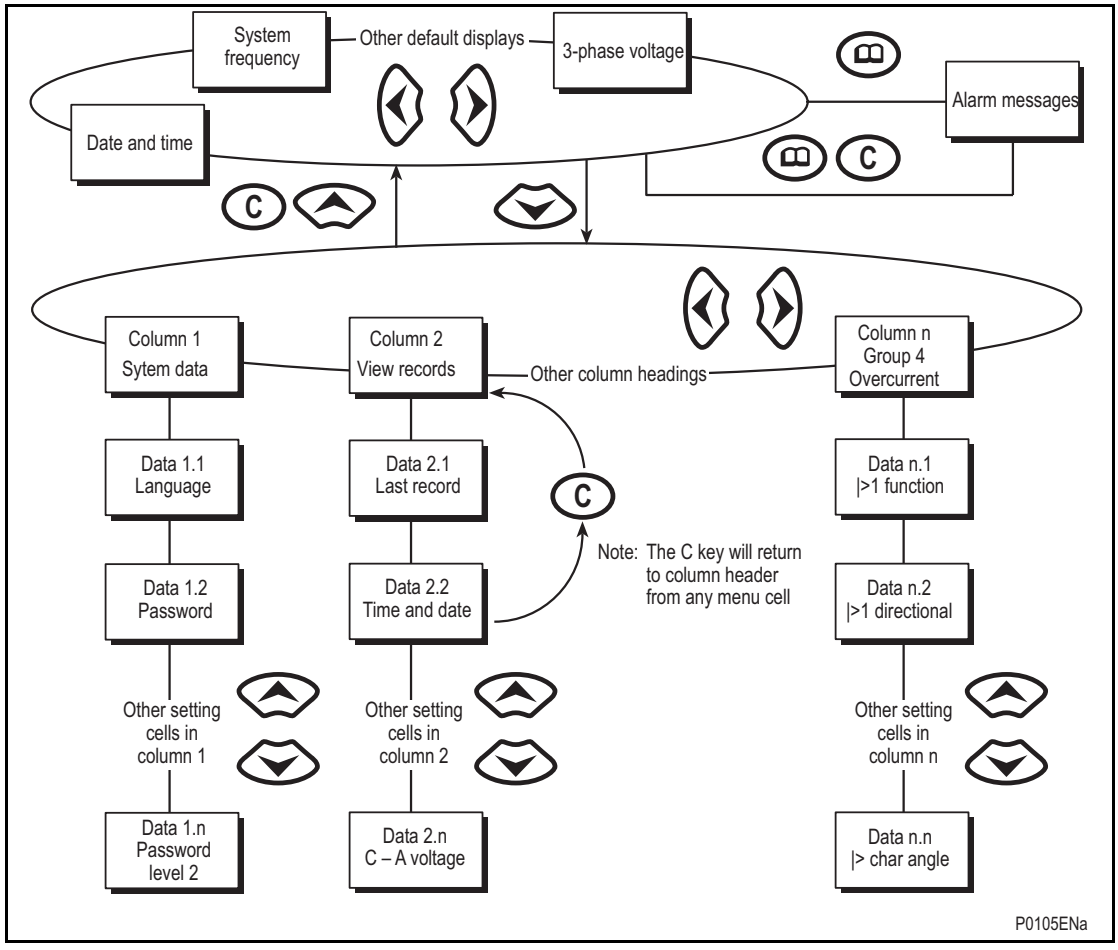

Figure 5: Front panel user interface

GS

1.8.1 Default display and menu time-out

The front panel menu has a default display, the contents of which can be selected from the following options in the **default display** cell of the **Measure't. setup** column:

- Date and time
- Relay description (user defined)
- Plant reference (user defined)
- System frequency
- 3 phase voltage
- 3 phase and neutral current
- Power
- Thermal State

From the default display it is also possible to view the other default display options using the ⟨ and ⟩ keys. However, if there is no keypad activity for the 15 minute timeout period, the default display will revert to that selected by the setting and the LCD backlight will turn off. If this happens any setting changes that have not been confirmed will be lost and the original setting values maintained.

Whenever there is an uncleared alarm present in the relay (e.g. fault record, protection alarm, control alarm etc.) the default display will be replaced by:

Alarms/Faults Present

Entry to the menu structure of the relay is made from the default display and is not affected if the display is showing the 'Alarms/Faults present' message.

1.8.2 Menu navigation and setting browsing

The menu can be browsed using the four arrow keys, following the structure shown in 0. Therefore, starting at the default display the ⇳ key will display the first column heading. To select the required column heading use the ⟨ and ⟩ keys. The setting data contained in the column can then be viewed by using the ⇵ and ⇳ keys. It is possible to return to the column header either by holding the [up arrow symbol] key down or by a single press of the clear key ⓒ. It is only possible to move across columns at the column heading level. To return to the default display press the ⇳ key or the clear key ~ from any of the column headings. It is not possible to go straight to the default display from within one of the column cells using the auto-repeat facility of the ⇳ key, as the auto-repeat will stop at the column heading. To move to the default display, the ⇳ key must be released and pressed again.

1.8.3 Hotkey menu navigation

The hotkey menu can be browsed using the two keys directly below the LCD. These are known as direct access keys. The direct access keys perform the function that is displayed directly above them on the LCD. Therefore, to access the hotkey menu from the default display the direct access key below the "HOTKEY" text must be pressed. Once in the hotkey menu the ⇐ and ⇒ keys can be used to scroll between the available options and the direct access keys can be used to control the function currently displayed. If neither the ⇐ or ⇒ keys are pressed with 20 seconds of entering a hotkey sub menu, the relay will revert to the default display. The clear key ⓒ will also act to return to the default menu from any page of the hotkey menu. The layout of a typical page of the hotkey menu is described below:

- The top line shows the contents of the previous and next cells for easy menu navigation
- The center line shows the function
- The bottom line shows the options assigned to the direct access keys
- The functions available in the hotkey menu are listed below:

1.8.3.1 Setting group selection

The user can either scroll using <<NXT GRP>> through the available setting groups or <<SELECT>> the setting group that is currently displayed.

When the SELECT button is pressed a screen confirming the current setting group is displayed for 2 seconds before the user is prompted with the <<NXT GRP>> or <<SELECT>> options again. The user can exit the sub menu by using the left and right arrow keys.

For more information on setting group selection refer to *Changing setting group* section in the Operation chapter (*P24x/EN OP*).

1.8.3.2 Control inputs – user assignable functions

The number of control inputs (user assignable functions - USR ASS) represented in the hotkey menu is user configurable in the "CTRL I/P CONFIG" column. The chosen inputs can be SET/RESET using the hotkey menu.

For more information refer to the *Control Inputs* section in the Operation chapter (*P24x/EN OP*).

1.8.3.3 CB control

The CB control functionality varies from one Px40 relay to another (e.g. CB control via the hotkey menu is not included in the P241/2/3).

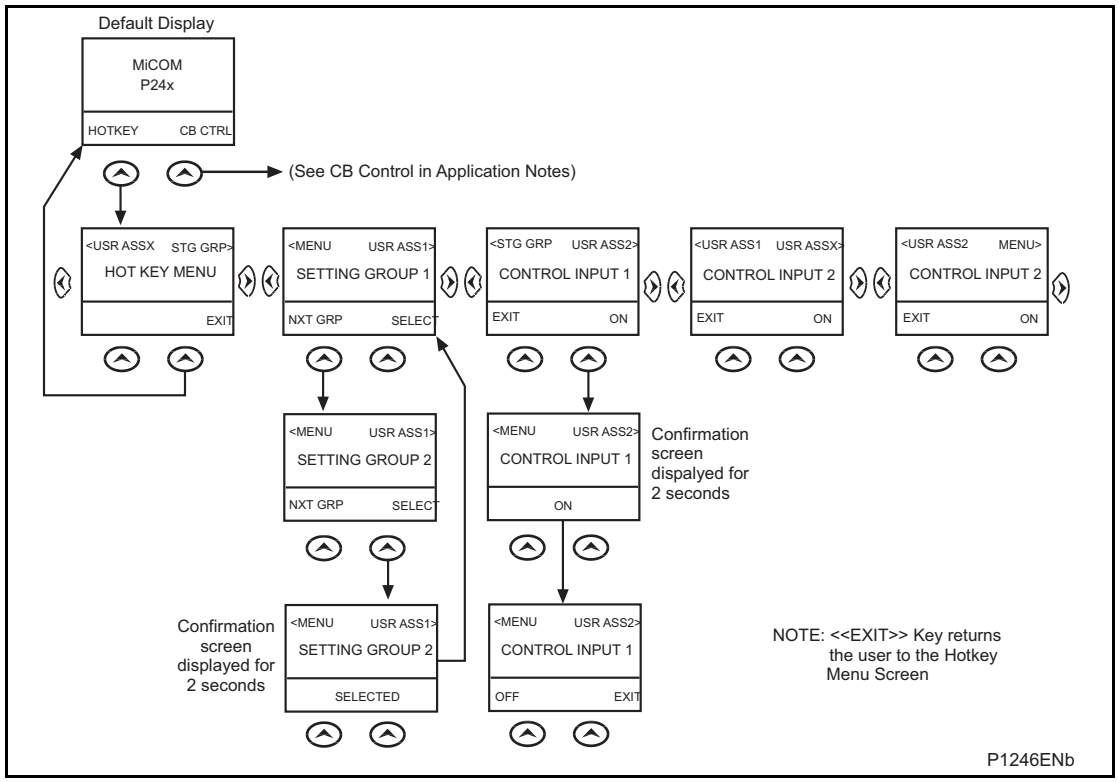

Figure 6: Hotkey menu navigation

1.8.4 Password entry

When entry of a password is required the following prompt will appear:

```
Enter password
**** Level 1
```

Note: The password required to edit the setting is the prompt as shown above.

A flashing cursor will indicate which character field of the password may be changed. Press the ⌃ and ⌄ keys to vary each character between A and Z. To move between the character fields of the password, use the ‹ and › keys. The password is confirmed by pressing the enter key ↵The display will revert to 'Enter Password' if an incorrect password is entered. At this point a message will be displayed indicating whether a correct password has been entered and if so what level of access has been unlocked. If this level is sufficient to edit the selected setting then the display will return to the setting page to allow the edit to continue. If the correct level of password has not been entered then the password prompt page will be returned to. To escape from this prompt press the clear key C. Alternatively, the password can be entered using the 'Password' cell of the 'System data' column.

For the front panel user interface the password protected access will revert to the default access level after a keypad inactivity time-out of 15 minutes. It is possible to manually reset the password protection to the default level by moving to the **Password** menu cell in the **System data** column and pressing the clear key C instead of entering a password.

GS

1.8.5 Reading and clearing of alarm messages and fault records

The presence of one or more alarm messages will be indicated by the default display and by the yellow alarm LED flashing. The alarm messages can either be self-resetting or latched, in which case they must be cleared manually. To view the alarm messages press the read key 📖. When all alarms have been viewed, but not cleared, the alarm LED will change from flashing to constant illumination and the latest fault record will be displayed (if there is one). To scroll through the pages of this use the 📖 key. When all pages of the fault record have been viewed, the following prompt will appear:

Press clear to reset alarms

To clear all alarm messages press C; to return to the alarms/faults present display and leave the alarms uncleared, press 📖. Depending on the password configuration settings, it may be necessary to enter a password before the alarm messages can be cleared (see section on password entry). When the alarms have been cleared the yellow alarm LED will extinguish, as will the red trip LED if it was illuminated following a trip.

Alternatively it is possible to accelerate the procedure, once the alarm viewer has been entered using the 📖 key, the C key can be pressed, and this will move the display straight to the fault record. Pressing C again will move straight to the alarm reset prompt where pressing ↵ once more will clear all alarms.

1.8.6 Setting changes

To change the value of a setting, first navigate the menu to display the relevant cell. To change the cell value press the enter key ↵ which will bring up a flashing cursor on the LCD to indicate that the value can be changed. This will only happen if the appropriate password has been entered, otherwise the prompt to enter a password will appear. The setting value can then be changed by pressing the ⌄ or ⌃ keys. If the setting to be changed is a binary value or a text string, the required bit or character to be changed must first be selected using the ‹ and › keys. When the desired new value has been reached it is confirmed as the new setting value by pressing ↵. Alternatively, the new value will be discarded either if the clear button C is pressed or if the menu time-out occurs.

For protection group settings and disturbance recorder settings, the changes must be confirmed before they are used by the relay. To do this, when all required changes have been entered, return to the column heading level and press the ⌄ key. Prior to returning to the default display the following prompt will be given:

Update settings? Enter or clear

Pressing ↵ will result in the new settings being adopted, pressing C will cause the relay to discard the newly entered values. It should be noted that, the setting values will also be discarded if the menu time out occurs before the setting changes have been confirmed. Control and support settings will be updated immediately after they are entered, without the 'Update settings?' prompt.

1.9 Front communication port user interface

The front communication port is provided by a 9-pin female D-type connector located under the bottom hinged cover. It provides EIA(RS)232 serial data communication and is intended for use with a PC locally to the relay (up to 15 m distance) as shown in Figure 7. This port supports the Courier communication protocol only. Courier is the communication language developed by Schneider Electric to allow communication with its range of protection relays. The front port is particularly designed for use with the relay settings program MiCOM S1 Studio that is a Windows 98, Windows NT4.0, Windows 2000 or Windows XP based software package.

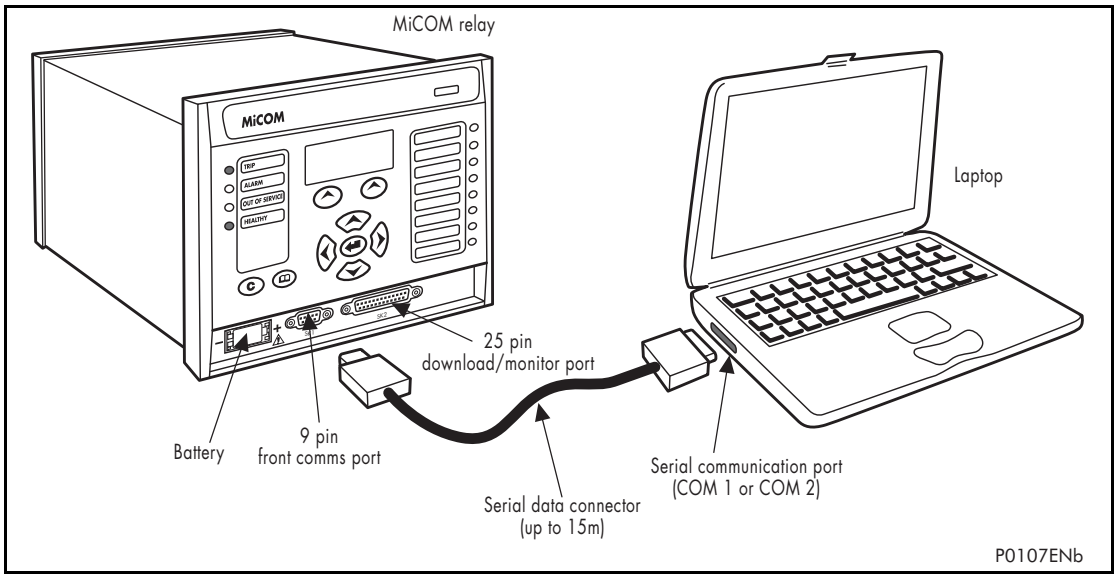

Figure 7: Front port connection

The relay is a Data Communication Equipment (DCE) device. Therefore the pin connections of the relay's 9-pin front port are as follows:

Pin no. 2	Tx Transmit data
Pin no. 3	Rx Receive data
Pin no. 5	0V Zero volts common

Table 6: Front port pin designation

None of the other pins are connected in the relay. The relay should be connected to the serial port of a PC, usually called COM1 or COM2. PCs are normally Data Terminal Equipment (DTE) devices which have a serial port pin connection as below (if in doubt check your PC manual):

	25 way	9 way	
Pin no. 2	3	2	Rx Receive data
Pin no. 3	2	3	Tx Transmit data
Pin no. 5	7	5	0V Zero volts common

Table 7: DTE devices serial port pin designation

GS

For successful data communication, the Tx pin on the relay must be connected to the Rx pin on the PC, and the Rx pin on the relay must be connected to the Tx pin on the PC, as shown in Figure 7. Therefore, providing that the PC is a DTE with pin connections as given above, a 'straight through' serial connector is required, i.e. one that connects pin 2 to pin 2, pin 3 to pin 3, and pin 5 to pin 5.

Note: A common cause of difficulty with serial data communication is connecting Tx to Tx and Rx to Rx. This could happen if a 'cross-over' serial connector is used, i.e. one that connects pin 2 to pin 3, and pin 3 to pin 2, or if the PC has the same pin configuration as the relay.

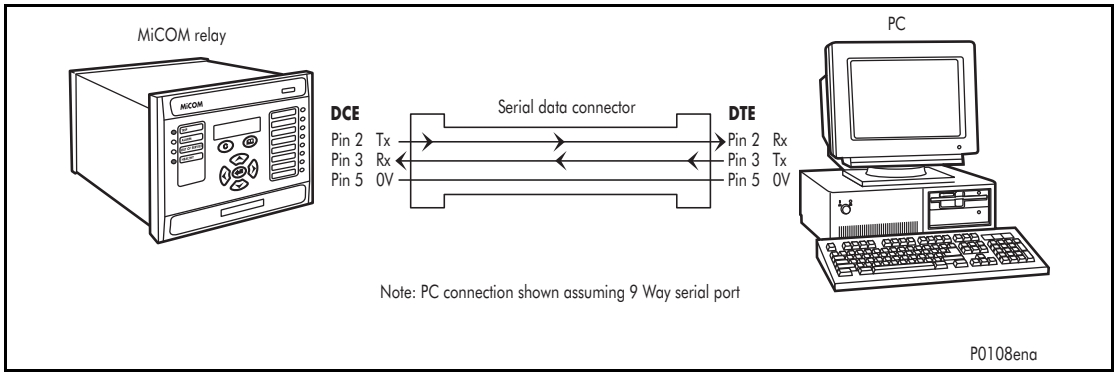

Figure 8: PC - relay signal connection

Having made the physical connection from the relay to the PC, the PC's communication settings must be configured to match those of the relay. The relay's communication settings for the front port are fixed as shown in the table below:

Protocol	Courier
Baud rate	19,200 bits/s
Courier address	1
Message format	11 bit - 1 start bit, 8 data bits, 1 parity bit (even parity), 1 stop bit

Table 8: Front port fixed communication settings

The inactivity timer for the front port is set at 15 minutes. This controls how long the relay will maintain its level of password access on the front port. If no messages are received on the front port for 15 minutes then any password access level that has been enabled will be revoked.

1.9.1 Front courier port

The front EIA(RS)232[1] 9 pin port supports the Courier protocol for one to one communication. It is designed for use during installation and commissioning/maintenance and is not suitable for permanent connection. Since this interface will not be used to link the relay to a substation communication system, some of the features of Courier are not implemented. These are as follows:

Automatic Extraction of Event Records:

- Courier Status byte does not support the Event flag
- Send Event/Accept Event commands are not implemented

Automatic Extraction of Disturbance Records:

- Courier Status byte does not support the Disturbance flag

Busy Response Layer:

- Courier Status byte does not support the Busy flag, the only response to a request will be the final data

Fixed Address:

[1] This port is actually compliant to EIA(RS)574; the 9-pin version of EIA(RS)232, see www.tiaonline.org.

- The address of the front courier port is always 1, the Change Device address command is not supported.

Fixed Baud Rate:

- 19200 bps

Note: Although automatic extraction of event and disturbance records is not supported it is possible to manually access this data via the front port.

1.10 MiCOM S1 Studio relay communications basics

The EIA(RS)232 front communication port is intended for use with the relay settings program MiCOM S1 Studio. This program runs on WindowsTM 2000, XP or Vista, and is the universal MiCOM IED Support Software used for direct access to all stored data in any MiCOM IED.

MiCOM S1 Studio provides full access to:

- MiCOM Px10, Px20, Px30, Px40, Modulex series, K series, L series relays
- MiCOM Mx20 measurements units

1.10.1 PC requirements

To run MiCOM S1 Studio on a PC, the following requirements are advised.

- Minimum
- 1 GHz processor
- 256 MB RAM
- WindowsTM 2000
- Resolution 800 x 600 x 256 colors
- 1 GB free hard disk space

Recommended

- 2 GHz processor
- 1 GB RAM
- WindowsTM XP
- Resolution 1024 x 768
- 5 GB free hard disk space

Microsoft WindowsTM Vista

- 2 GHz processor
- 1 GB RAM
- 5 GB free hard disk space
- MiCOM S1 Studio must be started with Administrator rights

1.10.2 Connecting to the relay using MiCOM S1 Studio

This section is intended as a quick start guide to using MiCOM S1 Studio and assumes you have a copy installed on your PC. See the MiCOM S1 Studio program online help for more detailed information.

1. Make sure the EIA(RS)232 serial cable is properly connected between the port on the front panel of the relay and the PC.
2. To start Micom S1 Studio, select **Programs** > **and navigate to** > **MiCOM S1 Studio** > **MiCOM S1 Studio**.
3. Click the **Quick Connect** tab and select **Create a New System**.
4. Check the **Path to System file** is correct, then enter the name of the system in the **Name** field. If you need to add a brief description of the system, use the **Comment** field.
5. Click **OK**.

6. Select the device type.
7. Select the communications port.
8. Once connected, select the language for the settings file, the device name, then click **Finish**. The configuration is updated.
9. In the **Studio Explorer** window, select **Device** > **Supervise Device**… to control the relay directly.

1.10.3 Off-line use of MiCOM S1 Studio

Micom S1 Studio can also be used as an off-line tool to prepare settings, without access to the relay.

1. If creating a new system, in the Studio Explorer, select **create new** system. Then right-click the new system and select **New substation**.
2. Right-click the new substation and select **New voltage level**.
3. Then right-click the new voltage level and select **New bay**.
4. Then right-click the new bay and select **New device**.
   You can add a device at any level, whether it is a system, substation, voltage or bay.
5. Select a device type from the list, then enter the relay type, such as P445. Click **Next**.
6. Enter the full model number and click **Next**.
7. Select the **Language** and **Model**, then click **Next**.
8. Enter a unique device name, then click **Finish**.
9. Right-click the **Settings** folder and select **New File**. A default file **000** is added.
10. Right-click file **000** and select click **Open**. You can then edit the settings. See the MiCOM S1 Studio program online help for more information.

GS

1.11 The User Programmable Curve Tool (UPCT)

The User Programmable Curve Tool allows the creation of user-defined curves and flexible download and upload of these curves into/from the MiCOM Px4x range of relays. This tool can be used to create user-programmable overcurrent and thermal operating and reset curves. For example, its user-friendly graphical user interface (GUI) allows easy creation and visualization of curves either by inputting a formula or data points.

1.11.1 Supporting software versions

The UPCT is supported by software version 57 onwards for the P24x series of Motor Protection Relays.

1.11.2 Application advantages of user-programmable curves

- Provide specific protection characteristics of customer schemes.
- Match more closely to the withstand characteristics for electrical equipment than standard curves.
- Provide compatibility with older relays and different manufacturers relays for retrofit/refurbishment.
- Data can be exported for protection grading and testing purposes.

1.11.3 The main features and overview of the User Configurable Curve Tool:

- Allows the user to create new configuration curve files or edit existing curve files
- Allows the user to enter a defined number of curve points (up to 256 points) or a user-defined formula
- Allows the user to create and save multiple formulae
- Allows the user-defined curve to be associated with a predefined curve Px4x template
- Allows interpolation between curve points
- Allows the user to save curve formulae in XML format and configured curve points in CSV format, enabling easy data exchange
- Allows the user to save template configured curve data in CRV format, suitable for download into the relay
- Enables easy upload of the curve data from a relay

- Allows the user to input formula constants with user-defined values
- Allows the user to easily set a definite minimum time (DMT) in the formula defined curves
- Graphically displays curves with zoom, pan, and point-on-curve facilities
- Color coding of multiple curves enables effective comparison
- Allows the user to print curves or save curves in a range of standard image formats

Please refer to the User Programmable Curve Tool Guide (*Px4x/EN UPCT*) for more information.

GS

ST

SETTINGS

Date:	**24th November 2009**
Hardware suffix:	**J (P241) K (P242/3)**
Software version:	**57**
Connection diagrams:	**10P241xx (xx = 01 to 02)**
	10P242xx (xx = 01)
	10P243xx (xx = 01)

ST

CONTENTS

1	**SETTINGS**	**7**
1.1	**Relay settings configuration**	**7**
1.2	**Protection settings**	**10**
1.2.1	System config	10
1.2.2	Thermal overload protection	10
1.2.3	Short circuit protection	11
1.2.4	Sensitive earth fault protection	12
1.2.5	Negative sequence overcurrent	14
1.2.6	Three phase voltage check	14
1.2.7	Derived earth fault	14
1.2.8	Stall detection	16
1.2.9	Motor differential protection (P243 only)	16
1.2.10	Residual overvoltage (neutral voltage displacement)	17
1.2.11	Limit number of starts protection	17
1.2.12	Loss of load (under power)	18
1.2.13	Out of step protection (under power factor)	19
1.2.14	Reverse power	19
1.2.15	Anti-Backspin protection	19
1.2.16	Field failure protection	20
1.2.17	Voltage protection	20
1.2.18	Under frequency protection	21
1.2.19	Resistor temperature device (RTD)	22
1.2.20	Circuit breaker fail	23
1.2.21	Supervision (VTS and CTS)	24
1.2.22	Current loop inputs and outputs (CLIO)	25
1.2.23	Input labels	28
1.2.24	Output labels	28
1.2.25	RTD labels	28
1.2.26	Analog Input labels	29
1.3	**Control and support settings**	**29**
1.3.1	System data	29
1.3.2	View records	31
1.3.3	Measurements 1	32
1.3.4	Measurements 2	34
1.3.5	Measurements 3 (product specific measurements)	34
1.3.6	Measurements 4 (product specific measurements)	35
1.3.7	Circuit breaker condition	36
1.3.8	Circuit breaker control	37

1.3.9 Date and time 37
1.3.10 CT and VT ratios 38
1.3.11 Record control 38
1.3.12 Disturbance recorder settings 39
1.3.13 Measurement setup 40
1.3.14 Communications 41
1.3.14.1 Communications settings for courier protocol 41
1.3.14.2 Communications settings for MODBUS protocol 41
1.3.14.3 Communications settings for IEC 60870-5-103 protocol 42
1.3.14.4 Communications settings for Ethernet port – IEC 61850 43
1.3.14.5 IED configurator (for IEC 61850 configuration) 43
1.3.14.6 Rear port 2 connection settings 44
1.3.15 Commissioning tests 45
1.3.16 Circuit breaker condition monitor setup 46
1.3.17 Opto configuration 47
1.3.18 Control inputs 47
1.3.19 Control input configuration 48
1.3.20 Function keys 48
1.3.21 Control input labels 49
1.3.22 PSL DATA column 49

TABLES

Table 1: General configuration settings 10
Table 2: System configuration settings 10
Table 3: Thermal over load protection settings 11
Table 4: Short circuit protection settings 12
Table 5: Sensitive earth fault protection settings 14
Table 6: Negative sequence overcurrent protection settings 14
Table 7: Three phase voltage check setting 14
Table 8: Derived earth fault protection settings 16
Table 9: Stall protection settings 16
Table 10: Differential protection settings 17
Table 11: Residual overvoltage protection settings 17
Table 12: Limit number of start protection settings 18
Table 13: Loss of load protection settings 19
Table 14: Out of step protection settings 19
Table 15: Reverse power protection settings 19
Table 16: Anti-Backspin protection settings 20
Table 17: Field failure protection settings 20
Table 18: Under/Overvoltage protection settings 21
Table 19: Underfrequency protection settings 22
Table 20: RTD protection settings 23
Table 21: CBF protection settings 24
Table 22: VTS and CTS protection settings 25
Table 23: Current loop inputs and outputs settings 26
Table 24: Current loop inputs units and setting ranges 27
Table 25: Current loop outputs units and setting range 28
Table 26: Input labels settings 28
Table 27: Output labels settings 28
Table 28: RTD labels settings 29
Table 29: Current loop analog input label settings 29
Table 30: System data 31
Table 31: View records settings 32
Table 32: Measurement 1 menu 34
Table 33: Measurement 2 menu 34
Table 34: Measurement 3 menu 35
Table 35: Measurement 4 menu 36
Table 36: Circuit breaker condition menu 37
Table 37: Circuit breaker control settings 37
Table 38: Date and time menu 38
Table 39: CT and VT ratio settings 38

Table 40: Record control menu 39
Table 41: Disturbance record settings 40
Table 42: Measurement setup settings 41
Table 43: Communication settings for courier protocol 41
Table 44: Communication settings for MODBUS protocol 42
Table 45: Communication settings for IEC-103 protocol 43
Table 46: Communication settings for IEC-61850 protocol 43
Table 47: IEC-61850 IED configurator 44
Table 48: Rear port connection settings 45
Table 49: Commissioning tests menu cells 46
Table 50: Circuit breaker condition monitoring menu 47
Table 51: Opto inputs configuration settings 47
Table 52: Control inputs settings 48
Table 53: Control inputs configuration settings 48
Table 54: Function keys configuration settings 49
Table 55: Control input label settings 49
Table 56: PSL data menu 49

1 SETTINGS

The P241/2/3 must be configured to the system and application by means of appropriate settings. The sequence in which the settings are listed and described in this chapter will be the protection settings, control and configuration settings and the disturbance recorder settings. The relay is supplied with a factory-set configuration of default settings.

1.1 Relay settings configuration

The relay is a multi-function device that supports numerous different protection, control and communication features. To simplify the setting of the relay, there is a configuration settings column which can be used to enable or disable many of the functions of the relay. The settings associated with any function that is disabled are made invisible; for example they are not shown in the menu. To disable a function change the relevant cell in the **Configuration** column from **Enabled** to **Disabled**.

The configuration column controls which of the two protection settings groups is selected as active through the **Active settings** cell. A protection setting group can also be disabled in the configuration column, provided it is not the present active group. Similarly, a disabled setting group cannot be set as the active group.

The configuration column also allows all of the setting values in one group of protection settings to be copied to another group.

To do this first set the **Copy from** cell to the protection setting group to be copied, then set the **copy to** cell to the protection group where the copy is to be placed. The copied settings are initially placed in a temporary scratchpad and will only be used by the relay following confirmation.

To restore the default values to the settings in any protection settings group, set the **restore defaults** cell to the relevant group number. It is possible to set the **restore defaults** cell to **all settings** to restore the default values to all of the relay's settings, not just the protection groups' settings. The default settings will initially be placed in the scratchpad and will only be used by the relay after they have been confirmed.

Note: Restoring defaults to all settings including the rear communication port settings may result in communication via the rear port being disrupted if the new (default) settings do not match those of the master station.

Menu text	Default setting	Available settings
Restore Defaults	No Operation	No Operation All Settings Setting Group 1 Setting Group 2
Setting to restore a setting group to factory default settings.		
Setting Group	Select via Menu	Select via Menu Select via Optos
Allows setting group changes to be initiated via opto inputs via Setting Group DDB signal in the programmable scheme logic or via the Menu settings.		
Active Settings	Group 1	Group 1, Group 2
Selects the active setting group.		
Save Changes	No Operation	No Operation, Save, Abort
Saves all relay settings.		
Copy from	Group 1	Group 1, 2
Allows displayed settings to be copied from a selected setting group.		
System Config	Visible	Invisible or Visible
Sets the System Config menu visible further on in the relay settings menu.		
Copy to	No Operation	No Operation Group 1, 2
Allows displayed settings to be copied to a selected setting group. (ready to paste).		

Menu text	Default setting	Available settings
Setting Group 1	Enabled	Enabled or Disabled
To enable or disable Group 1 settings. If the setting group is disabled from the configuration, then all associated settings and signals are hidden, with the exception of this setting. (paste).		
Setting Group 2 (as above)	Disabled	Enabled or Disabled
Thermal Overload	Enabled	Enabled or Disabled
Enables (activates) or disables (turns off) the Thermal Overload protection function. ANSI 49.		
Short Circuit	Enabled	Enabled or Disabled
Enables (activates) or disables (turns off) the Short Circuit Protection function. ANSI 50/51.		
Sensitive E/F	Enabled	Enabled or Disabled
Enables (activates) or disables (turns off) the Sensitive Earth Fault protection function and Wattmetric earth fault element. ANSI 50N/51N/67N/32N/64N.		
Neg. Seq. O/C	Enabled	Enabled or Disabled
Enables (activates) or disables (turns off) the Negative Sequence Overcurrent protection function. ANSI 46.		
3PH Volt Check	Disabled	Enabled or Disabled
Enables (activates) or disables (turns off) the Reverse phase sequence (V2>V1) and undervoltage detection function. ANSI 47.		
Derived E/F	Disabled	Enabled or Disabled
Enables (activates) or disables (turns off) the Derived Earth Fault Protection function. ANSI 50N/51N.		
Stall Detection	Enabled	Enabled or Disabled
Enables (activates) or disables (turns off) the Stalling Protection function. ANSI 50S.		
Differential	Disabled	Enabled or Disabled
Enables (activates) or disables (turns off) the Motor Differential protection function. ANSI 87.		
Residual O/V NVD	Disabled	Enabled or Disabled
Enables (activates) or disables (turns off) the Residual Overvoltage (Neutral Voltage Displacement) Protection function. ANSI 59N.		
Limit Nb Starts	Enabled	Enabled or Disabled
Enables (activates) or disables (turns off) the Limit Number of Starts Protection function. ANSI 48/51LR/66		
Loss of Load	Disabled	Enabled or Disabled
Enables (activates) or disables (turns off) the Loss of Load Protection function. ANSI 37		
Out of Step	Disabled	Enabled or Disabled
Enables (activates) or disables (turns off) the Out of Step (Underpower Factor) Protection function. ANSI 55.		
Reverse Power	Disabled	Enabled or Disabled
Enables (activates) or disables (turns off) the Reverse Power Protection function. ANSI 32R.		
Anti-Backspin	Disabled	Enabled or Disabled
Enables (activates) or disables (turns off) the Anti-Backspin Protection function. ANSI 27 (Remanent voltage).		
Field Failure	Disabled	Enabled Disabled
Enables (activates) or disables (turns off) the Field Failure protection function ANSI 40		

ST

Menu text	Default setting	Available settings
Volt Protection	Enabled	Enabled or Disabled
Enables (activates) or disables (turns off) the Volt Protection (Under/Overvoltage) function. ANSI 27/59.		
Under Frequency	Disabled	Enabled or Disabled
Enables (activates) or disables (turns off) the Under Frequency protection function. ANSI 81U		
RTD Inputs	Disabled	Enabled or Disabled
Enables (activates) or disables (turns off) the RTD (Resistance Temperature Device) Inputs.		
CB Fail	Disabled	Enabled or Disabled
Enables (activates) or disables (turns off) the Circuit Breaker Fail Protection function. ANSI 50BF.		
Input Labels	Visible	Invisible or Visible
Sets the Input Labels menu visible in the relay settings menu.		
Output Labels	Visible	Invisible or Visible
Sets the Output Labels menu visible in the relay settings menu.		
RTD Labels	Visible	Invisible or Visible
Sets the RTD Labels menu visible in the relay settings menu.		
CT & VT Ratios	Visible	Invisible or Visible
Sets the Current & Voltage Transformer Ratios menu visible in the relay settings menu.		
Record Control	Visible	Invisible or Visible
Sets the Record Control menu visible in the relay settings menu.		
Disturb. Recorder	Visible	Invisible or Visible
Sets the Disturbance Recorder menu visible in the relay settings menu.		
Measure't. Set-up	Visible	Invisible or Visible
Sets the Measurement Setup menu visible in the relay settings menu.		
Comms. Settings	Visible	Invisible or Visible
Sets the Communications Settings menu visible in the relay settings menu. These are the settings associated with the first and second rear communications ports.		
Commission Tests	Visible	Invisible or Visible
Sets the Commissioning Tests menu visible in the relay settings menu.		
Setting Values	Primary	Primary or Secondary
This affects all protection settings that are dependent upon CT and VT ratio's.		
Control Inputs	Visible	Invisible or Visible
Sets the Control Inputs menu visible in the relay setting menu.		
CLIO Inputs	Enabled	Enabled or Disabled
Enables (activates) or disables (turns off) the CLIO (Current Loop Input Output) Inputs function.		
CLIO Outputs	Enabled	Enabled or Disabled
Enables (activates) or disables (turns off) the CLIO (Current Loop Input Output) Outputs function.		
CLIO Labels		
Enables (activates) or disables (turns off) the CLIO (Current Loop Input Output) Labels.		
Ctrl I/P Config.	Invisible	Invisible or Visible
Sets the Control Input Configuration menu visible in the relay setting menu.		
Ctrl I/P Labels	Invisible	Invisible or Visible
Sets the Control Input Labels menu visible in the relay setting menu.		
Direct Access	Disabled	Enabled/Disabled/Hotkey
Defines what controls are available via the direct access keys - Enabled (Hotkey and CB Control functions) / Hotkey Only (Control Inputs and Setting group selection) / CB Cntrl Only (CB open/close).		

Menu text	Default setting	Available settings
Function Key	Visible	Invisible or Visible
Sets the Function Key menu visible in the relay setting menu.		
LCD Contrast	11	0…31
Sets the LCD contrast. To confirm acceptance of the contrast setting the relay prompts the user to press the right and left arrow keys together instead of the enter key as an added precaution to someone accidentally selecting a contrast which leaves the display black or blank. **Note:** The LCD contrast can be set using the front port communications port with the S1 setting software if the contrast is set incorrectly such that the display is black or blank.		

Table 1: General configuration settings

1.2 Protection settings

The protection settings include all the following items that become active once enabled in the configuration column of the relay menu database:

- Protection element settings.
- Scheme logic settings.

ST

There are two groups of protection settings, with each group containing the same setting cells. One group of protection settings is selected as the active group, and is used by the protection elements. The settings for group 1 only are shown below. The settings are discussed in the same order in which they are displayed in the menu.

1.2.1 System config

A facility is provided in the P241/2/3 to maintain correct operation of all the protection functions even when the motor is running in a reverse phase sequence. This is achieved through user configurable settings available for the two setting groups.

Menu text	Default setting	Setting range		Step size
		Min	Max	
GROUP 1: SYSTEM CONFIG				
Phase Sequence	Standard ABC	Standard ABC, Reverse ACB		N/A
The Phase Sequence setting applies to a power system that has a permanent phase sequence of either ABC or ACB.				

Table 2: System configuration settings

1.2.2 Thermal overload protection

The thermal overload function within the P241/2/3 relay uses a multiple time constant thermal replica. This replica takes into account the overheating generated by the negative phase sequence current in the motor.

Menu text	Default setting	Setting range		Step size
		Min	Max	
GROUP 1: THERMAL OVERLOAD				
Ith Current Set	1 In	0.2 In	1.5 In	0.01 In
Thermal overload current setting.				
K Coefficient	3	0	10	1
Negative sequence current heating factor.				
Thermal Const T1	20 min	1 min	180 min	1 min
Overload time constant.				
Thermal Const T2	20 min	1 min	360 min	1 min
Start-up time constant.				

Menu text	Default setting	Setting range		Step size
		Min	Max	
GROUP 1: THERMAL OVERLOAD				
Cooling Const Tr	20 min	1 min	999 min	1 min
Cooling time constant.				
Thermal Trip	Enabled	Enabled/Disabled		
Enables or disables tripping of the relay if the thermal setting is exceeded.				
Thermal Alarm	Enabled	Enabled/Disabled		
Enables or disables the setting of an alarm threshold for the thermal state.				
Alarm Threshold	90%	0.2%	100%	0.01%
Thermal alarm threshold (in percentage).				
Thermal Lockout	Enabled	Enabled/Disabled		
Enables or disables the lockout of a restart if the thermal state exceeds a threshold.				
Lockout Thresh	20%	0.2%	100%	0.01%
Thermal state setting for the thermal lockout protection (in percentage).				
Inh Trip Dur St	Disabled	Enabled, Disabled		
Inhibits a trip during the start sequence of the motor until Thermal State < Lockout Threshold.				
Thermal Overload	Thermal Model	Thermal Model, User Curve		
Choice of default Thermal Model or a user pre-programmed operate thermal curve which has been downloaded to the relay using the programmable curve tool. There are 4 Curve Characteristics that can be sent to the relay from the Programmable Curve Tool - Curve 1, Curve 2, Curve 3 and Curve 4. Curve 3 is defined as the thermal operate curve.				
Reset	Thermal Model	Thermal Model, User Curve		
Choice of default Thermal Model or a user pre-programmed reset thermal curve which has been downloaded to the relay using the programmable curve tool. There are 4 Curve Characteristics that can be sent to the relay from the Programmable Curve Tool - Curve 1, Curve 2, Curve 3 and Curve 4. Curve 4 is defined as the thermal reset curve.				

Table 3: Thermal over load protection settings

ST

1.2.3 Short circuit protection

The short circuit protection included in the P241/2/3 relay provides four stage non-directional three-phase overcurrent protection with independent time delay characteristics. All overcurrent settings apply to all three phases but are independent for each of the four stages.

The first two stages of overcurrent protection have time-delayed characteristics which are selectable between inverse definite minimum time (IDMT), definite time (DT) and User Curve. The third and fourth stages have definite time characteristics only.

Menu text	Default setting	Setting range		Step size
		Min.	Max.	
GROUP 1 SHORT CIRCUIT				
I>1 Function	IEC S Inverse	Disabled, DT, IEC S Inverse, IEC V Inverse, IEC E Inverse, UK LT Inverse, UK Rectifier, RI, IEEE M Inverse, IEEE V Inverse, IEEE E Inverse, US Inverse, US ST Inverse, User Curve.		
Tripping characteristic for the first stage overcurrent protection. There are 4 User Curve Characteristics that can be sent to the relay from the Programmable Curve Tool - Curve 1, Curve 2, Curve 3 and Curve 4. Curve 1 is defined as the Short Circuit or Sensitive E/F or Derived Earth Fault operate curve. Curve 2 is defined as the Short Circuit or Sensitive E/F or Derived Earth Fault reset curve. When the User Curve1 is chosen as operate curve, its corresponding reset curve is automatically chosen as the one assigned in the User Programmable Curve Tool.				

Menu text	Default setting	Setting range		Step size
		Min.	Max.	
I>1 Current Set	7.5 In	0.2 In	15 In	0.1 In
Pick-up setting for first stage overcurrent protection.				
I>1 Time Delay	0.1	0.04	100	0.01
Operating time-delay setting for the definite time setting if selected for first stage element.				
I>1 TMS	1	0.025	1.2	0.025
Time multiplier setting to adjust the operating time of the IEC IDMT characteristic.				
I>1 Time Dial	7	0.5	15	0.1
Time multiplier setting to adjust the operating time of the IEEE/US IDMT and User curves.				
I>1 K (RI)	1	0.1	10	0.05
Time multiplier setting to adjust the operating time for the RI curve.				
I>1 Reset Char	DT	DT or Inverse, User Curve		N/A
Type of reset/release characteristic of the IEEE/US curves. There are 4 User Curve Characteristics that can be sent to the relay from the Programmable Curve Tool - Curve 1, Curve 2, Curve 3 and Curve 4. Curve 2 is defined as the Short Circuit or Sensitive E/F or Derived Earth Fault reset curve. When the User Curve1 is chosen as operate curve, its corresponding reset curve is automatically chosen as the one assigned in the User Programmable Curve Tool.				
I>1 tRESET	0	0 s	100 s	0.01 s
Reset/release time setting for definite time reset characteristic.				
I>2 Cells as for I>1 above				
Setting the same as for the first stage overcurrent protection.				
I>3 Function	Disabled	Disabled or Enabled		N/A
Enable or disables the third stage overcurrent protection.				
I>3 Current Set	15 In	0.2 In	15 In	0.1 In
Pick-up setting for third stage overcurrent protection.				
I>3 Time Delay	0.04	0.04 s	100 s	0.01 s
Operating time-delay setting for third stage overcurrent protection.				
I>4 Cells as for I>3 Above				
Settings the same as the third stage overcurrrent protection.				

Table 4: Short circuit protection settings

1.2.4 Sensitive earth fault protection

The Sensitive Earth Fault protection included in the P241/2/3 relay two stages of directional/non-directional, sensitive earth fault protection. The SEF element can also be configured as a wattmetric earth fault element.

Menu text	Default setting	Setting range		Step size
		Min	Max	
Group 1: SENSITIVE E/F				
ISEF>1 Function	IEC Standard Inverse	Disabled, DT, IEC S Inverse, IEC V Inverse, IEC E Inverse, UK LT Inverse, IEEE M Inverse, IEEE V Inverse, IEEE E Inverse, US Inverse, US ST Inverse, User Curve.		
Selection of the first stage sensitive earth fault element. There are 4 User Curve Characteristics that can be sent to the relay from the Programmable Curve Tool - Curve 1, Curve 2, Curve 3 and Curve 4. Curve 1 is defined as the Short Circuit or Sensitive E/F or Derived Earth Fault operate curve. Curve 2 is defined as the Short Circuit or Sensitive E/F or Derived Earth Fault reset curve. When the User Curve1 is chosen as operate curve, its corresponding reset curve is automatically chosen as the one assigned in the User Programmable Curve Tool.				

Menu text	Default setting	Setting range		Step size
		Min	Max	
Group 1: SENSITIVE E/F				
ISEF>1 Direction	Non-Directional	Non-directional / Fwd / Directional		
Selection of the directional first stage sensitive earth fault element.				
ISEF>1 Current	0.2 In	0.005 In	1 In	0.001 In
Current setting for the first stage sensitive earth fault element.				
ISEF>1 T Delay	1 sec	0.04 sec	200 sec	0.01sec
Definite Time setting for first stage sensitive earth fault element if ISEF>1 Function is selected as DT.				
ISEF>1 TMS	1	0.025	1.2	0.025
Time Multiplier setting for first stage sensitive earth fault element if ISEF>1 Function has an Inverse Definite Minimum Time (IDMT) setting.				
ISEF>1 Time Dial	7	0.5	15	0.1
Time Dial setting for first stage sensitive earth fault element if ISEF>1 Function is set as a US inverse time curve.				
ISEF>1 Reset Chr	DT	DT, Inverse, User Curve		
Time reset characteristic for first stage sensitive earth fault element if ISEF>1 Function is set as a US Inverse time curve. There are 4 User Curve Characteristics that can be sent to the relay from the Programmable Curve Tool - Curve 1, Curve 2, Curve 3 and Curve 4. Curve 2 is defined as the Short Circuit or Sensitive E/F or Derived Earth Fault reset curve. When the User Curve1 is chosen as operate curve, its corresponding reset curve is automatically chosen as the one assigned in the User Programmable Curve Tool.				
ISEF>1 tReset	0 sec	0 sec	100 sec	0.01 sec
Reset time setting for first stage sensitive earth fault element if ISEF>1 Function is set as Inverse Definite Minimum Time (IDMT).				
ISEF>2 Function	Disabled	Disabled, DT		
Enables or disables the second stage sensitive overcurrent element.				
ISEF>2 Direction	Non-directional	Non-directional / Fwd / Directional		
Selection of the directional second stage sensitive earth fault element.				
ISEF>2 Current	0.2 In	0.005 In	1 In	0.001 In
Current setting for the second stage sensitive earth fault element.				
ISEF> 2 T Delay	1 sec	0.04 sec	200 sec	0.01 sec
Definite Time (DT) setting for the second stage sensitive earth fault element.				
ISEF> Directional	Menu Sub-heading			
ISEF> Char Angle	-45°	-180°	+180°	1°
Characteristic angle for the sensitive earth fault directional element.				
ISEF> VN Pol Set	5 V	0.5 V	25 V	0.5 V
Minimum voltage reference setting for the sensitive earth fault directional element.				
Wattmetric SEF	Menu Sub-heading			
PO> Function	Disabled	Disabled, Enabled		
Enables or Disables the Wattmetric sensitive directional earth fault element.				
PO> Current Set	0.2 In	0.005 In	1 In	0.001 In
Current setting for the Wattmetric sensitive directional earth fault element.				
PO Voltage Set	5 V	0.5 V	80 V	0.5 V
Voltage setting for the Wattmetric sensitive directional earth fault element.				
PO> Coeff K Set	1	1	10	1
Power Threshold setting for the Wattmetric sensitive directional earth fault element.				
PO> Char Angle	0°	-180°	+180°	1°
Characteristic angle setting for the Wattmetric sensitive directional earth fault element.				

Menu text	Default setting	Setting range		Step size
		Min	Max	
Group 1: SENSITIVE E/F				
PO> Time Delay	0.2 sec	0.04 sec	100 sec	0.01 sec
Time Delay setting for the Wattmetric sensitive directional earth fault element.				
ISEF> VTS Blocking	3	0	3	1
Setting that determines whether VT supervision logic signals blocks the sensitive earth fault stage. When the relevant bit is set to 1, operation of VTS will block the stage if directionalized, when set to 0 the function will be settled to Non-directional.				

Table 5: Sensitive earth fault protection settings

1.2.5 Negative sequence overcurrent

The Negative sequence overcurrent protection included in the P241/2/3 relay provides 2 stages of NPS. The first stage can be selected as Definite Time (DT) only and the second stage can be selected as Inverse Definite Minimum Time (IDMT) only.

ST

Menu text	Default setting	Setting range		Step size
		Min	Max	
Group 1: NEG SEQ O/C				
I2>1 Status	DT	Disabled, DT		
Enables or Disables the first stage negative sequence overcurrent (NPS) element.				
I2>1 Current Set	0.3 In	0.05 In	0.8 In	0.025 In
Current setting for the first stage negative sequence overcurrent (NPS) element.				
I2>1 Time Delay	0.2 sec	0.04 sec	200 sec	0.01 sec
Definite Time (DT) setting for the first stage negative sequence overcurrent (NPS) element.				
I2>2 Status	Disabled	Disabled, IDMT		
Enables or Disables the second stage negative sequence overcurrent (NPS) element.				
I2>2 Current Set	0.5 In	0.05 In	0.8 In	0.05 In
Current setting for the second stage negative sequence overcurrent (NPS) element.				
I2>2 TMS	1	0.07	2	0.025
Time Multiplier Setting (TMS) for the second stage negative sequence overcurrent (NPS) element.				

Table 6: Negative sequence overcurrent protection settings

1.2.6 Three phase voltage check

The three phase voltage check function included in the P241/2/3 relay provides a single low voltage threshold setting, which ensures both correct phase rotation (V1 > V2) and sufficient supply voltage prior to permitting motor starting.

Menu text	Default setting	Setting range		Step size
		Min.	Max.	
GROUP 1: 3PH VOLT CHECK				
Start Low V Set	100 V	10 V	120 V	1 V
Phase-Neutral Low Voltage threshold setting.				

Table 7: Three phase voltage check setting

1.2.7 Derived earth fault

The Derived Earth Fault function within the P241/2/3 relay provides 2 stages of derived directional earth fault protection. Stage 1 can be set Definite Time (DT) or Inverse Definite Minimum Time (IDMT) or User Curve and stage 2 can be set Definite Time (DT) only.

Menu text	Default setting	Setting range		Step size
		Min.	Max.	
GROUP 1: DERIVED EARTH FAULT				
IN>1 Function	IEC S Inverse	Disabled, DT, IEC S Inverse, IEC V Inverse, IEC E Inverse, UK LT Inverse, IEEE M Inverse, IEEE V Inverse, IEEE E Inverse, US Inverse, US ST Inverse, User Curve.		
Selection of the first stage derived earth fault element. There are 4 User Curve Characteristics that can be sent to the relay - Curve 1, Curve 2, Curve 3 and Curve 4. Curve 1 is defined as the Short Circuit or Sensitive E/F or Derived Earth Fault operate curve. Curve 2 is defined as the Short Circuit or Sensitive E/F or Derived Earth Fault reset curve. When the User Curve1 is chosen as operate curve, its corresponding reset curve is automatically chosen as the one assigned in the User Programmable Curve Tool.				
IN>1 Direction	Non-Directional	Non-directional Directional Fwd		
Selection of the directional first stage derived earth fault element.				
IN>1 Current	0.2 In	0.08 In	32 In	0.01 In
Current setting for the first stage derived earth fault element.				
IN>1 T Delay	1	0.04 sec	100 sec	0.1 sec
Definite Time setting for first stage derived earth fault element if IN>1 Function is selected as DT.				
IN>1 TMS	1	0.025	1.2	0.025
Time Multiplier setting for first stage sensitive earth fault element if IN>1 Function has an Inverse Definite Minimum Time (IDMT) setting.				
IN>1 Time Dial	7	0.5	15	0.1
Time Dial setting for first stage derived earth fault element if IN>1 Function is set as a US inverse time curve.				
IN>1 Reset Chr	DT	DT, Inverse, User Curve		
Time reset characteristic for first stage derived earth fault element if IN>1 Function is set as a US Inverse time curve. There are 4 User Curve Characteristics that can be sent to the relay from the Programmable Curve Tool - Curve 1, Curve 2, Curve 3 and Curve 4. Curve 2 is defined as the Short Circuit or Sensitive E/F or Derived Earth Fault reset curve. When the User Curve1 is chosen as operate curve, its corresponding reset curve is automatically chosen as the one assigned in the User Programmable Curve Tool.				
IN>1 tReset	0	0 sec	100 sec	0.01 sec
Reset time setting for first stage derived earth fault element if IN>1 Function is set as Inverse Definite Minimum Time (IDMT).				
IN>2 Function	Disabled	Disabled, DT		
Enables or Disables the second stage derived earth fault element.				
IN>2 Direction	Non-Directional	Non-directional Directional Fwd		
Selection of the directional second stage derived earth fault element.				
IN>2 Current	0.2 In	0.08 In	32 In	0.01 In
Current setting for the second stage derived earth fault element.				
IN>2 T Delay	1	0.04	100 sec	0.01 sec
Definite Time (DT) setting for the second stage derived earth fault element.				
IN> Directional	Menu Sub-heading			
IN> Char Angle	-45°	-180°	+180°	1°
Characteristic angle for the derived earth fault directional element.				

ST

Menu text	Default setting	Setting range		Step size
		Min.	Max.	
IN> Pol Type	Zero Sequence	Zero sequence, Neg sequence		
Selection of polarization type depending on VT connection used.				
IN> VN Pol Set	5 V	0.5 V	25 V	0.5 V
Minimum voltage reference setting for the derived earth fault directional element.				
IN> V2pol Set	5 V	0.5 V	25 V	0.5 V
Minimum Negative sequence Voltage reference setting for the derived earth fault directional element.				
IN2> I2pol Set	0.08 In	0.002 In	0.8 In	0.001 In
Minimum Negative sequence current reference setting for the derived earth fault directional element.				
IN> VTS Blocking	3	0	3	1
Setting that determines whether VT supervision logic signals blocks the derived earth fault stage. When the relevant bit is set to 1, operation of VTS will block the stage if directionalized, when set to 0 the function will be settled to Non-directional.				

Table 8: Derived earth fault protection settings

ST

1.2.8 Stall detection

The Stall detection in the P241/2/3 relay is available for protection of the motor during the starting sequence.

Menu text	Default setting	Setting range		Step size
		Min	Max	
GROUP 1: STALL DETECTION				
Prolonged Start	Enabled	Disabled, Enabled		
Enables or disables the detection of a prolonged start.				
Start Criteria	52a	52a 52a + I		
Selects the detection method of a motor start. Options are change of state of Circuit Breaker (52a), exceeding the start current threshold or both.				
Starting Current	3 In	1 In	5 In	0.5 In
Starting current setting. A normal start will be detected if the current falls below this threshold within the prolonged start time setting. Setting in multiples of Ith Thermal Overload setting.				
Prol Start time	5 sec	1 sec	200 sec	1 sec
Starting supervision time. The motor current has to fall below the starting current threshold within this time for a normal start to be detected.				
Stall Rotor-Strt	Disabled	Disabled, Enabled		
Enables or disables the locked rotor during starting element. Used in conjunction with the speed switch input if the starting time is greater than the safe stall time.				
Stall Detection	Enabled	Disabled, Enabled		
Enables or disables the stall detection element.				
Stall Setting	3 In	1 In	5 In	0.5 In
Stall current setting.				
Stall Time	2 sec	0.1 sec	60 sec	0.1 sec
Stall Time Delay setting.				
Reacceleration	Disabled	Disabled, Enabled		
Enables or disables the reacceleration of the motor following a reduction in system voltage.				
Reacc Low V Set	100 V	50 V	120 V	1 V
Undervoltage setting for the reacceleration element (Ph-Ph).				

Table 9: Stall protection settings

1.2.9 Motor differential protection (P243 only)

The differential protection included in the P243 relay may be configured to operate as either a high impedance or biased differential element.

Menu text	Default setting	Setting range		Step size
		Min.	Max.	
GROUP 1: DIFFERENTIAL				
Diff Function	Percentage Bias	Disabled Percentage Bias High Impedance		
Setting to select the function of the differential protection element.				
Diff Is1	0.1 In	0.05 In	0.5 In	0.01 In
Minimum differential operating current of the low impedance biased characteristic. Also, the pick-up setting of the high impedance differential protection.				
Diff K1	0%	0 %	20%	5%
Slope angle setting for the first slope of the low impedance biased characteristic.				
Diff Is2	1.2 In	1 In	5 In	0.1 In
The bias current operating threshold for the second slope, low impedance characteristic.				
Diff K2	150%	20%	150%	10%
Slope angle setting for the second slope of the low impedance biased characteristic.				

Table 10: Differential protection settings

1.2.10 Residual overvoltage (neutral voltage displacement)

The neutral voltage displacement (NVD) element within the P241/2/3 relay is of two-stage design, each stage having separate voltage and time delay settings. Stage 1 may be set to operate on either an IDMT or DT characteristic, whilst stage 2 may be set to DT only.

Menu text	Default setting	Setting range		Step size
		Min.	Max.	
GROUP 1: RESIDUAL O/V NVD				
VN>1 Function	Disabled	Disabled DT IDMT		
Selection of the first stage residual overvoltage (NVD) element.				
VN>1 Voltage Set	5 V	0.5 V	80 V	0.5 V
Voltage setting for the first stage residual overvoltage (NVD) element.				
VN>1 Time Delay	5 sec	0.04 sec	100 sec	0.01 sec
Definite Time (DT) setting for the first stage residual overvoltage (NVD) element if VN>1 Function is set as DT.				
VN>1 TMS	1	0.05	100	0.05
Time Multiplier setting for the first stage residual overvoltage (NVD) element if VN>1 Function is set as IDMT.				
VN>2 Status	Disabled	Disabled, DT		
Enables or disables the second stage residual overvoltage (NVD).				
VN>2 Voltage Set	10 V	0.5 V	80 V	0.5 V
Voltage setting for the second stage residual overvoltage (NVD) element.				
VN>2 Time Delay	10 sec	0.04 sec	100 sec	0.01 sec
Definite Time (DT) setting for the second stage residual overvoltage (NVD) element.				

Table 11: Residual overvoltage protection settings

1.2.11 Limit number of starts protection

The start protection within the P241/2/3 relay supervises the maximum allowable number of starts, hot or cold, that the motor is permitted for. The relay distinguishes between a hot start or a cold start by using the data held in the motor thermal replica. Starting is blocked if the permitted number of starts is exceeded by the use of a time between starts timer.

Menu text	Default setting	Setting range		Step size
		Min.	Max.	
GROUP 1: LIMIT NB STARTS				
Hot Start status	Disabled	Disabled, Enabled		
Enables or disables the setting of a maximum number of hot starts before a relay issues an alarm.				
Hot start Nb	1	1	5	1
Maximum number of hot starts allowed before starting of the motor is inhibited.				
Cold Start Stat	Disabled	Disabled, Enabled		
Enables or disables the setting of a maximum number of cold starts before a relay issues an alarm.				
Cold start Nb	1	1	5	1
Maximum number of cold starts allowed before starting of the motor is inhibited.				
Supervising Time	10 min	10 min	120 min	1 min
Supervising period for the number of hot and cold starts.				
T Betw St Status	Disabled	Disabled, Enabled		
Enables or disables the setting of a minimum time between motor starts.				
Time betw start	2 min	1 min	120 min	1 min
Minimum time period setting allowable between each motor start.				
Inhib Start Time	10 min	1 min	120 min	1 min
Inhibition time setting. If the maximum number of starts (hot or cold) is reached, this time delay will start and inhibit a new start before it ends.				

Table 12: Limit number of start protection settings

1.2.12 Loss of load (under power)

The Loss of Load protection within the P241/2/3 relay uses 2 underpower elements to detect a loss of load due to a shaft failure or a pump running unprimed. Both stages are selectable to Definite Time (DT). This feature is only enabled when the circuit breaker is closed, therefore it requires a 52a CB auxiliary contact mapped to an opto input to monitor the breaker status.

Menu text	Default setting	Setting range		Step size
		Min	Max	
GROUP1: LOSS OF LOAD				
P<1 Status	DT	Disabled, DT		
Enables or disables the first stage underpower element.				
P<1 Power Set	1 In W	1 In W	120 In W	1 In W
First stage underpower threshold.				
P<1 Time Delay	0.2 sec	0.04 sec	100 sec	0.01 sec
Definite Time (DT) setting for first stage underpower element.				
P<2 Status	Disabled	Disabled, DT		
Enables or disables the second stage underpower element.				
P<2 Power Set	1 In W	1 In W	120 In W	1 In W
Second stage undrepower threshold.				
P<2 Time Delay	0.2 sec	0.04 sec	100 sec	0.01 sec
Definite Time (DT) setting for second stage underpower element.				

Menu text	Default setting	Setting range		Step size
		Min	Max	
GROUP1: LOSS OF LOAD				
P<Drop-off Time	5 sec	0.05 sec	300 sec	0.05 sec
Time delay on drop-off to ensure inhibition during motor starting.				

Table 13: Loss of load protection settings

1.2.13 Out of step protection (under power factor)

The P241/2/3 relays provide power factor protection on synchronous machines by monitoring the 3 phase power factor. Both Lead and Lag elements are settable to Definite Time (DT). This feature is only enabled when the circuit breaker is closed, therefore it requires a 52 a CB auxiliary contact mapped to an opto input to monitor the breaker status.

Menu text	Default setting	Setting range		Step size
		Min.	Max.	
GROUP 1: OUT OF STEP				
PF< Status Lead	DT	Disabled, DT		
Enables or disables the lead level element of the under power factor protection.				
Power Fact Lead	0.9	0.1	0.9	0.1
Power Factor setting for the lead level element.				
PF< Lead TD	0.05 sec	0.05 sec	100 sec	0.01 sec
Time delay setting associated with the lead level element of the under power factor protection.				
PF< Status Lag	Disabled	Disabled, DT		
Enables or disables the lag level element of the under power factor protection.				
Power Fact Lag	0.9	0.1	0.9	0.1
Power Factor setting for the lag level element.				
PF< Lag TD	0.05 sec	0.05 sec	100 sec	0.01 sec
Time delay setting associated with the lag level element of the under power factor protection.				
PF< Drop-of Time	7 sec	0.05 sec	300 sec	0.05 sec
Time delay on drop-off to ensure inhibition during motor starting.				

Table 14: Out of step protection settings

1.2.14 Reverse power

The P241/2/3 relays provides reverse power protection which is used to detect the reverse flow of power due to a synchronous motor feeding a fault. This feature is only enabled when the circuit breaker is closed, therefore it requires a 52 a CB auxiliary contact mapped to an opto input to monitor the breaker status.

Menu text	Default setting	Setting range		Step size
		Min.	Max.	
GROUP 1: REVERSE POWER				
Rev P< Power Set	1 In W	1 In W	120 In W	1 In W
Setting for the reverse power stage.				
Rev P< Time Delay	0.2 sec	0.04 sec	100 sec	0.01 sec
Time delay associated with the reverse power stage.				
Rev P< Drop-of Ti	5 sec	0.05 sec	300 sec	0.05 sec
Time delay on drop-off to ensure inhibition during motor starting.				

Table 15: Reverse power protection settings

1.2.15 Anti-Backspin protection

The P241/2/3 relays provide anti-backspin protection.

Menu text	Default setting	Setting range		Step size
		Min.	Max.	
GROUP 1: ANTI-BACKSPIN				
VRem Antibacks	10 Vn	1 Vn	120 Vn	1 Vn
Setting of the remanent phase-phase voltage element.				
Antibacks Delay	3000 secs	1 secs	7200 secs	1 secs
Time delay setting associated with the remanent voltage anti-backspin protection.				

Table 16: Anti-Backspin protection settings

1.2.16 Field failure protection

The field failure protection included in the P241/2/3 relay provides two impedance based stages of protection and a leading power factor alarm element.

ST

Menu text	Default setting	Setting range		Step size
		Min	Max	
GROUP1: FIELD FAILURE				
FFail Alm Status	Disabled	Disabled, Enabled		
Enables or disables the Field Failure Alarm function.				
FFail Alm Angle	15°	15°	75°	1°
Pick-up setting for field failure alarm angle (leading power factor angle).				
FFail Alm Delay	5 sec	0 sec	100 sec	0.1 sec
Operating time-delay setting of the field failure alarm.				
FFail1 Status	Enabled	Disabled, Enabled		
Enables or disables the first stage field failure protection function.				
FFail1 –Xa1	20/In Ω	0/In Ω	40/In Ω	0.5/In Ω
Negative reactance offset setting of first stage field failure impedance protection.				
FFail1 Xb1	220/In Ω	25/In Ω	325/In Ω	1/In Ω
Diameter setting of circular impedance characteristic of first stage field failure protection.				
FFail1 TimeDelay	5 sec	0 sec	100 sec	0.1 sec
Operating time-delay setting of the field failure first stage protection.				
FFail1 DO Timer	0 s	0 s	10 s	0.1 s
Drop-off time-delay setting of the first stage field failure protection.				
FFail2 Status	Enabled	Disabled, Enabled		
Enables or disables the second stage field failure protection function.				
FFail2 –Xa2	20/In Ω	0/In Ω	40/In Ω	0.5/In Ω
Negative reactance offset setting of second stage field failure impedance protection.				
FFail2 Xb2	110/In Ω	25/In Ω	325/In Ω	1/In Ω
Diameter setting of circular impedance characteristic of second stage field failure protection.				
FFail2 TimeDelay	0 s	0 s	100 s	0.1 s
Operating time-delay setting of the field failure second stage protection.				
FFail2 DO Timer	0 s	0 s	10 s	0.1 s
Drop-off time-delay setting of the second stage field failure protection.				

Table 17: Field failure protection settings

1.2.17 Voltage protection

The undervoltage and overvoltage protection included within the P241/2/3 relay both consist of two independent stages. The Undervoltage protection stage 1 can be set to Inverse Definite Minimum Time (IDMT) and the second stage can be set to Definite Time (DT). This feature is only enabled when the circuit breaker is closed, therefore it requires a 52a CB auxiliary contact mapped to an opto input to monitor the breaker status.

The overvoltage protection stage 1 and stage 2 can be set to Definite Time (DT) only.

Menu text	Default setting	Setting range		Step size
		Min.	Max.	
GROUP 1: VOLT PROTECTION				
UNDERVOLTAGE	Menu Sub-heading			
V<1 Function	Disabled	Disabled DT IDMT		
.Selection of first stage undervoltage element.				
V<1 Voltage Set	93 V	15 V	120 V	1 V
Setting of the first stage undervoltage element.				
V<1 Time Delay	0.5 sec	0.04 sec	7200 sec	0.01 sec
Definite Time (DT) setting for the first stage undervoltage element if V<1 Function is set as DT.				
V<1 TMS	1	0.5	100	0.01
Time Multiplier Setting of first stage undervoltage element if V<1 Function is set as IDMT.				
V<2 Status	Disabled	Disabled/DT		
.Selection of second stage undervoltage element.				
V<2 Voltage Set	60 V	15 V	120 V	1 V
Setting of the second stage undervoltage element.				
V<2 Time Delay	0.25 sec	0.04 sec	100 sec	0.01 sec
Definite Time (DT) setting for the first stage undervoltage element if V<1 Function is set as DT.				
Inhib During St	Disabled	Disabled, Enabled		
Setting to enable or disable the inhibit of undervoltage elements during motor starting.				
GROUP 1: VOLT PROTECTION				
OVERVOLTAGE	Menu Sub-Heading			
V>1 Status	Disabled	Disabled, DT		
Enable or disables the first stage overvoltage element.				
V>1 Voltage Set	165 V	50 V	200 V	1 V
Setting of the first stage overvoltage element.				
V>1 Time Delay	10 sec	0.04 sec	7200 sec	0.01 sec
Definite Time (DT) setting for the first stage overvoltage element.				
V>2 Status	DT	Disabled, DT		
Enable or disables the second stage overvoltage element.				
V>2 Voltage Set	140 V	50 V	200 V	1 V
Setting of the second stage overvoltage element.				
V>2 Time Delay	5 sec	0.04	7200 sec	0.01 sec
Definite Time (DT) setting for the second stage overvoltage element.				

Table 18: Under/Overvoltage protection settings

1.2.18 Underfrequency protection

The P241/2/3 relay includes 2 stages of underfrequency protection to protect synchronous machine against loss of AC supply. Each stage can be selected as Definite Time (DT). This feature is only enabled when the circuit breaker is closed, therefore it requires a 52a CB auxiliary contact mapped to an opto input to monitor the breaker status.

Menu text	Default setting	Setting range		Step size
		Min.	Max.	
GROUP 1: UNDERFREQUENCY				
F<1 Status	Disabled	Disabled, DT		
Enables or disables the first stage underfrequency element.				
F<1 Setting	49 Hz	45 Hz	65 Hz	0.01 Hz
Pick-up setting for the first stage underfrequency element.				
F<1 Time Delay	0.1 sec	0.1 sec	100 sec	0.01 sec
Operating time-delay setting for the definite time first stage underfrequency element.				
F<2 Status	Disabled	Disabled, DT		
Enables or disables the second stage underfrequency element.				
F<2 Setting	48 Hz	45 Hz	65 Hz	0.01 Hz
Pick-up setting for the second stage underfrequency element.				
F<2 Time Delay	0.1 sec	0.1 sec	100 sec	0.01 sec
Operating time-delay setting for the definite time second stage underfrequency element.				

Table 19: Underfrequency protection settings

1.2.19 Resistor temperature device (RTD)

The P241/2/3 relays provide temperature protection from 10 PT100/Ni100/Ni120 resistor temperature devices (RTD). Each RTD has a definite time trip and alarm stage.

Menu text	Default setting	Setting range		Step size
		Min.	Max.	
GROUP 1: RTD PROTECTION				
Select RTD	0000000000	Bit 0 - Select RTD 1 Bit 1 - Select RTD 2 Bit 2 - Select RTD 3 Bit 3 - Select RTD 4 Bit 4 - Select RTD 5 Bit 5 - Select RTD 6 Bit 6 - Select RTD 7 Bit 7 - Select RTD 8 Bit 8 - Select RTD 9 Bit 9 - Select RTD 10		N/A
10 bit setting to enable or disable the 10 RTDs. For each bit 1 = Enabled, 0 = Disabled.				
RTD 1 Alarm Set	80°C	0°C	400°C	1°C
Temperature setting for the RTD 1 alarm element.				
RTD 1 Alarm Dly	0 s	0	100 s	1 s
Operating time delay setting for the RTD 1 alarm element.				
RTD 1 Trip Set	100°C	0°C	400°C	1°C
Temperature setting for the RTD 1 trip element.				
RTD 1 Trip Dly	0 s	0	100 s	1 s
Operating time delay setting for the RTD 1 alarm element.				

Menu text	Default setting	Setting range		Step size
		Min.	Max.	
RTD 2-10 Alarm and Trip Settings are the same as RTD1.				
Ext Temp Influen	Disabled	Disabled, DT		
Enables or disables the adaptation of the thermal replica according to the external ambient temperature measurement.				
Ext Temp RTD	1	1	10	1
RTD which will be used to adapt the thermal replica for the external ambient temperature.				
Ext RTD Back-up	2	1	10	1
Back-up RTD which will be used to adapt the thermal replica for the external ambient temperature.				
RTD Type	PT100	PT100, Ni100, Ni120		
Type of RTD.				
RTD Unit	Degree Celsius	Degree Celsius, Fahrenheit		
Unit of RTD temperature measurement.				

Table 20: RTD protection settings

ST

1.2.20 Circuit breaker fail

This function consists of a two-stage circuit breaker fail function that can be initiated by:

- Current based protection elements
- Non current based protection elements
- External protection elements

For current-based protection, the reset condition is based on undercurrent operation to determine that the CB has opened. For the non-current based protection, the reset criteria may be selected by means of a setting for determining a CB Failure condition.

It is common practice to use low set undercurrent elements in protection relays to indicate that circuit breaker poles have interrupted the fault or load current, as required.

Menu text	Default setting	Setting range		Step size
		Min.	**Max.**	
GROUP 1: CB FAIL				
BREAKER FAIL	Sub-heading			
CB Fail 1 Status	Enabled	Enabled or Disabled		
Enables or disables the first stage of the circuit breaker function.				
CB Fail 1 Timer	0.2 s	0 s	10 s	0.01 s
Circuit breaker fail timer setting for stage 1 for which the initiating condition must be valid.				
CB Fail 2 Status	Disabled	Enabled or Disabled		
Enables or disables the second stage of the circuit breaker function.				
CB Fail 2 Timer	0.4 s	0 s	10 s	0.01 s
Circuit breaker fail timer setting for stage 2 for which the initiating condition must be valid.				
CBF Non I Reset	CB Open & I<	I< Only, CB Open & I<, Prot. Reset & I<		
Setting which determines the elements that will reset the circuit breaker fail time for non current based protection functions (e.g. voltage, frequency) initiating circuit breaker fail conditions.				
CBF Ext Reset	CB Open & I<	I< Only, CB Open & I<, Prot. Reset & I<		
Setting which determines the elements that will reset the circuit breaker fail time for external protection functions initiating circuit breaker fail conditions.				

Menu text	Default setting	Setting range		Step size
		Min.	Max.	
UNDERCURRENT	Sub-heading			
I< Current Set	0.1 In	0.02 In	3.2 In	0.0 1In
Circuit breaker fail phase fault undercurrent setting. This undercurrent element is used to reset the CB failure function initiated from the internal or external protection (Any Trip and Ext Trip signals).				

Table 21: CBF protection settings

1.2.21 Supervision (VTS and CTS)

The VTS feature within the relay operates on detection of negative phase sequence (NPS) voltage without the presence of negative phase sequence current. This gives operation for the loss of one or two-phase voltages. Stability of the VTS function is assured during system fault conditions, by the presence of NPS current. The use of negative sequence quantities ensures correct operation even where three-limb or V connected VT's are used.

Under the loss of all three-phase voltages to the relay, there will be no negative phase sequence quantities present to operate the VTS function. However, under such circumstances, a collapse of the three-phase voltages will occur. If this is detected without a corresponding change in any of the phase current signals (which would be indicative of a fault), then a VTS condition will be raised. In practice, the relay detects the presence of superimposed current signals, which are changes in the current applied to the relay.

If a VT were inadvertently left isolated prior to line energization, incorrect operation of voltage dependent elements could result. The previous VTS element detected three-phase VT failure by absence of all three-phase voltages with no corresponding change in current. On line energization there will, however, be a change in current (as a result of load or line charging current for example). An alternative method of detecting three-phase VT failure is therefore required on line energization.

The absence of measured voltage on all three-phases on line energization can be as a result of 2 conditions. The first is a three-phase VT failure and the second is a close up three-phase fault. The first condition would require blocking of the voltage dependent function and the second would require tripping. To differentiate between these 2 conditions an overcurrent level detector (VTS I> Inhibit) is used which will prevent a VTS block from being issued if it operates. This element should be set in excess of any non-fault based currents on line energization (load, line charging current, transformer inrush current if applicable) but below the level of current produced by a close up three-phase fault. If the line is now closed where a three-phase VT failure is present the overcurrent detector will not operate and a VTS block will be applied. Closing onto a three-phase fault will result in operation of the overcurrent detector and prevent a VTS block being applied.

The CT supervision feature operates on detection of derived zero sequence current, in the absence of corresponding derived zero sequence voltage that would normally accompany it.

The CT supervision can be set to operate from the residual voltage measured at the VNEUTRAL input (VN1 input for P241/2/3) or the residual voltage derived from the three phase-neutral voltage inputs as selected by the 'CTS Vn Input' setting.

There are two stages of CT supervision CTS-1 and CTS-2. CTS-1 supervises the CT inputs to IA, IB, IC which are used by the biased differential protection and all the power, impedance and overcurrent based protection functions. CTS-2 supervises the CT inputs to IA-2, IB-2, IC-2 which are used by the biased or high impedance differential or interturn protection in the P243. The CTS-2 independent enabled/disabled setting is to prevent CTS-2 from giving unnecessary alarms when the Generator Differential is disabled. For interturn faults, some utilities may isolate the faulted winding section and return the generator to service, therefore producing unbalanced phase currents. Under these circumstances the CTS-2 may also need to be disabled or de-sensitized to prevent a false alarm and a false block.

Menu text	Default setting	Setting range		Step size
		Min.	Max.	
SUPERVISION GROUP 1				
VT SUPERVISION	Sub-heading			
VTS I2> Inhibit	0.05 In	0.05 In	0.5 In	0.0 1In
This NPS overcurrent setting is used to inhibit the voltage transformer supervision in the event of a fault occurring on the system with negative sequence current above this setting.				
VTS Time Delay	5 s	1 s	10 s	0.1 s
Operating time-delay setting of the VTS element upon detection of a voltage supervision condition.				
Detect 3 P	Disabled	Enabled or Disabled		N/A
This overcurrent setting is used to inhibit the voltage transformer supervision in the event of a loss of all 3 phase voltages caused by a close up 3 phase fault occurring on the system following closure of the CB to energize the line.				
Threshold 3P	30 V	10 V	70 V	1 V
3 phase under voltage level setting. This setting is used to indicate a close up 3 phase fault or a 3 phase VT failure condition.				
Delta I >	0.1 In	0.1 In	5 In	0.01 In
Delta (superimposed) phase current setting. This setting is used to distinguish between a close up 3 phase fault and a 3 phase VT failure condition under load conditions. For a close up 3 phase fault there will be a loss of 3 phase voltage but there will be a delta change in the measured current. For a 3 phase VT failure where there will a loss of 3 phase voltage but no delta change in the measured current.				
VTS I> Inhibit	10 In	0.1 In	32 In	0.1 In
This overcurrent setting is used to inhibit the voltage transformer supervision in the event of a loss of all 3 phase voltages caused by a close up 3 phase fault occurring on the system following closure of the CB to energize the line.				
CT SUPERVISION	Sub-heading			
CTS1 Status	Disabled	Enabled or Disabled		N/A
Enables or disables the current transformer supervision 1 element.				
CTS1 VN< Inhibit	0.05 Vn	0.01 Vn	0.2 Vn	0.01 Vn
Residual/neutral voltage setting to inhibit the CTS1 element.				
CTS1 IN> Set	0.2 In	0.08 x In	4 x In	0.01 x In
Residual/neutral current setting for a valid current transformer supervision condition for CTS1.				
CTS1 Time Delay	5 s	0 s	10 s	1 s
Operating time-delay setting of CTS1.				
CTS2 settings are the same as CTS1				
To be used only for P243 differential protection scheme.				

Table 22: VTS and CTS protection settings

1.2.22 Current loop inputs and outputs (CLIO)

Four analog or current loop (analog) inputs are provided for transducers with ranges of ~ 0 - 1 mA, 0 - 10 mA, 0 - 20 mA or 4 - 20 mA. The analog inputs can be used for various transducers such as vibration monitors, tachometers and pressure transducers. Associated with each input there are two protection stages, one for alarm and one for trip. Each stage can be individually enabled or disabled and each stage has a definite time delay setting. The Alarm and Trip stages operate when the input value rises above the Alarm/Trip threshold.

Four current loop (analog) outputs are provided with ranges of 0 - 1 mA, 0 - 10 mA, 0 - 20 mA or 4 - 20 mA which can alleviate the need for separate transducers. These may be used to feed standard moving coil ammeters for analog indication of certain measured quantities or into a SCADA using an existing analog RTU.

Menu text	Default setting	Setting range		Step size
		Min.	Max.	
GROUP 1: CLIO INPUTS				
Range 1	Disabled	Disabled, 0 - 1 mA, 0 - 10 mA, 0 - 20 mA, 4 - 20 mA		
Enables or disables the current loop (transducer) input 1 element.				
Unit 1	None	None, A, V, Hz, W, Var, VA, °C, F, %, s		
Current loop 1 input unit type.				
Minimum 1	0	A list of parameters are shown in the table below.		
Current loop input 1 minimum setting. Defines the lower range of the physical or electrical quantity measured by the transducer.				
Maximum 1	0	A list of parameters are shown in the table below.		
Current loop input 1 maximum setting. Defines the upper range of the physical or electrical quantity measured by the transducer.				
Function 1	Disabled	Disabled, Enabled		
Enables or disables the current loop (transducer) input 1 alarm and trip stages.				
Alarm Set 1	0	A list of parameters are shown in the table below.		
Pick-up setting for the current loop input 1 alarm element.				
Alarm Delay 1	0	0	300 s	1 s
Operating time-delay setting of current loop input 1 alarm element.				
Trip Set 1	0	A list of parameters are shown in the table below.		
Pick-up setting for the current loop input 1 trip element.				
Trip Delay 1	0	0	300 s	1 s
Operating mode of the current loop input 1 trip element.				
CLI2/3/4 settings are the same as CLI1				
Drop-of Time	5 sec	0.1 sec	300 sec	0.1 sec
Drop-off time delay of the current loop inputs 1/2/3/4.				
GROUP 1: CLIO OUTPUTS				
Range 1	Disabled	Disabled, 0 - 1 mA, 0 - 10 mA, 0 - 20 mA, 4 - 20 mA		
Current loop 1 output type.				
ANALOG OUTPUT 1	IA Magnitude	A list of parameters are shown in the table below		
This setting defines the measured quantity assigned to current loop output 1.				
Minimum 1	0	Range, step size and unit corresponds to the selected parameter in the table below		
Current loop output 1 minimum setting. Defines the lower range of the measurement.				
Maximum 1	100 A	Range, step size and unit corresponds to the selected parameter in the table below		
Current loop output 1 maximum setting. Defines the upper range of the measurement.				
Analog Output 2/3/4 settings are the same as Analog Output 1 except Analog Output 2/3/4 measurements are VA Magnitude, Frequency and RTD1 Temperature.				

Table 23: Current loop inputs and outputs settings

Analog (Current loop) input units and setting ranges are shown below

Analog input unit	Setting range		Step size
	Min.	Max.	
A	0	100 k	1
V	0	20 k	1
Hz	0	100	1

Analog input unit	Setting range		Step size
W	-1.41 G	1.41 G	1
VAr	-1.41 G	1.41 G	1
VA	0	1.41 G	1
°C	-40	400	1
F	-40	752	1
%	0	150	0.1
s	0	300	0.1
None	-32.5 k	50 k	0.1

Table 24: Current loop inputs units and setting ranges

The CLIO output conversion task runs every 50 ms and the refresh interval for the output measurements is nominally 200 ms.

Current loop output parameters are shown in the following table:

Current loop output parameter	Abbreviation	Units	Range	Step	Default min.	Default max.
Current Magnitude	IA Magnitude IB Magnitude IC Magnitude IN Magnitude	A	0 to 100 k	1	0	100
RMS Phase Currents	IA RMS IB RMS IC RMS IN RMS	A	0 to 100 k	1	0	100
P-N voltage Magnitude	VAN Magnitude VBN Magnitude VCN Magnitude VN Magnitude	V	0 to 20 k	1	0	100
RMS Phase-N Voltages	VAN RMS VBN RMS VCN RMS	V	0 to 20 k	1	0	100
P-P Voltage Magnitude	VAB Magnitude VBC Magnitude VCA Magnitude	V	0 to 20 k	1	0	100
RMS Phase-Phase Voltages	VAB RMS Magnitude VBC RMS Magnitude VCA RMS Magnitude	V	0 to 20 k	1	0	100
Frequency	Frequency	Hz	0 to 100	1	0	100
3 Ph Active Power	Three-Phase Watts	W	-10 M to 30 M	1	0	100
3 Ph Reactive Power	Three-Phase Vars	Var	-10 M to 30 M	1	0	100
3 Ph Apparent Power	Three-Phase VA	VA	-10 M to 30 M	1	0	100
3 Ph Power Factor	3Ph Power Factor	-	-1 to 1	0.01	0	1

Current loop output parameter	Abbreviation	Units	Range	Step	Default min.	Default max.
RTD Temperatures	RTD 1 RTD 2 RTD 3 RTD 4 RTD 5 RTD 6 RTD 7 RTD 8 RTD 9 RTD 10	°C	-40°C to 400°C	1°C	0°C	100°C
Nb of hottest RTD	Nb Hottest RTD		1-10	1	1	10
Thermal State	Thermal State	%	0-150	0.1	0	100
Time to Thermal Trip	Time to Thermal Trip	Sec	0-300	0.1	0	100
Time to next start	Time to Next Start	Sec	0-300	0.1	0	100

Table 25: Current loop outputs units and setting range

Note 1: The current loop (Analog) outputs are refreshed every 200 ms.

Note 2: The polarity of Watts, Vars and power factor is affected by the Measurements Mode setting.

Note 3: These settings are for nominal 1 A and 100/120 V versions only. For other nominal versions they need to be multiplied accordingly.

Note 4: All current loop (Analog) output measurements are in primary values.

1.2.23 Input labels

Menu text	Default setting	Setting range	Step size
GROUP 1: INPUT LABELS			
Opto Input 1	Opto 1	16 Character Text	
Text label to describe each individual opto input. This text will be displayed in the programmable scheme logic and event record description of the opto input.			
Opto Input 2 to 16	Opto 2 to 16	16 Character Text	
Text label to describe each individual opto input. This text will be displayed in the programmable scheme logic and event record description of the opto input.			

Table 26: Input labels settings

1.2.24 Output labels

Menu text	Default setting	Setting range	Step size
GROUP 1: OUTPUT LABELS			
Relay 1	Relay 1	16 Character Text	
Text label to describe each individual relay output contact. This text will be displayed in the programmable scheme logic and event record description of the relay output contact.			
Relay 2 to 16	Relay 2 to Relay 16	16 Character Text	
Text label to describe each individual relay output contact. This text will be displayed in the programmable scheme logic and event record description of the relay output contact.			

Table 27: Output labels settings

1.2.25 RTD labels

Menu text	Default setting	Setting range	Step size
GROUP 1: RTD LABELS			
RTD 1	RTD 1	16 Character Text	
Text label to describe each individual RTD. This text will be displayed in the Measurements 3 menu and fault records for the description of the RTDs.			
RTD 2 to 10	RTD 2 to RTD 10	16 Character Text	
Text label to describe each individual RTD. This text will be displayed in the Measurements 3 menu and fault records for the description of the RTDs.			

Table 28: RTD labels settings

1.2.26 Analog Input labels

Menu text	Default setting	Setting range	Step size
GROUP 1: CLIO LABELS			
CLIO Input 1	Analog Input 1	16 Character Text	
Text label to describe each individual current loop/analogue input. This text will be displayed in the Measurements 3 menu and fault records for the description of the current loop/analogue inputs.			
CLIO Input 2 to 4	Analog Input 2 to 4	16 Character Text	
Text label to describe each individual current loop/analogue input. This text will be displayed in the Measurements 3 menu and fault records for the description of the current loop/analogue inputs.			

Table 29: Current loop analog input label settings

ST

1.3 Control and support settings

The control and support settings are part of the main menu and are used to configure the relays global configuration. It includes submenu settings as below which are discussed in more detail below:

- Relay function configuration settings
- Open/close circuit breaker
- CT & VT ratio settings
- Reset LEDs
- Active protection setting group
- Password & language settings
- Circuit breaker control & monitoring settings
- Communications settings
- Measurement settings
- Event & fault record settings
- User interface settings
- Commissioning settings

1.3.1 System data

This menu provides information for the device and general status of the relay.

Menu text	Default setting	Setting range		Step size
		Min.	Max.	
SYSTEM DATA				
Language	English	English, Francais, Deutsch, Espanol, Chinese & Russian		N/A
The default language used by the device. Selectable as English, French, German, Spanish.				

Menu text	Default setting	Setting range		Step size
		Min.	Max.	
Password	****			
Device password for level 1 or 2. If password level 1 is input then the access level is set as 1 and if password level 2 is input then the access level is set as 2.				
Description	MiCOM			
16 character relay description. Can be edited.				
Plant Reference	SE (Schneider Electric)			
Plant description. Can be edited.				
Model Number	P241??????0570J P242??????0570K P243??????0570K			
Relay model number.				
Serial Number	149188B			
Relay serial number.				
Frequency	50 Hz	50 Hz	60 Hz	10 Hz
Relay set frequency. Settable as 50 or 60 Hz.				
Comms. Level				
Displays the conformance of the relay to the Courier Level 2 comms.				
Relay Address				
Sets the first rear port relay address.				
Plant Status	0000000000000000			
Displays the circuit breaker plant status for up to 8 circuit breakers. The P24x relay supports only a single circuit breaker configuration.				
Control Status	0000000000000000			
Not used.				
Active Group	1			
Displays the active settings group.				
CB Trip/Close	No Operation	No Operation, Trip, Close		
Manually trips/closes the relay.				
Software Ref. 1				
Displays the relay software version including protocol and relay model. Software Ref.				
Opto I/P Status	0000000000000000			
This menu cell displays the status of the relay's opto-isolated inputs as a binary string, a **1** indicating an energized opto-isolated input and a **0** a de-energized one.				
Relay O/P Status	0000001000000000			
This menu cell displays the status of the relay's output contacts as a binary string, a **1** indicating an operated state and **0** a non-operated state.				
Alarm Status 1	00000000000000000000000000000000			
This menu cell displays the status of the first 32 alarms as a binary string, a **1** indicating an ON state and **0** an OFF state. Includes fixed and user settable alarms. See Data Type G96 in Relay Menu Database document, *P24x/EN/MD* for details.				
Alarm Status 2	00000000000000000000000000000000			
This menu cell displays the status of the second 32 alarms as a binary string, a **1** indicating an ON state and **0** an OFF state. See Data Type G111 in the Relay Menu Database document, *P24x/EN/MD* for details.				
Alarm Status 3	00000000000000000000000000000000			
This menu cell displays the status of the third 32 alarms as a binary string, a **1** indicating an ON state and **0** an OFF state. Assigned specifically for platform alarms. See Data Type G303 in the Relay Menu Database document, *P24x/EN/MD* for details.				
Access Level	2			
Access Level. Read only. The table below describes the password control.				

ST

Menu text	Default setting	Setting range		Step size
		Min.	Max.	

Set the "Password Control" cell to	The "Access Level" cell displays	Operations	Type of Password required
0	0	**Read** access to all settings, alarms, event records and fault records	None
		Execute Control Commands, e.g. circuit breaker open/close. Reset of fault and alarm conditions. Reset LEDs. Clearing of event and fault records.	Level 1 Password
		Edit all other settings	Level 2 Password
1	1	**Read** access to all settings, alarms, event records and fault records	None
		Execute Control Commands, e.g. circuit breaker open/close. Reset of fault and alarm conditions. Reset LEDs. Clearing of event and fault records.	None
		Edit all other settings	Level 2 Password
2 (Default)	2(Default)	**Read** access to all settings, alarms, event records and fault records	None
		Execute Control Commands, e.g. circuit breaker open/close. Reset of fault and alarm conditions. Reset LEDs. Clearing of event and fault records.	None
		Edit all other settings	**None**

Password Control	2	0	2	1
Sets the menu access level for the relay. This setting can only be changed when level 2 access is enabled.				
Password Level 1	****			
Password level 1 setting (4 characters).				
Password Level 2	****			
Password level 2 setting (4 characters).				

Table 30: System data

1.3.2 View records

This menu provides information on fault and maintenance records. The relay will record the last 5 fault records and the last 10 maintenance records.

Menu text	Default setting	Setting range		Step size
		Min.	Max.	
VIEW RECORDS				
Select Event	0	0	249	
Setting range from 0 to 249. This selects the required event record from the possible 250 that may be stored. A value of 0 corresponds to the latest event and so on.				
Event Type	(From record)	Latched alarm active, Latched alarm inactive, Self reset alarm active, Self reset alarm inactive, Relay contact event, Opto-isolated input event, Protection event, General event, Fault record event, Maintenance record event		
Indicates the type of event.				
Time and Date	Data			
Time & Date Stamp for the event given by the internal Real Time Clock.				

Menu text	Default setting	Setting range		Step size
		Min.	Max.	
Event text	Data.			
Up to 32 Character description of the Event. See event sheet in the Relay Menu Database document, P24x/EN/MD or the Measurements and Recording chapter, *P24x/EN/MR* for details.				
Event Value	Data.			
32 bit binary string indicating ON or OFF (1 or 0) status of relay contact or opto input or alarm or protection event depending on event type. Unsigned integer is used for maintenance records. See event sheet in the Relay Menu Database document, *P24x/EN/MD* or the Measurements and Recording chapter, *P24x/EN/MR* for details.				
Select Fault	0	0	4	1
Setting range from 0 to 4. This selects the required fault record from the possible 5 that may be stored. A value of 0 corresponds to the latest fault and so on.				
Start elements	00000000000000000000000000000000			
32 bit binary string gives status of first 32 start signals. See Data Type G84 in the Relay Menu Database document, *P24x/EN/MD* for details.				
Trip elements 1	00000000000000000000000000000000			
32 bit binary string gives status of first 32 trip signals. See Data Type G85 in the Relay Menu Database document, *P24x/EN/MD* for details.				
Trip elements 2	00000000000000000000000000000000			
32 bit binary string gives status of second 32 trip signals. See Data Type G86 in the Relay Menu Database document, *P24x/EN/MD* for details.				
Faulted Phase	00000000			
Displays the faulted phase as a binary string, bits 0 – 8 = Start A/B/C/N Trip A/B/C/N.				
Fault Alarms	00000000000000000000000000000000			
This menu cell displays the status of the 32 fault alarms as a binary string, a **1** indicating an ON state and **0** an OFF state. See Data Type G87 in the Relay Menu Database document, *P24x/EN/MD* for details.				
Active Group				
Active setting group 1-2.				
Fault Time	Data.			
Fault Time and Date				
System Frequency	Data			
System frequency.				
The following cells provide measurement information of the fault : IA, IB, IC, VAB, VBC, VCA, VAN, IN Derived, IN, Thermal State, I2, 3Ph Power Factor, IN>PO, VN, 3-Phase Active Power, RTD 1-10 Temperature, IA2, IB2, IC2, IA/IB/IC Differential, IA/IB/IC Bias, Analog Input 1-4.				
Select Report	0	0	4	1
Setting range from 0 to 4. This selects the required maintenance report from the possible 5 that may be stored. A value of 0 corresponds to the latest report and so on.				
Report Text	Data.			
Up to 32 Character description of the occurrence. See the Measurements and Recording chapter, *P24x/EN/MR* for details.				
Maintenance Type	Data.			
Maintenance record fault type. This will be a number defining the fault type.				
Maintenance Data	Data.			
Error code associated with the failure found by the self monitoring. The Maint Type and Data cells are numbers representative of the occurrence. They form a specific error code which should be quoted in any related correspondence to Report Data.				
Reset Indication	No	No/Yes		N/A
Resets latched IEDs and latched relay contacts provided the relevant protection element has reset.				

Table 31: View records settings

1.3.3 Measurements 1

This menu provides measurement information.

Menu text	Default setting	Setting range		Step size
		Min.	Max.	
MEASUREMENTS 1				
IA Magnitude	Data.			
IA Phase Angle	Data.			
IB Magnitude	Data.			
IB Phase Angle	Data			
IC Magnitude	Data.			
IC Phase Angle	Data.			
IN Derived Mag	Data.			
IN Derived Angle	Data.			
I SEF Magnitude	Data.			
I SEF Angle	Data.			
I1 Magnitude	Data. Positive sequence current.			
I2 Magnitude	Data. Negative sequence current.			
I0 Magnitude	Data. Zero sequence current.			
IA RMS	Data.			
IB RMS	Data.			
IC RMS	Data.			
IN RMS	Data			
VAB Magnitude	Data.			
VAB Phase Angle	Data.			
VBC Magnitude	Data.			
VBC Phase Angle	Data.			
VCA Magnitude	Data.			
VCA Phase Angle	Data.			
VAN Magnitude	Data. If Anti-backspin function is disabled			
VAN Phase Angle	Data. If Anti-backspin function is disabled			
VBN Magnitude	Data. If Anti-backspin function is disabled			
VBN Phase Angle	Data. If Anti-backspin function is disabled			
VCN Magnitude	Data. If Anti-backspin function is disabled			
VCN Phase Angle	Data. If Anti-backspin function is disabled			
VN Magnitude	Data. If Anti-backspin function is disabled			
VN Phase Angle	Data. If Anti-backspin function is disabled			
Vr Antibacks Mag	Data. If Anti-backspin function is enabled			
V1 Magnitude	Data. Positive sequence voltage.			
V2 Magnitude	Data. Negative sequence voltage.			
VA RMS Magnitude	Data. If Anti-backspin function is disabled			
VB RMS Magnitude	Data. If Anti-backspin function is disabled			
VC RMS Magnitude	Data. If Anti-backspin function is disabled			
VAB RMS Magnitude	Data. If Anti-backspin function is disabled			
VBC RMS Magnitude	Data.			
VCA RMS Magnitude	Data.			
Frequency	Data.			
Ratio I2/I1	Data			
IA2 Magnitude	Data.			

Menu text	Default setting	Setting range		Step size
		Min.	Max.	
IA2 Phase Angle	Data			
IB2 Magnitude	Data.			
IB2 Phase Angle	Data.			
IC2 Magnitude	Data.			
IC2 Phase Angle	Data			
IA Differential	Data.			
IB Differential	Data			
IC Differential	Data.			
IA Bias	Data.			
IB Bias	Data.			
IC Bias	Data.			

Table 32: Measurement 1 menu

1.3.4 Measurements 2

This menu provides measurement information.

Menu text	Default setting	Setting range		Step size
		Min.	Max.	
MEASUREMENTS 2				
3 Phase Watts	Data.			
3 Phase VARs	Data.			
3 Phase VA	Data.			
Zero Seq power	Data.			
3Ph Power Factor	Data.			
3Ph WHours Fwd	Data.			
3Ph WHours Rev	Data.			
3Ph VArHours Fwd	Data.			
3Ph VArHours Rev	Data.			
Resest Energies	No	Yes/No		
3Ph W Fix Demand	Data.			
3Ph VAr Fix Demand	Data.			
3Ph W Peak Dem	Data.			
3Ph VAr Peak Dem	Data.			
Reset Demand	No	No, Yes		
Reset demand measurements command. Can be used to reset the fixed and peak demand value measurements to 0.				
3 Ph I Maximum	Data			
3Ph V Maximum	Data			
Reset Max I/V	No	No, Yes		

Table 33: Measurement 2 menu

1.3.5 Measurements 3 (product specific measurements)

This menu provides measurement information.

Menu text	Default setting	Setting range		Step size
		Min.	Max.	
MEASUREMENTS 3				
Thermal Load	Data: - If Thermal Function is enabled			
Thermal State	Data: - If Thermal Function is enabled			
Time to Th Trip	Data: - If Thermal Function is enabled			
Reset Th State	No	No/Yes		N/A
RTD#1 Temperature	Data: - If RTD#1 is enabled			
RTD#2-#10 Temperature	Data: - If RTD#2- #10 is enabled			
Nb Hot St. Allow	Data			
Nb Cold St Allow	Data			
Time to Next St	Data			
Emergency Rest	Data			
Last Start Time	Data: - If Function Prolonged Starts is enabled			
Last St Current	Data: - If Function Prolonged Starts is enabled			
Nb of starts	Data: - If Function Prolonged Starts is enabled			
Reset Nb of St	No	No/Yes		N/A
Nb Emergency Rst	Data: - If Function Prolonged Starts is enabled			
Reset Nb Em Rst	No	No/Yes		N/A
Nb Reaccelarat	Data: - If Function Reacceleration is enabled			
Reset Nb Reacc	No	No/Yes		N/A
Reset number of reacceleration command. Resets state to 0				
Motor Run Time	Data.			
This menu cell displays the accumulated motor run time. Motor run time is initiated each time the switching device is closed and remains closed.				
Reset Motor Run T	No	No/Yes		N/A
Reset number of motor running hours recorded command. Resets state to 0.				
RTD Open Cct	0000000000			
This menu cell displays the status of the ten RTDs as a binary string, 0 = No Open Circuit, 1 = Open Circuit. The Open Cct alarms are latched.				
RTD Short Cct	0000000000			
This menu cell displays the status of the ten RTDs as a binary string, 0 = No Short Circuit, 1 = Short Circuit. The Short Cct alarms are latched.				
RTD Data Error	0000000000			
This menu cell displays the status of the ten RTDs as a binary string, 0 = No Data Error, 1 = Data Error. The Data Error alarms are latched.				
Reset RTD flags	No	No, Yes		N/A
Reset RTD alarms command. Resets latched RTD Open Cct, Short Cct, Data Error alarms.				
Nb Hottest RTD	Data.			
Hottest RTD Temp	Data.			
Reset Max RTD Temp	No	No, Yes		N/A
Reset hottest RTD measurement command. Resets thermal state to 0.				
Analog Input 1	Data. Analog (Current loop/transducer) input 1.			
Analog Input 2	Data. Analog (Current loop/transducer) input 2.			
Analog Input 3	Data. Analog (Current loop/transducer) input 3.			
Analog Input 4	Data. Analog (Current loop/transducer) input 4.			

Table 34: Measurement 3 menu

1.3.6 Measurements 4 (product specific measurements)

This menu provides measurement information.

Menu text	Default setting	Setting range		Step size
		Min.	Max.	
MEASUREMENTS 4				
Nb Control Trips	Data: - If CB control is enabled.			
Nb Thermal Trip	Data. - If Thermal Function is enabled			
Nb Trip I> 1	Data: - If Short Circuit Protection is Enabled			
Nb Trip I> 2	Data: - If Short Circuit Protection is Enabled			
Nb Trip ISEF>1	Data: - If Earth Fault Protection is Enabled			
Nb Trip ISEF>2	Data: - If Earth Fault Protection is Enabled			
Nb Trip IN>1	Data: - If Derived Earth Fault Protection is Enabled			
Nb Trip IN>2	Data: - If Derived Earth Fault Protection is Enabled			
Nb Trip I2>1	Data: - If NPS protection is enabled			
Nb Trip I2>2	Data: - If NPS protection is enabled			
Nb Trip PO>	Data: - If Derived Earth Fault Wattmetric Protection is Enabled			
Nb Trip V<1	Data: - If Undervoltage Protection is enabled			
Nb Trip V<2	Data: - If Undervoltage Protection is enabled			
Nb Trip F<1	Data: - If underfrequency Protection is enabled			
Nb Trip F<2	Data: - If Underfrequency Protection is enabled			
Nb Trip P<1	Data: - If Loss of Load Protection is enabled			
Nb Trip P<2	Data: - If Loss of Load Protection is enabled			
Nb Trip PF< Lead	Data			
Nb Trip PF< Lag	Data			
Nb Trip Rev P	Data: - If Reverse Power Protection is enabled			
Nb Trip V>1	Data: - If overvoltage Protection is enabled			
Nb Trip V>2	Data: - If overvoltage protection is enabled			
Nb Trip NVD VN>1	Data: - If NVD Protection is enabled			
Nb Trip NVD VN>2	Data: - If NVD Protection is enabled			
Nb Prolong St	Data: - If Prolonged Start Status enabled			
Nb Lock Rot-sta	Data: - If Locked Rotor Start<Stall and prolonged start status enabled			
Nb Lock Rot-run	Data			
Nb Trip RTD#1	Data: - If RTD#1 is enabled			
Nb Trip RTD#2-10	Data: - If RTD#2 - #10 is enabled			
Nb Trip Diff	Data: - If Differential Protection is enabled			
Nb A Input 1 Trip	Data: - If analogue input 1 enabled			
Nb A Input 2 Trip	Data: - If analogue input 2 enabled			
Nb A Input 3 Trip	Data: - If analogue input 3 enabled			
Nb A Input 4 Trip	Data: - If analogue input 4 enabled			
Nb FFail1 Trip	Data If Field Failure 1 function enabled			
Nb FFail2 Trip	Data If Field Failure 2 function enabled			
Nb Trip I> 3	Data if I>3 enabled			
Nb Trip I> 4	Data if I>4 enabled			
Reset Trip Stat	No	No, Yes		
Reset Trip counter statistics command. Resets all counters to 0				

Table 35: Measurement 4 menu

1.3.7 Circuit breaker condition

The P241/2/3 relays include measurements to monitor the CB condition.

Menu text	Default setting	Setting range		Step size
		Min.	Max.	
CB CONDITION				
CB Operations	Data. Number of CB trip operations.			
Total IA Broken	Data. Accumulated broken current for A phase protection trip.			
Total IB Broken	Data. Accumulated broken current for B phase protection trip.			
Total IC Broken	Data. Accumulated broken current for C phase protection trip.			
CB Operate Time	Data. CB operating time = time from protection trip to undercurrent elements indicating the CB is open.			
Reset CB Data	No	No, Yes		N/A
Reset CB Data command. Resets CB Operations and Total IA/IB/IC broken current counters to 0.				

Table 36: Circuit breaker condition menu

1.3.8 Circuit breaker control

The P241/2/3 relays include settings to reset CB condition monitoring lockout alarms and set the type of CB auxiliary contacts that will be used to indicate the CB position.

Menu text	Default setting	Setting range		Step size
		Min.	Max.	
CB CONTROL				
CB Control by	Disabled	Disabled, Local, Remote, Local+Remote, Opto, Opto+Local, Opto+Remote, Opto+Local+Remote		
Selects which method the CB can be controlled by.				
Close Pulse Time	0.5 sec	0.1 sec	5 sec	0.1 sec
Defines the duration of the close pulse.				
Trip Pulse Time	0.5 sec	0.1 sec	5 sec	0.1 sec
Defines the duration of the trip pulse.				
Man Close Delay	1 s	0 sec	60 sec	1 sec
This defines the delay time before the close pulse is executed.				

Table 37: Circuit breaker control settings

1.3.9 Date and time

Displays the date and time as well as the battery condition.

Menu text	Default setting	Setting range		Step size
		Min.	Max.	
DATE AND TIME				
Date/Time	Data			
Displays the relay's current date and time.				
IRIG-B Sync.	Disabled	Disabled or Enabled		N/A
Enables or disables the IRIG-B time synchronization.				
IRIG-B Status	Data	Card not fitted/Card failed/ Signal healthy/No signal		N/A
Displays the status of IRIG-B.				
Battery Status	Dead or Healthy			
Displays whether the battery is healthy or not.				

ST

Menu text	Default setting	Setting range		Step size
		Min.	Max.	
Battery Alarm	Enabled	Disabled or Enabled		N/A
Enables or disables battery alarm. The battery alarm needs to be disabled when a battery is removed or not used.				

Table 38: Date and time menu

1.3.10 CT and VT ratios

Menu text	Default setting	Setting range		Step size
		Min.	Max.	
CT AND VT RATIOS				
Main VT Primary	110.0 V	100	1000 kV	1
Main voltage transformer input, primary voltage setting.				
Main VT Sec'y	110.0 V	80	140	1
Main transformer input, secondary voltage setting.				
Phase CT Primary	1.000 A	1	30 k	1
Phase current transformer input, primary current rating setting.				
Phase CT Sec'y	1.000 A	1	5	4
Phase current transformer input, secondary current rating setting.				
SEF CT Primary	1.000 A	1	30 k	1
Sensitive current transformer input, primary current rating setting.				
SEF CT Secondary	1.000 A	1	5	4
Sensitive current transformer input, secondary current rating setting.				
VT Connecting Mode	3 VT	3 VT 2 VT + Residual 2 VT + Vremanent		
VT connection setting cell				
NVD VT Primary	110 V	100 V	1000 kV	1 V
NVD voltage transformer input, primary voltage setting				
NVD VT Secondary	110 V	80 V	140 V	1 V
NVD voltage transformer input, secondary voltage setting				

Table 39: CT and VT ratio settings

1.3.11 Record control

It is possible to disable the reporting of events from all interfaces that support setting changes. The settings that control the reporting of various types of events are in the Record Control column. The effect of setting each to disabled is as follows:

Menu text	Default setting	Available settings
RECORD CONTROL		
Clear Events	No	No or Yes
Selecting Yes will cause the existing event log to be cleared and an event will be generated indicating that the events have been erased.		
Clear Faults	No	No or Yes
Selecting Yes will cause the existing fault records to be erased from the relay.		
Clear Test Log	No	No or Yes
Selecting Yes will cause the existing maintenance records to be erased from the relay.		
Alarm Event	No	No/Yes
Disabling this setting means that no event will be generated for all alarms.		

Menu text	Default setting	Available settings
RelayO/P Event	No	No/Yes
Disabling this setting means that no event will be generated for any change in relay output contact state.		
Opto Input Event	No	No/Yes
Disabling this setting means that no event will be generated for any change in logic input state.		
General Event	No	No/Yes
Disabling this setting means that no General Events will be generated. See event record sheet in the menu database chapter, P24x/EN MD for list of general events.		
Fault Rec Event	No	No/Yes
Disabling this setting means that no event will be generated for any fault that produces a fault record.		
Maint. Rec Event	No	No/Yes
Disabling this setting means that no event will be generated for any maintenance records.		
Protection Event	No	No/Yes
Disabling this setting means that no event will be generated for any operation of the protection elements.		
DDB 31 - 0	11111111111111111111111111111111	
32 bit setting to enable or disable the event recording for DDBs 0-31. For each bit 1 = event recording Enabled, 0 = event recording Disabled.		
DDB 1022 - 992	11111111111111111111111111111111	
32 bit setting to enable or disable the event recording for DDBs 1022 – 992. For each bit 1 = event recording Enabled, 0 = event recording Disabled. There are similar cells showing 32 bit binary strings for all DDBs from 0 – 1022. The first and last 32 bit binary strings only are shown here.		
Clear Dist Recs	No	No/Yes
Clears all stored disturbance records from the relay.		

Table 40: Record control menu

1.3.12 Disturbance recorder settings

The disturbance recorder settings include the record duration and trigger position, selection of analog and digital signals to record, and the signal sources that trigger the recording.

Menu text	Default setting	Setting range		Step size
		Min.	Max.	
DISTURB RECORDER				
Duration	1.5 s	0.1 s	10.5 s	0.01 s
Overall recording time setting.				
Trigger Position	30%	0	100%	0.1%
Trigger point setting as a percentage of the duration. For example, the default settings show that the overall recording time is set to 1.5 s with the trigger point being at 33.3% of this, giving 0.5 s pre-fault and 1s post fault recording times.				
Trigger Mode	Single	Single or Extended		
If set to single mode, if a further trigger occurs whilst a recording is taking place, the recorder will ignore the trigger. However, if this has been set to "Extended", the post trigger timer will be reset to zero, thereby extending the recording time.				
Analog. Channel 1	VAN	VA, VB, VC, IA, IB, IC, IN, IA-2, IB-2, IC-2, VAB, VBC, VN, VRM		
Selects any available analog input to be assigned to this channel.				
Analog. Channel 2	VBN	As above		
Analog. Channel 3	VCN	As above		
Analog. Channel 4	IA	As above		
Analog. Channel 5	IB	As above		
Analog. Channel 6	IC	As above		
Analog. Channel 7	IN	As above		

ST

Menu text	Default setting	Setting range		Step size
		Min.	Max.	
Analog. Channel 8	IN	As above		
Digital Input 1 to 32	Relays 1 to 12 and Opto's 1 to 12	Any of 16 O/P Contacts or Any of 16 Opto Inputs or Internal Digital Signals		
The digital channels may be mapped to any of the opto isolated inputs or output contacts, in addition to a number of internal relay digital signals, such as protection starts, LEDs etc.				
Input 1 to 32 Trigger	No Trigger except Dedicated Trip Relay O/P's which are set to Trigger Edge -/+	No Trigger, Trigger Edge -/+, Trigger Edge +/-		
Any of the digital channels may be selected to trigger the disturbance recorder on either a low to high (-/+) or a high to low (+/-) transition.				

Table 41: Disturbance record settings

1.3.13 Measurement setup

ST

Menu text	Default settings	Available settings	
MEASURE'T SETUP			
Default Display	Description	3Ph + N Current/3Ph Voltage/Power/Date and Time/Description/Plant Reference/Frequency/Thermal State	
This setting can be used to select the default display from a range of options. **Note:** It is also possible to view the other default displays whilst at the default level using the ⟨ and ⟩ keys. However once the 15 minute timeout elapses the default display will revert to that selected by this setting.			
Local Values	Primary	Primary/Secondary	
This setting controls whether measured values using the front panel user interface and the front courier port are displayed as primary or secondary quantities.			
Remote Values	Primary	Primary/Secondary	
This setting controls whether measured values using the rear communication port are displayed as primary or secondary quantities.			
Measurement Ref.	VA	VA/VB/VC/IA/IB/IC	
Using this setting the phase reference for all angular measurements by the relay can be selected.			
Demand Interval	30 minutes	1 to 99 minutes step 1 minute	
This setting defines the length of the fixed demand window.			
Alarm Fix Dem	Invisible	Invisible/Visible	
Sets the Alarm Fix Demand Status menu visible in the relay settings.			
3Ph W Thresh	50 In Wh	1 In Wh	120 In Wh
3 phase watt alarm setting.			
3Ph VAr Thresh	50 In VArh	1 In VArh	120 In VArh
3 phase VArs alarm setting.			
Alarm Energies	Invisible	Invisible/Visible	
Sets the Alarm Energies Status menu visible in the relay settings.			
W Fwd Thresh	50 In Wh	1 In Wh	1000 In Wh
3 phase Watt Hour Forward alarm setting.			
W Rev Thresh	50 In Wh	1 In Wh	1000 In Wh
3 phase Watt Hour Reverse alarm setting.			
VAr Fwd Thresh	50 In VArh	1 In VArh	1000 In VArh
3 phase VAr Hour Forward alarm setting.			
VAr Rev Thresh	50 In VArh	1 In VArh	1000 In VArh
3 phase VAr Hour Reverse alarm setting.			

Menu text	Default settings	Available settings	
MEASURE'T SETUP			
Motor Hour Run > 1	Disabled	Disabled/Enabled	
Enables or disables the first stage Hour Run Meter element.			
Motor Hour Run > 1	500 hours	1 Hour	9999 Hours
Hour Run Meter stage 1 setting.			
Motor Hour Run > 2	Disabled	Disabled/Enabled	
Enables or disables the second stage Hour Run Meter element.			
Motor Hour Run > 2	500 Hours	1 Hour	9999 Hours
Hour Run Meter stage 2 setting.			
Remote 2 Values	Primary	Primary/Secondary	
This setting controls whether measured values using the second rear communication port are displayed as primary or secondary quantities.			

Table 42: Measurement setup settings

1.3.14 Communications

The communications settings apply to the rear communications ports only and will depend upon the particular protocol being used. Further details are given in the SCADA Communications chapter (*P24x/EN/SC*).

ST

1.3.14.1 Communications settings for courier protocol

Menu text	Default setting	Setting range		Step size
		Min.	Max.	
COMMUNICATIONS				
RP1 Protocol	Courier			
Indicates the communications protocol that will be used on the rear communications port.				
RP1 Address	255	0	255	1
This cell sets the unique address for the relay such that only one relay is accessed by master station software.				
RP1 Inactivity Timer	10 min	1 min	30 min	1 min
This cell controls how long the relay will wait without receiving any messages on the rear port before it reverts to its default state, including resetting any password access that was enabled.				
RP1 Physical Link	RS485	RS485 or Fiber Optic		
This cell defines whether an electrical EIA(RS)485, fiber optic or KBus connection is being used for communication between the master station and relay. If 'Fiber Optic' is selected, the optional fiber optic communications board will be required.				
RP1 Card Status	KBus OK, EIA485 OK, Fiber Optic OK			
First rear communication port 1 status				
RP1 Port Config.	Kbus	Kbus, EAI(RS)485		
This cell defines whether an electrical KBus or EIA(RS)485 is being used for communication between the master station and relay.				
RP1 Comms Mode	IEC 60870 FT1.2	IEC 60870 FT1.2, 10Bit		
The choice is either IEC 60870 FT1.2 for normal operation with 11-bit modems, or 10-bit no parity.				
RP1 Baud Rate	19200 bits/s	9600 bits/s, 19200 bits/s or 38400 bits/s		
This cell controls the communication speed between relay and master station. It is important that both relay and master station are set at the same speed setting.				

Table 43: Communication settings for courier protocol

1.3.14.2 Communications settings for MODBUS protocol

Menu text	Default setting	Setting range		Step size
		Min.	Max.	
COMMUNICATIONS				
RP1 Protocol	MODBUS			
Indicates the communications protocol that will be used on the rear communications port.				
RP1 Address	1	1	247	1
This cell sets the unique address for the relay such that only one relay is accessed by master station software.				
RP1 Inactiv Timer	10 mins.	1 min.	30 mins.	1 min.
This cell controls how long the relay will wait without receiving any messages on the rear port before it reverts to its default state, including resetting any password access that was enabled.				
RP1 Baud Rate	19200 bits/s	9600 bits/s, 19200 bits/s or 38400 bits/s		
This cell controls the communication speed between relay and master station. It is important that both relay and master station are set at the same speed setting.				
RP1 Parity	None	Odd, Even or None		
This cell controls the parity format used in the data frames. It is important that both relay and master station are set with the same parity setting.				
RP1 Physical Link	RS485	RS485 or Fiber Optic		
This cell defines whether an electrical EIA(RS) 485 or fiber optic connection is being used for communication between the master station and relay. If **Fiber Optic** is selected, the optional fiber optic communications board will be required.				
MODBUS IEC Time	Standard IEC	Standard IEC or Reverse		
When **Standard IEC** is selected the time format complies with IEC 60870-5-4 requirements such that byte 1 of the information is transmitted first, followed by bytes 2 through to 7. If **Reverse** is selected the transmission of information is reversed.				

Table 44: Communication settings for MODBUS protocol

1.3.14.3 Communications settings for IEC 60870-5-103 protocol

Menu text	Default setting	Setting range		Step size
		Min.	Max.	
COMMUNICATIONS				
RP1 Protocol	IEC 60870-5-103			
Indicates the communications protocol that will be used on the rear communications port.				
RP1 Address	1	0	254	1
This cell sets the unique address for the relay such that only one relay is accessed by master station software.				
RP1 Inactiv Timer	15 mins.	1 min.	30 mins.	1 min.
This cell controls how long the relay will wait without receiving any messages on the rear port before it reverts to its default state, including resetting any password access that was enabled.				
RP1 Baud Rate	19200 bits/s	9600 bits/s or 19200 bits/s		
This cell controls the communication speed between relay and master station. It is important that both relay and master station are set at the same speed setting.				
RP1 Measure't Period	15 s	1 s	60 s	1 s
This cell controls the time interval that the relay will use between sending measurement data to the master station.				
RP1 Physical Link	RS485	RS485 or Fiber Optic		
This cell defines whether an electrical EIA(RS) 485 or fiber optic connection is being used for communication between the master station and relay. If **Fiber Optic** is selected, the optional fiber optic communications board will be required.				

ST

Menu text	Default setting	Setting range		Step size
		Min.	Max.	
RP1 CS103 Blocking	Disabled	Disabled, Monitor Blocking or Command Blocking		
There are three settings associated with this cell: Disabled - No blocking selected. Monitor Blocking - When the monitor blocking DDB Signal is active high, either by energizing an opto input or control input, reading of the status information and disturbance records is not permitted. When in this mode the relay returns a "termination of general interrogation" message to the master station. Command Blocking - When the command blocking DDB signal is active high, either by energizing an opto input or control input, all remote commands will be ignored (i.e. CB Trip/Close, change setting group etc.). When in this mode the relay returns a **negative acknowledgement of command** message to the master station.				

Table 45: Communication settings for IEC-103 protocol

1.3.14.4 Communications settings for Ethernet port – IEC 61850

Menu text	Default setting	Setting range		Step size
		Min.	Max.	
NIC Protocol	IEC 61850			
Indicates that IEC 61850 will be used on the rear Ethernet port.				
NIC MAC Address	Ethernet MAC Address			
Indicates the MAC address of the rear Ethernet port.				
NIC Tunl Timeout	5 mins	1 min	30 mins	1 min
Duration of time waited before an inactive tunnel to MiCOM S1 Studio is reset.				
NIC Link Report	Alarm	Alarm, Event, None		
Configures how a failed/unfitted network link (copper or fiber) is reported: Alarm - An alarm is raised for a failed link Event - An event is logged for a failed link None - Nothing reported for a failed link				

Table 46: Communication settings for IEC-61850 protocol

1.3.14.5 IED configurator (for IEC 61850 configuration)

The contents of the IED CONFIGURATOR column are mostly data cells, displayed for information but not editable. In order to edit the configuration, it is necessary to use the IED Configurator tool within MiCOM S1 Studio.

Menu text	Default setting	Setting range		Step size
		Min.	Max.	
IED CONFIGURATOR				
Switch Conf.Bank	No Action	No Action, Switch Banks		
Setting which allows the user to switch between the current configuration, held in the Active Memory Bank (and partly displayed below), to the configuration sent to and held in the Inactive Memory Bank.				
Restore MCL	No Action	No Action, Restore		
Setting which allows the user to restore MCL or no action.				
Active Conf.Name	Data			
The name of the configuration in the Active Memory Bank, usually taken from the SCL file.				
Active Conf.Rev	Data			
Configuration revision number of the Active Memory Bank, used for version management.				
Inact.Conf.Name	Data			
The name of the configuration in the Inactive Memory Bank, usually taken from the SCL file.				

ST

Menu text	Default setting	Setting range		Step size
		Min.	Max.	
Inact.Conf.Rev	Data			
Configuration revision number of the Inactive Memory Bank, used for version management.				
IP PARAMETERS				
IP Address	Data			
Displays the unique network IP address that identifies the relay.				
Subnet Mask	Data			
Displays the sub-network that the relay is connected to.				
Gateway	Data			
Displays the IP address of the gateway (proxy) that the relay is connected to.				
SNTP PARAMETERS				
SNTP Server 1	Data			
Displays the IP address of the primary SNTP server.				
SNTP Server 2	Data			
Displays the IP address of the secondary SNTP server.				
IEC 61850 SCL.				
IED Name	Data			
8 character IED name, which is the unique name on the IEC 61850 network for the IED, usually taken from the SCL file.				
IEC 61850 GOOSE				
GoEna	0x00000000	0x00000000	0x11111111	1
Setting to enable GOOSE publisher settings.				
Test Mode	0x00000000	0x00000000	0x11111111	1
The Test Mode cell allows the test pattern to be sent in the GOOSE message, for example for testing or commissioning.				
Ignore Test Flag	No	No, Yes		
When set to **Yes**, the test flag in the subscribed GOOSE message is ignored and the data treated as normal.				

Table 47: IEC-61850 IED configurator

1.3.14.6 Rear port 2 connection settings

The settings shown are those configurable for the second rear port which is only available with the courier protocol.

Menu text	Default setting	Setting range		Step size
		Min.	Max.	
COMMUNICATIONS				
RP2 Protocol	Courier			
Indicates the communications protocol that will be used on the second rear communications port.				
RP2 Card Status	Unsupported, Card Not fitted, EIA232 OK, EIA485 OK, K-BUS OK			
Second rear communication port 2 status.				
RP2 Port Config.	EIA232	EIA232, EIA485 or KBus		
This cell defines whether an electrical EIA(RS)232, EIA(RS)485 or KBus is being used for communication.				
RP2 Comms. Mode	IEC 60870 FT1.2 Frame	IEC 60870 FT1.2 Frame or 10-Bit No Parity		
The choice is either IEC 60870 FT1.2 for normal operation with 11-bit modems, or 10-bit no parity.				
RP2 Address	255	0	255	1
This cell sets the unique address for the relay such that only one relay is accessed by master station software.				

Menu text	Default setting	Setting range		Step size
		Min.	Max.	
RP2 Inactiv Timer	15 mins.	1 min.	30 mins.	1 min.
This cell controls how long the relay will wait without receiving any messages on the rear port before it reverts to its default state, including resetting any password access that was enabled.				
RP2 Baud Rate	19200 bits/s	9600 bits/s, 19200 bits/s or 38400 bits/s		
This cell controls the communication speed between relay and master station. It is important that both relay and master station are set at the same speed setting.				

Table 48: Rear port connection settings

1.3.15 Commissioning tests

There are menu cells which allow the status of the opto-isolated inputs, output relay contacts, internal digital data bus (DDB) signals and user-programmable LEDs to be monitored. Additionally there are cells to test the operation of the output contacts and user-programmable LEDs.

Menu text	Default setting	Available settings
COMMISSION TESTS		
Opto I/P Status	0000000000000000	
This menu cell displays the status of the relay's opto-isolated inputs as a binary string, a **1** indicating an energized opto-isolated input and a **0** a de-energized one.		
Relay O/P Status	00000000000000000000000000000000	
This menu cell displays the status of the relay's output contacts as a binary string, a **1** indicating an operated state and **0** a non-operated state. When the **Test Mode** cell is set to **Enabled** the **Relay O/P Status** cell does not show the current status of the output relays and hence can not be used to confirm operation of the output relays. Therefore it will be necessary to monitor the state of each contact in turn.		
Test Port Status	00000000	
This menu cell displays the status of the eight digital data bus (DDB) signals that have been allocated in the **Monitor Bit** cells.		
Monitor Bit 1	LED 1	0 to 1022
The eight **Monitor Bit** cells allow the user to select the status of which digital data bus signals can be observed in the **Test Port Status** cell or using the monitor/download port.		
Monitor Bit 8	LED 8	0 to 1022
The eight **Monitor Bit** cells allow the user to select the status of which digital data bus signals can be observed in the **Test Port Status** cell or via the monitor/download port.		
Test Mode	Disabled	Disabled, Test Mode, Contacts Blocked
The Test Mode menu cell is used to allow secondary injection testing to be performed on the relay without operation of the trip contacts. It also enables a facility to directly test the output contacts by applying menu controlled test signals. To select test mode the Test Mode menu cell should be set to **Test Mode**, which takes the relay out of service and blocks the maintenance, counters. It also causes an alarm condition to be recorded and the yellow **Out of Service LED** to illuminate and an alarm message **Prot'n. Disabled** is given. This also freezes any information stored in the CB Condition column and in IEC 60870-5-103 builds changes the Cause of Transmission, COT, to Test Mode. To enable testing of output contacts the Test Mode cell should be set to Contacts Blocked. This blocks the protection from operating the contacts and enables the test pattern and contact test functions which can be used to manually operate the output contacts. Once testing is complete the cell must be set back to **Disabled** to restore the relay back to service.		
Test Pattern	00000000000000000000000000000000	0 = Not Operated 1 = Operated
This cell is used to select the output relay contacts that will be tested when the **Contact Test** cell is set to **Apply Test**.		

Menu text	Default setting	Available settings
Contact Test	No Operation	No Operation, Apply Test, Remove Test
When the **Apply Test** command in this cell is issued the contacts set for operation (set to **1**) in the Test **Pattern cell** change state. After the test has been applied the command text on the LCD will change to **No Operation** and the contacts will remain in the Test State until reset issuing the **Remove Test** command. The command text on the LCD will again revert to **No Operation** after the **Remove Test** command has been issued. **Note:** When the **Test Mode** cell is set to **Enabled** the **Relay O/P Status** cell does not show the current status of the output relays and hence can not be used to confirm operation of the output relays. Therefore it will be necessary to monitor the state of each contact in turn.		
Test LEDs	No Operation	No Operation Apply Test
When the **Apply Test** command in this cell is issued the 8 (P241) or 18 (P242/3) user-programmable LEDs will illuminate for approximately 2 seconds before they extinguish and the command text on the LCD reverts to **No Operation**.		
Red LED Status	000000000000000000	
This cell is an 18 bit binary string that indicates which of the user-programmable LEDs on the relay are illuminated with the Red LED input active when accessing the relay from a remote location, a **1** indicating a particular LED is lit and a **0** not lit. If both the Green and Red LED status bits for an LED are on then this indicates the LED is yellow. This is only applicable to the P242/3 which has programmable tri-color LEDs – red/yellow/green.		
Green LED Status	000000000000000000	
This cell is an 18 bit binary string that indicates which of the user-programmable LEDs on the relay are illuminated with the Green LED input active when accessing the relay from a remote location, a **1** indicating a particular LED is lit and a **0** not lit. If both the Green and Red LED status bits for an LED are on then this indicates the led is yellow. This is only applicable to the P242/3 which has programmable tri-color LEDs – red/yellow/green.		
DDB 31 - 0	00000000000000000000001000000000	
Displays the status of DDB signals 0-31.		
DDB 1022 - 922	00000000000000000000000000000000	
Displays the status of DDB signals 1022 - 922. There are similar cells showing 32 bit binary strings for all DDBs from 0 - 1022. The first and last 32 bit words only are shown here.		

Table 49: Commissioning tests menu cells

1.3.16 Circuit breaker condition monitor setup

The Circuit Breaker condition monitoring includes features to monitor the CB condition such as the current broken, number of CB operations, number of CB operations in a set time and CB operating time. Alarms or a circuit breaker lockout can be raised for different threshold values.

Menu text	Default setting	Setting range		Step size
		Min.	Max.	
CB MONITOR SETUP				
Broken I^	2	1	2	0.1
This sets the factor to be used for the cumulative I^ counter calculation that monitors the cumulative severity of the duty placed on the interrupter. This factor is set according to the type of Circuit Breaker used.				
I^ Maintenance	Alarm Disabled	Alarm Disabled, Alarm Enabled		
Enables or disables the cumulative I^ maintenance alarm element.				
I^ Maintenance	1000 In^	1 In^	25000 In^	1 In^
Threshold setting for the cumulative I^ maintenance counter. This alarm indicates when preventative maintenance is due.				
No CB Ops Maint	Alarm Disabled	Alarm Disabled, Alarm Enabled		
Number of circuit breaker operations setting for the maintenance alarm.				

Menu text	Default setting	Setting range		Step size
		Min.	Max.	
No CB Ops Maint	10	1	10000	1
Threshold setting for number of circuit breaker operations for the maintenance alarm. This alarm indicates when preventative maintenance is due.				
CB Time Maint	Alarm Disabled	Alarm Disabled, Alarm Enabled		
Enables or disables the circuit breaker operating time maintenance alarm.				
No CB Ops Maint	0.1 s	0.005 s	0.5 s	0.001 s
Circuit breaker operating time threshold setting. This alarm is set in relation to the specified interrupting time of the circuit breaker.				

Table 50: Circuit breaker condition monitoring menu

1.3.17 Opto configuration

Menu text	Default setting	Setting range		Step size
		Min.	Max.	
OPTO CONFIG.				
Global Nominal V	24 - 27	24 - 27, 30 - 34, 48 - 54, 110 - 125, 220 - 250, Custom		
Sets the nominal battery voltage for all opto inputs by selecting one of the five standard ratings in the Global Nominal V settings. If Custom is selected then each opto input can individually be set to a nominal voltage value.				
Opto Input 1	24 - 27	24 - 27, 30 - 34, 48 - 54, 110 - 125, 220 - 250		
Each opto input can individually be set to a nominal voltage value if custom is selected for the global setting.				
Opto Input 2 - 16	24 - 27	24 - 27, 30 - 34, 48 - 54, 110 - 125, 220 - 250		
Each opto input can individually be set to a nominal voltage value if custom is selected for the global setting.				
Opto Filter Cntl.	1111111111111111	0 = Disable Filtering 1 = Enable filtering		
A binary string is used to represent the opto inputs available. A **1** or **0** is used to enable or disable for each input a pre-set filter of ½ cycle that renders the input immune to induced ac noise on the wiring.				
Characteristics	Standard 60% - 80%	Standard 60% - 80%, 50% - 70%		
Selects the pick-up and drop-off characteristics of the optos. Selecting the standard setting means they nominally provide a Logic 1 or On value for Voltages ≥80% of the set lower nominal voltage and a Logic 0 or Off value for the voltages ≤60% of the set higher nominal voltage.				

Table 51: Opto inputs configuration settings

1.3.18 Control inputs

The control inputs function as software switches that can be set or reset either locally or remotely. These inputs can be used to trigger any function that they are connected to as part of the PSL.

Menu text	Default setting	Setting range	Step size
CONTROL INPUTS.			
Ctrl Status	11111111111111111111111111111111		
This menu cell displays the status of the relay's control inputs as a binary string, a '1' indicating an ON control input and a '0' an OFF one.			
Control Input 1	No Operation	No Operation, Set, Reset	
Command to Set or Reset Control Input 1.			

ST

Menu text	Default setting	Setting range	Step size
Control Input 2 to 32	No Operation	No Operation, Set, Reset	
Commands to Set or Reset Control Inputs 2 to 32.			

Table 52: Control inputs settings

1.3.19 Control input configuration

The control inputs function as software switches that can be set or reset either locally or remotely. These inputs can be used to trigger any function that they are connected to as part of the PSL.

Menu text	Default setting	Setting range	Step size
CTRL I/P CONFIG.			
Hotkey Enabled	11111111111111111111111111111111		
Setting to allow the control inputs to be individually assigned to the **Hotkey** menu by setting **1** in the appropriate bit in the **Hotkey Enabled** cell. The hotkey menu allows the control inputs to be set, reset or pulsed without the need to enter the **CONTROL INPUTS** column.			
Control Input 1	Latched	Latched, Pulsed	
Configures the control inputs as either **latched** or **pulsed**. A latched control input will remain in the set state until a reset command is given, either by the menu or the serial communications. A pulsed control input, however, will remain energized for 10 ms after the set command is given and will then reset automatically (i.e. no reset command required).			
Ctrl Command 1	Set/Reset	Set/Reset, In/Out, Enabled/Disabled, On/Off	
Allows the SET / RESET text, displayed in the hotkey menu, to be changed to something more suitable for the application of an individual control input, such as **ON / OFF, IN / OUT** etc.			
Control Input 2 to 32	Latched	Latched, Pulsed	
Configures the control inputs as either latched or pulsed.			
Ctrl Command 2 to 32	Set/Reset	Set/Reset, In/Out, Enabled/Disabled, On/Off	
Allows the SET / RESET text, displayed in the hotkey menu, to be changed to something more suitable for the application of an individual control input, such as ON / OFF, IN / OUT etc.			

Table 53: Control inputs configuration settings

1.3.20 Function keys

Menu text	Default setting	Setting range		Step size
		Min.	**Max.**	
FUNCTION KEYS				
Fn. Key Status	0000000000			
Displays the status of each function key.				
Fn. Key 1	Unlocked	Disabled, Locked, Unlocked (Enabled)		
Setting to activate the function key. The **Locked** setting allows a function key output that is set to toggle mode to be locked in its current active state.				
Fn. Key 1 Mode	Toggled	Toggled, Normal		
Sets the function key in toggled or normal mode. In **Toggled** mode, the first keypress will latch the function key DDB output signal ON and the next keypress will reset the function key DDB output to OFF. This feature can be used to enable/disable relay functions. In the **Normal** mode the function key DDB signal output will remain ON/ **high** as long as the key is pressed.				
Fn. Key 1 Label	Function Key 1			
Allows the text of the function key to be changed to something more suitable for the application.				
Fn. Key 2 to 10 Status	Unlocked	Disabled, Locked, Unlocked (Enabled)		
Setting to activate the function key. The **Locked** setting allows a function key output that is set to toggle mode to be locked in its current active position.				

Menu text	Default setting	Setting range		Step size
		Min.	Max.	
Fn. Key 2 to 10 Mode	Toggled	Toggled, Normal		
Sets the function key in toggled or normal mode. In **Toggled** mode, the first keypress will latch the function key DDB output signal ON and the next keypress will reset the function key DDB output to OFF. This feature can be used to enable/disable relay functions. In the Normal mode the function key DDB signal output will remain ON/ **high** as long as the key is pressed.				
Fn. Key 2 to 10 Label	Function Key 2 to 10			
Allows the text of the function key to be changed to something more suitable for the application.				

Table 54: Function keys configuration settings

1.3.21 Control input labels

Menu text	Default setting	Setting range	Step size
CTRL I/P LABELS			
Control Input 1	Control Input 1	16 Character Text	
Text label to describe each individual control input. This text will be displayed when a control input is accessed by the hotkey menu and it is displayed in the programmable scheme logic description of the control input.			
Control Input 2 to 32	Control Input 2 to 32	16 Character Text	
Text label to describe each individual control input. This text will be displayed when a control input is accessed by the hotkey menu and it is displayed in the programmable scheme logic description of the control input.			

Table 55: Control input label settings

1.3.22 PSL DATA column

Menu text	Default setting	Setting range	Step size
PSL DATA			
Grp 1 PSL Ref	Model Number	32 Character Text	
When downloading a PSL to the relay, the user will be prompted to enter which groups the PSL is for and a reference ID. The first 32 characters of the reference ID will be displayed in this cell. The ⟨ . and ⟩ keys can be used to scroll through 32 characters as only 16 can be displayed at any one time.			
18 Nov 2002 08:59:32.047	Data.		
This cell displays the date and time when the PSL was down loaded to the relay.			
Grp 1 PSL ID – 2062813232	Data.		
This is a unique number for the PSL that has been entered. Any change in the PSL will result in a different number being			
Grp 2 PSL Ref	Model Number	32 Character Text	
When downloading a PSL to the relay, the user will be prompted to enter which groups the PSL is for and a reference ID. The first 32 characters of the reference ID will be displayed in this cell. The ⟨ and ⟩ keys can be used to scroll through 32 characters as only 16 can be displayed at any one time.			
18 Nov 2002 08:59:32.047	Data.		
This cell displays the date and time when the PSL was down loaded to the relay.			
Grp 2 PSL ID – 2062813232	Data.		
This is a unique number for the PSL that has been entered. Any change in the PSL will result in a different number being			

Table 56: PSL data menu

ST

OP

OPERATION

Date:	**24th November 2009**
Hardware suffix:	**J (P241) K (P242/3)**
Software version:	**57**
Connection diagrams:	**10P241xx (xx = 01 to 02)** **10P242xx (xx = 01 to 01)** **10P243xx (xx = 01 to 01)**

OP

CONTENTS

1	**OPERATION OF INDIVIDUAL PROTECTION FUNCTIONS**	**7**
1.1	**Motor starting and running (stall protection) (48/51LR/50S/14)**	**7**
1.1.1	Stall protection description	7
1.1.1.1	Prolonged start	7
1.1.1.2	Locked rotor during starting – (stall time < start time)	8
1.1.1.3	Stall during running	8
1.1.1.4	Re-acceleration after a reduction in system voltage	9
1.2	**Number of starts limitation (66)**	**9**
1.2.1	Starts inhibition	9
1.2.2	Time between starts	11
1.3	**Anti-Backspin protection (27 remanent)**	**12**
1.3.1	Anti-Backspin description	12
1.3.1.1	2 VT + Vremanent is connected:	13
1.4	**Thermal overload (49)**	**13**
1.4.1	Thermal replica	13
1.4.2	Thermal trip	14
1.4.2.1	Compensation for ambient temperature by RTD	14
1.4.2.2	Motor thermal state	15
1.4.2.3	Thermal lockout	16
1.4.2.4	Emergency restart	16
1.4.2.5	User programmable curve for thermal over load protection	17
1.5	**Motor differential protection (87)**	**17**
1.5.1	Biased differential protection	18
1.5.1.1	Differential and bias current calculation	19
1.5.2	High impedance differential protection	21
1.5.3	Self balance winding differential	22
1.6	**Short circuit protection (50/51)**	**23**
1.6.1	RI curve	25
1.6.2	Timer hold facility	25
1.6.3	User programmable overcurrent protection	26
1.7	**Negative sequence overcurrent protection (NPS) (46)**	**27**
1.8	**Voltage elements (27/59/59N)**	**27**
1.8.1	Undervoltage protection (27)	27
1.8.2	Overvoltage protection (59)	28
1.8.3	3 Phase voltage checking (47/27)	29
1.8.4	Residual overvoltage / NVD protection (59N)	29
1.9	**Underfrequency protection (81U)**	**31**
1.10	**Field failure protection function (40)**	**32**

OP

1.11 Power elements (32R/37/55) 33
1.11.1 Reverse power (32R) 33
1.11.2 Out of step protection (under power factor) (55) 34
1.11.2.1 Principle 34
1.11.2.2 Feature description 35
1.11.3 Loss of load (under power) (37) 35
1.12 Sensitive earth fault protection function (50N/51N/67N/32N/64N) 36
1.12.1 User programmable sensitive earth fault protection 38
1.13 Derived earth fault protection function (50N/51N) 39
1.13.1 User programmable derived earth fault protection 40
1.14 Resistive temperature device (RTD) thermal protection 40
1.14.1 Principle of the RTD connection 42
1.15 Circuit breaker failure protection (50BF) 43
1.16 Current loop inputs and outputs 44
1.16.1 Current loop inputs 44
1.16.2 Current loop output 46

2 OPERATION OF NON PROTECTION FUNCTIONS 50
2.1 VT supervision 50
2.1.1 Loss of all three-phase voltages under load conditions 50
2.1.2 Absence of three-phase voltages upon line energization 50
2.1.2.1 Inputs 51
2.1.2.2 Outputs 51
2.1.3 Operation 52
2.2 CT supervision 53
2.3 Circuit breaker state monitoring 54
2.4 Circuit breaker condition monitoring 55
2.4.1 Circuit breaker condition monitoring features 55
2.5 Circuit breaker control 56
2.6 Changing setting groups 57
2.7 Control inputs 58
2.8 Enhanced opto-input time stamping 59
2.9 PSL DATA column 59
2.10 Reset of programmable LEDs and output contacts 60
2.11 Real time clock synchronization via opto-inputs 60
2.12 Read only mode 60
2.12.1 Protocol / port Implementation: 61
2.12.1.1 IEC 60870-5-103 protocol on rear port 1: 61
2.12.1.2 Courier protocol on rear port 1/2 and Ethernet 61
2.12.1.3 IEC 61850 61
2.12.1.4 Courier database support 62
2.12.2 New DDB signals 62
2.13 Any trip 62

OP

2.14 Function keys (P242/3) 63

2.15 Phase rotation 64

2.15.1 Description 64

2.15.2 Phase reversal switches affecting all CTs and VTs 64

2.15.2.1 System config settings 64

FIGURES

Figure 1: Start successful 7

Figure 2: Locked rotor detection 8

Figure 3: Reacceleration detection 9

Figure 4: Start inhibition example 1 10

Figure 5: Start inhibition example 2 11

Figure 6: Time between starts 12

Figure 7: Anti-Backspin logic diagram 13

Figure 8: Ambient temperature compensation 15

Figure 9: Thermal overload protection logic diagram 16

Figure 10: Cooling time constant 16

Figure 11: Principle of circulating current differential protection 17

Figure 12: Motor differential logic diagram 18

Figure 13: Biased differential protection operating characteristic 19

Figure 14: Relay connections for biased differential protection 21

Figure 15: Principle of high impedance differential protection 21

Figure 16: Relay connections for high impedance differential protection 22

Figure 17: Self-balance winding differential protection 23

Figure 18: Definite time overcurrent element 23

Figure 19: Non-directional overcurrent logic diagram 26

Figure 20: Negative sequence overcurrent logic diagram 27

Figure 21: Undervoltage - single and three phase tripping mode (single stage) 28

Figure 22: Overvoltage - single and three phase tripping mode (single stage) 29

Figure 23: 3 VTS configuration 30

Figure 24: Alternative relay connections for residual overvoltage/NVD protection 30

Figure 25: Residual overvoltage logic (single stage) 31

Figure 26: Underfrequency logic 32

Figure 27: Field failure protection characteristics 32

Figure 28: Field failure logic diagram 33

Figure 29: Reverse power protection 34

Figure 30: Reverse power logic diagram 34

Figure 31: Out of step protection 34

Figure 32: Out of step logic diagram 35

Figure 33: Loss of load (under power) protection 36

Figure 34: Loss of load logic diagram 36

Figure 35: Directional sensitive earth fault characteristic 37
Figure 36: Wattmetric directional characteristic 37
Figure 37: Directional SEF with VN polarization and wattmetric SEF 38
Figure 38: Derived earth fault characteristic 39
Figure 39: Derived directional earth fault logic diagram 40
Figure 40: Typical derived earth fault application 40
Figure 41: Connection for RTD thermal probes 41
Figure 42: RTD logic diagram 42
Figure 43: description needed 42
Figure 44: CB fail logic 44
Figure 45: Relationship between the transducer measuring quantity and the current input range 45
Figure 46: Analog (current loop) input logic diagram 46
Figure 47: Relationship between the current output and the relay measurement 47
Figure 48: VT supervision logic diagram 51
Figure 49: CT supervision diagram 54
Figure 50: CB state monitoring 55
Figure 51: Remote control of circuit breaker 57
Figure 52: description needed 62
Figure 53: description needed 63
Figure 54: Standard and reverse phase rotation 64

OP

TABLES

Table 1: Standard IDMT curves and their corresponding coeficients 24
Table 2: IEEE and US reset curve "S" coefficient values 25
Table 3: CBF resetting options 43
Table 4: Impedance per kilometre values of typical cables 47
Table 5: Current loop output parameters 49
Table 6: VTS inputs level detector settings outputs 51
Table 7: VTS outputs 52
Table 8: Possible states of CB auxiliary contacts and the CTS element corresponding actions 55
Table 9: Circuit breaker condition monitoring features 56
Table 10: Control inputs setting columns and their descriptions 58
Table 11: Control inputs commands 58
Table 12: Control inputs labels 58
Table 13: Example of time sync by using opto-inputs 60
Table 14: Setting example to avoid event buffer overflow 60
Table 15: Phase rotation setting in SYSTEM CONFIG 64

1 OPERATION OF INDIVIDUAL PROTECTION FUNCTIONS

The following sections detail the individual protection functions.

1.1 Motor starting and running (stall protection) (48/51LR/50S/14)

1.1.1 Stall protection description

Comprehensive features are available to protect the motor during the critical starting sequence. Measurements and diagnostics are also available, in order to help the user in the maintenance of the electrical process: for example, last start time and last start current can be displayed on the HMI of the relay.

1.1.1.1 Prolonged start

Three criteria can be used to detect a motor start:

Single criteria: a change in the interrupting device position is detected, that is from open to close or detection of a starting current of more than the starting current threshold (start criteria is set to **52a** or **I** in the **STALL DETECTION** menu settings)

Extended criteria: a change in the interrupting device position is detected, along with the detection of a starting current of more than the starting current threshold, **52A+I**. Both criteria have to be present within a 90 ms time period.

Once a start has been detected, using one of these methods, and the current fails to fall below the current threshold before normal starting time threshold, a trip will be initialized.

A typical diagram for the detection of a successful start is shown below, with the use of the extended criteria.

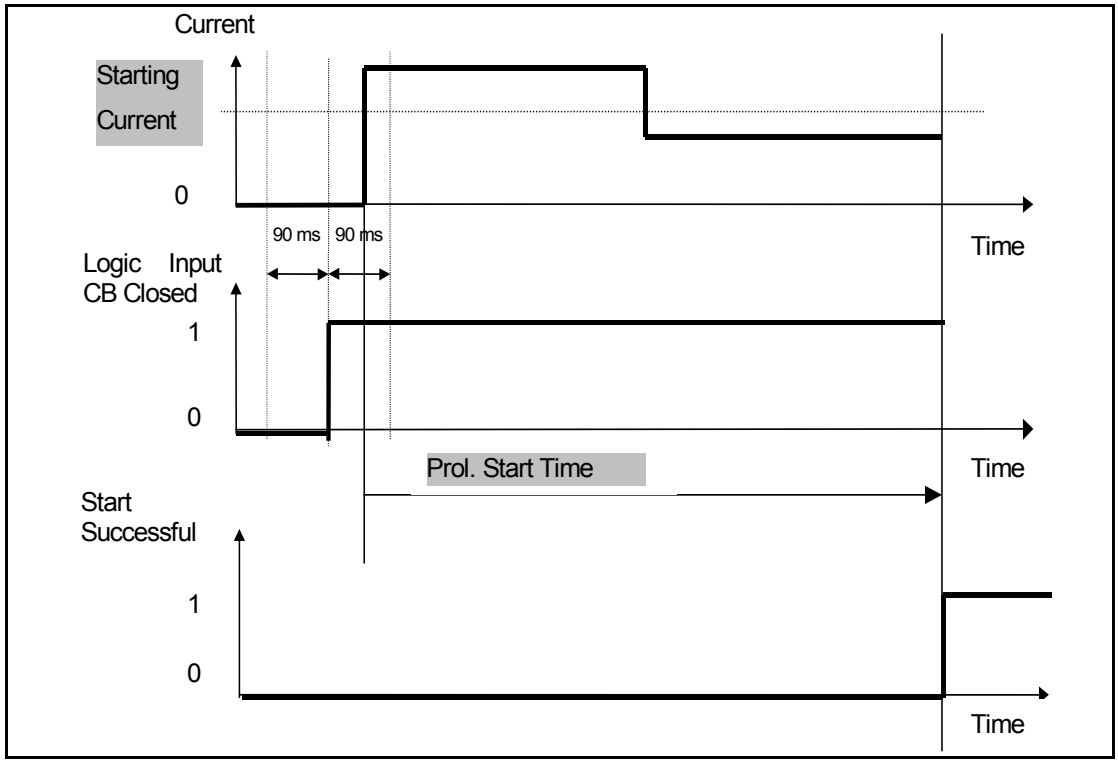

Figure 1: Start successful

An alarm **Prolonged Start : DDB 299** will be generated if the current fails to fall below the starting current threshold before the end of the starting timer.

OP

OP

1.1.1.2 Locked rotor during starting – (stall time < start time)

For certain applications, such as motors driving high inertia loads, the stall withstand time may be safely exceeded during starting, without resulting in an over temperature condition within the motor. Consequently, since the stall withstand time is less than the start time, it is not possible to use time alone to distinguish between a start and a stall condition.

The P24x relay overcomes this problem by utilizing a contact from a speed sensing device wired into a specified opto input (Speed Input: DDB 104) on the relay. Change of state of this contact indicates successful acceleration of the motor. If the line current exceeds the value set in the **Starting current** and the speed of the motor is equal to zero, the relay will trip following the programmed **Stall Time** (Stall Rotor-Strt: DDB 302).

Note: The breaker status must be mapped for this function, and the breaker must be closed (52A input high) for the relay to operate in the event of a locked rotor detection.

Figure 2 shows the principle of this feature:

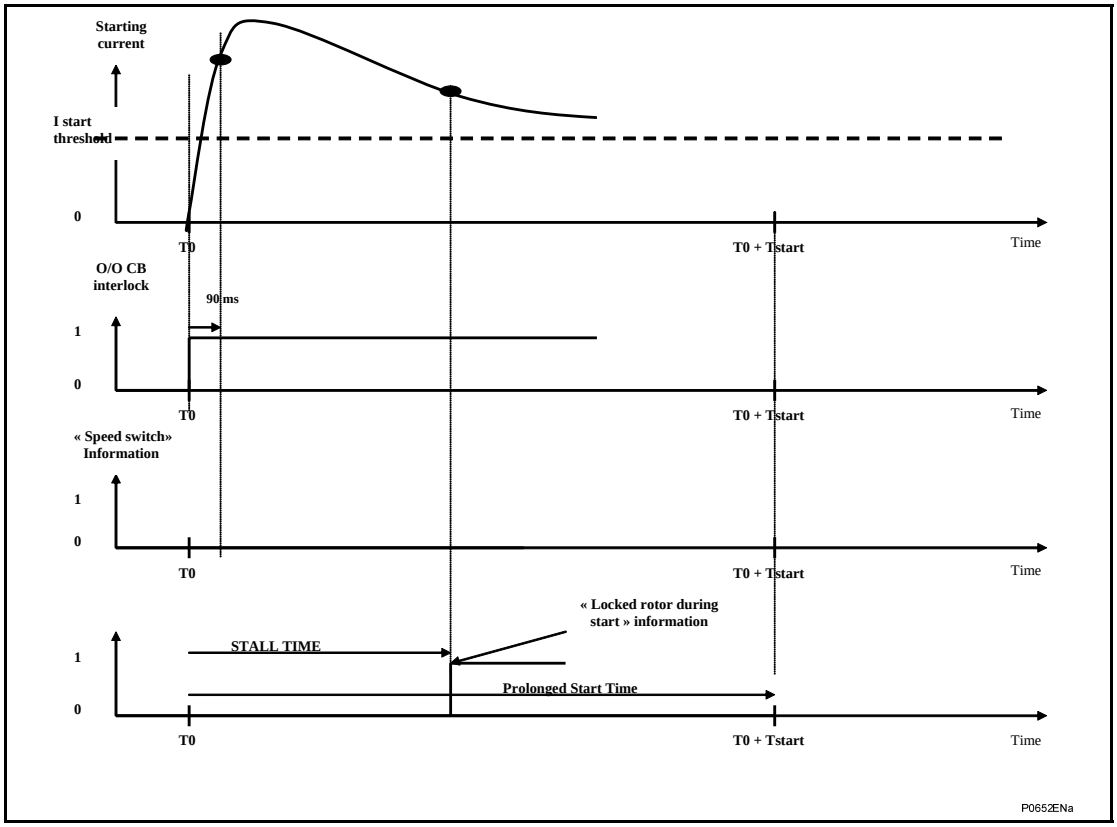

Figure 2: Locked rotor detection

The **Stall Rot-Strt** setting must be enabled. In this case, after the detection of the start, both timers **Prol.Start Time** and **Stall Time** are running. A typical setting could be 5 s for the prolonged start timer and 1 s for the stall timer.

If the current falls below the starting current threshold before the end of the **Stall time**, and if the speed switch doesn't detect the rotation of the motor, this feature will NOT generate a tripping order.

1.1.1.3 Stall during running

A stall during running is given by a current exceeding the programmed current threshold, following a successful start. If the current fails to fall below the current threshold before the rotor stall time delay has elapsed, a trip will be initiated (Stall Rotor-run: DDB 301).

1.1.1.4 Re-acceleration after a reduction in system voltage

The stall protection will be disabled, to allow for re-acceleration, if a low voltage condition exists on the system for a time in excess of 100 ms and if, on recovery of the voltage, the current exceeds the stalling current threshold within 5 seconds (Reac in Progress: DDB 300).

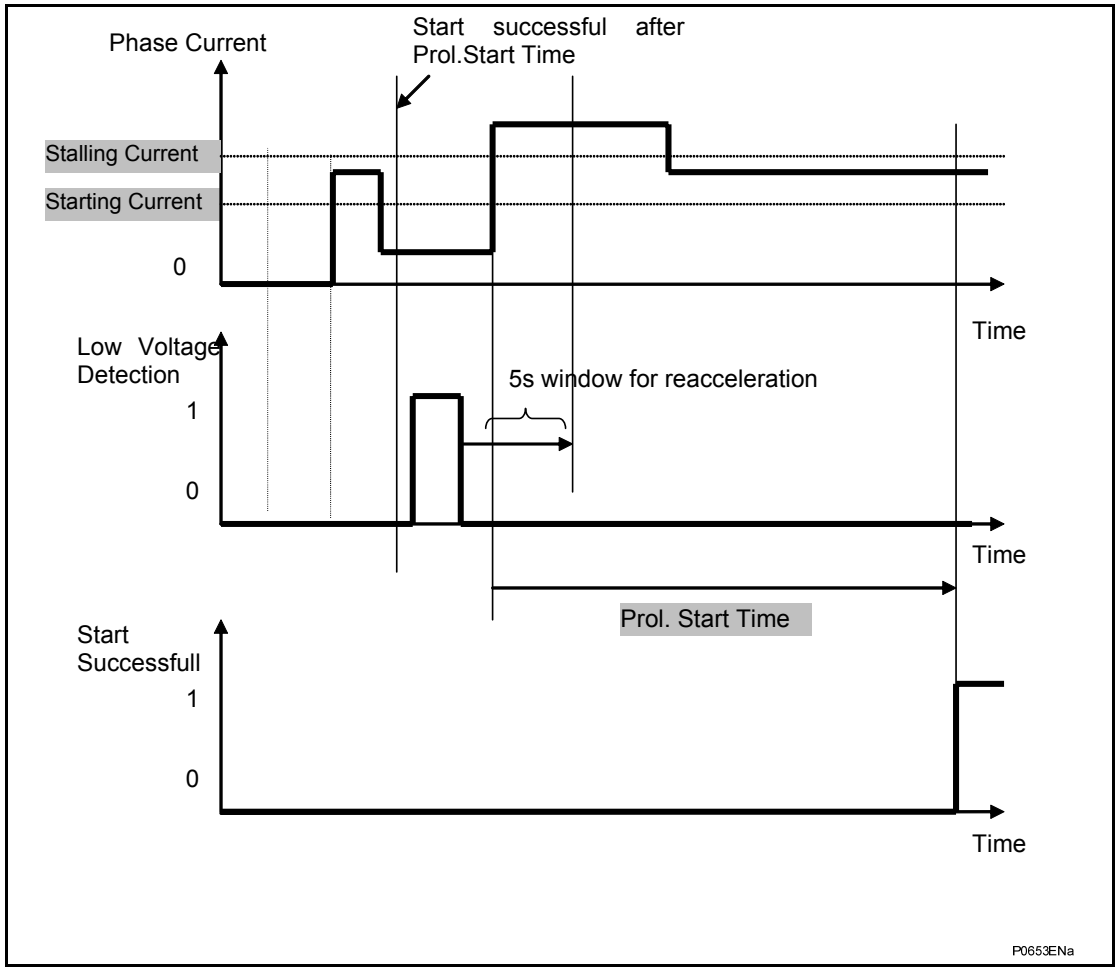

Figure 3: Reacceleration detection

If the current fails to fall below the stalling current threshold before the end of the **Prol.Start Time**, the relay will generate a tripping order (Reacc Low Volt: DDB 296).

If the current exceeds the stalling current threshold after the 5 s window used for reacceleration criteria, the stall protection will be enabled and a trip will occur.

This function is disabled during the starting period.

1.2 Number of starts limitation (66)

1.2.1 Starts inhibition

Any motor has a restriction on the number of starts that are allowed in a defined period without the permitted winding temperatures being exceeded. The settings in the **Limit Nb Starts** protection menu monitors these starts.

Two types of starts are supervised:

- Hot Starts are defined by an initial thermal state greater than 50%
- Cold Starts are defined by an initial thermal state lower than 50%

The maximum allowable number of starts per period is an auto-reset inhibit function which monitors the number of motor starts in the set period. At the end of the supervising period the number of starts is decremented.

Starts are detected using the 52a status from the breaker. Once the number of starts equals the user defined setting, the start inhibit is enabled for the inhibit time set period.

Note: If User Curve is enabled in the Thermal Overload protection, the thermal state remains at 0% for as long as I_{eq} is less than Ith. As a consequence, the number of hot starts and cold starts protections should be disabled because they could give unexpected result

First diagram :

The maximum number of starts within the **Supervising Time** has been reached, therefore, the **Inhib. Start Time** is initiated. The remaining time **Supervising Time - tn** is **greater** than the **Inhib. Start Time**, so the start inhibition remains for a duration equal to **Supervising time – tn.** Therefore, with the default settings and a tn of 8 mins for example, the inhibition time before a new start will be 52 mins.

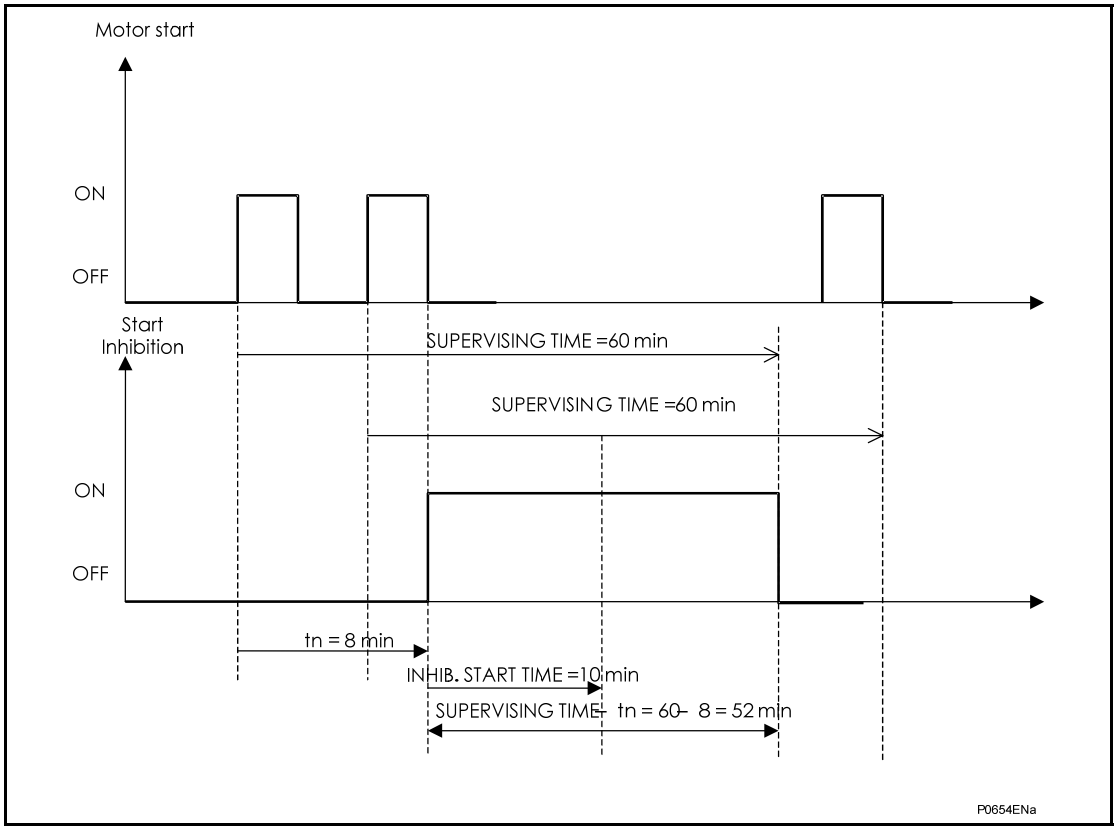

Figure 4: Start inhibition example 1

Second diagram :

The maximum number of starts within the **Supervising Time** has been reached, therefore, the **Inhib. Start Time** is initiated. The remaining time **Supervising Time – tn** is shorter than the **Inhib. Start Time**, so the start inhibition remains for a duration equal to **Inhib. Start Time**. Therefore, with the default settings and a **tn** of 55 mins for example, the inhibition time before a new start will be 10 mins.

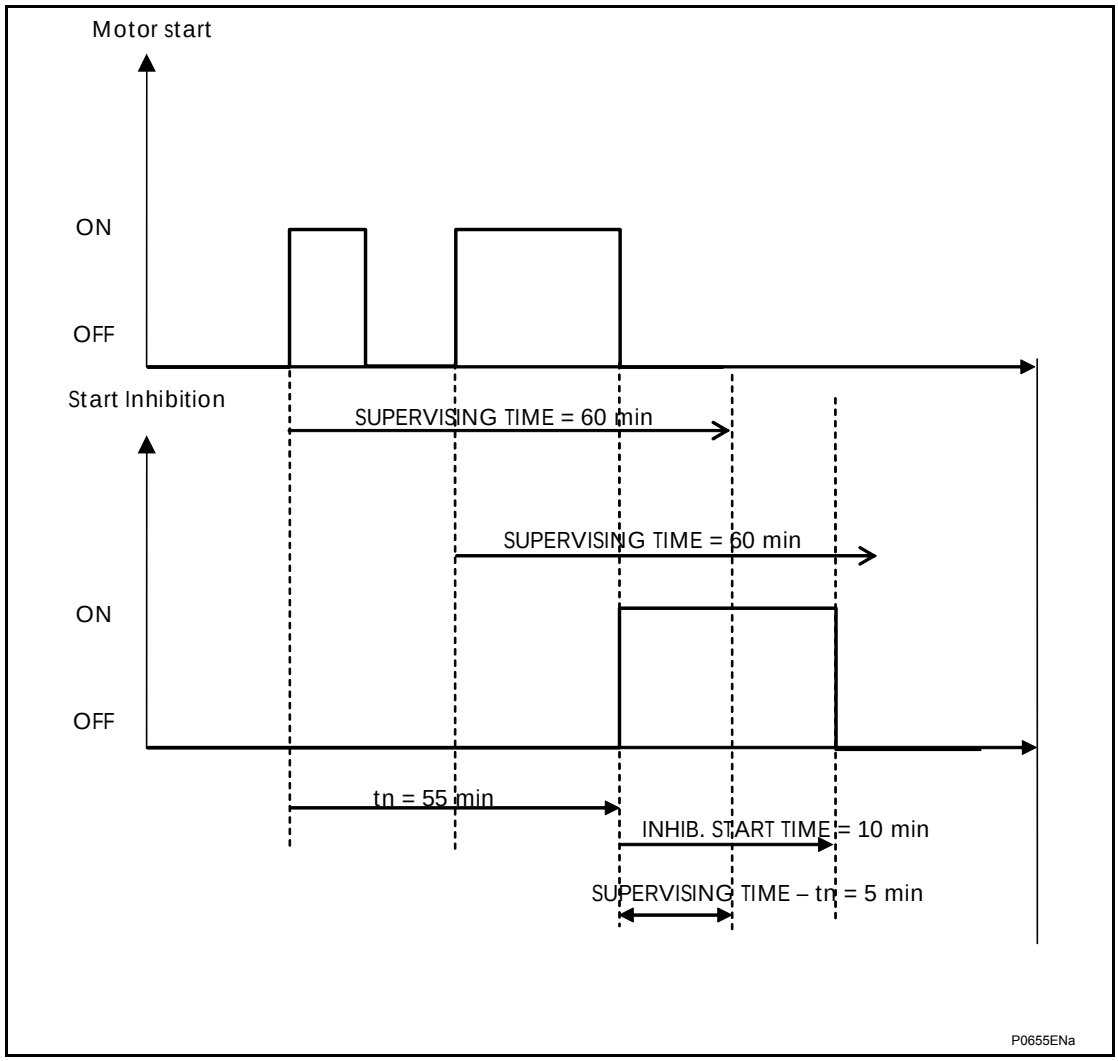

Figure 5: Start inhibition example 2

The **Start Lockout** information (Hot Start Nb: DDB 181, Cold Start Nb: DDB 182) will be present until the end of the **Inhib.Start Time** or as long as the counter of the number of starts is equal to the maximum allowed starts.

1.2.2 Time between starts

Immediately following a start, there is a start inhibit as soon as the interrupting device is opened, for a period equal to the remaining time of the **Time between start** settings.

The **Start Lockout** information (Time Betwe Start: DDB180) will be present until the end of the greater time delay between the **Inhib.Start Time** and the **Time Between Start**.

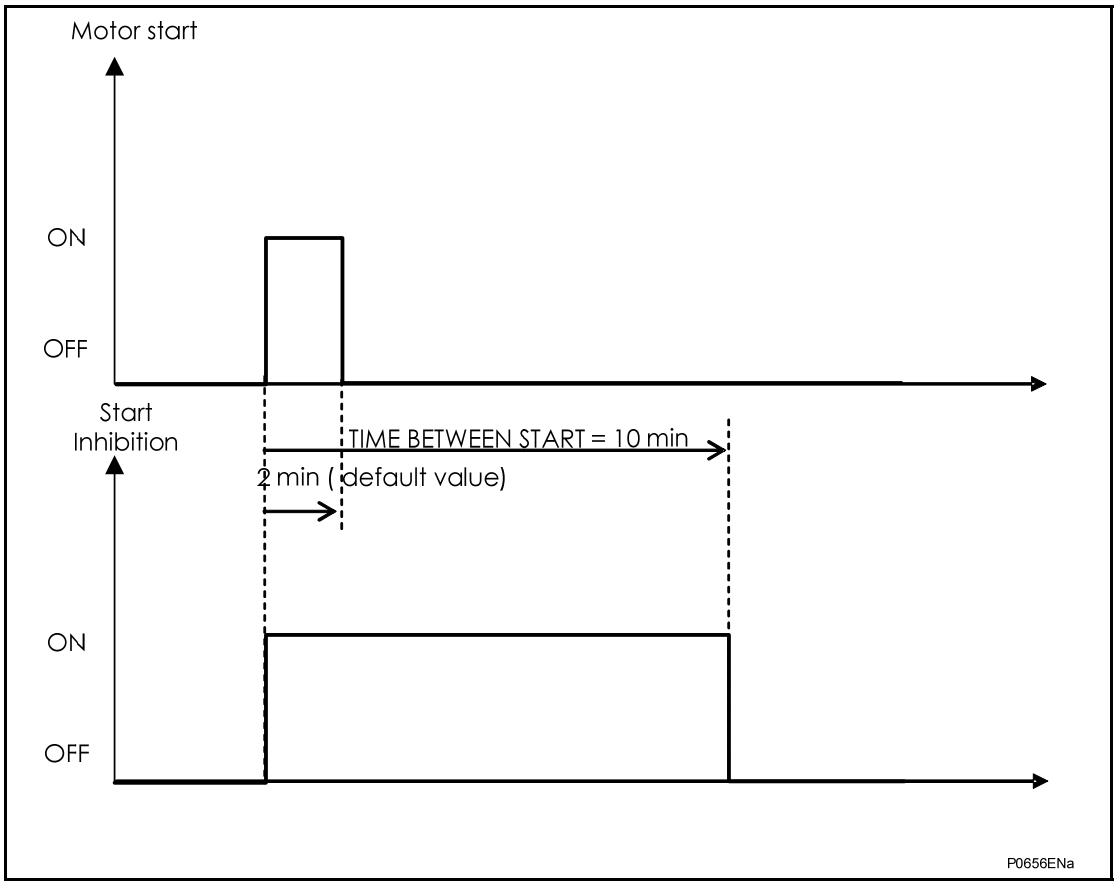

Figure 6: Time between starts

1.3 Anti-Backspin protection (27 remanent)

1.3.1 Anti-Backspin description

The anti-backspin function is mainly used for a motor with high inertia, or a synchronous motor in deceleration and is used to detect when the rotor has completely stopped, in order to allow re-starting of the motor.

The operation of this function depends on the parameter **VT connecting mode**: If this is set to **2 VT + Vremanent**, then the function uses an undervoltage with the connected Phase-Phase remanent voltage. If not, the function uses only a time delay.

As soon as the CB is opened, the delay setting **Anti-backs Delay** is started and the DDB signal **Antibkspin Alarm: DDB233** goes high.

Notes: When the 2 VT + Vremanent input is used, it must be connected to V_3 input on the relay by using a third VT while the first VT is connected to V_1 (V_{ab}) and the second VT connected to V_2 (V_{bc}) inputs on the relay (refer to the connection diagram in the Installation chapter, *P24x/EN I*N).

Connection of remanent voltage to input V_3 on the relay disables measurement of V_a, V_b, V_c, and V_0. Hence all power and energy calculations (W, VA, VAr, Wh) are inhibited. Also the following quantities will become invisible in the relevant measurement column:

- Peak and RMS quantities of phase to neutral voltages of all three phases
- V0
- Watts, VA, VAr and Wh

As a result, all of the following protection functions which require measured quantities of phase to neutral and/or V_0 will become disabled or invisible:

- 'Out of step'
- 'Field failure'

- 'Residual O/V'
- 'Reverse power'
- 'Loss of Load'
- '3 Phase Voltage Check'
- Directional elements of 'Derived Earth Fault' and 'Sensitive Earth Fault'
- Also the disturbance recorder can not be configured for any of the phase to neutral voltages.

1.3.1.1 2 VT + Vremanent is connected:

During the **Anti-backs Delay** time the remanent phase-phase voltage must decrease below the **VRem Anti-backs** setting. As soon as this voltage is under the threshold, the DDB signal **Antibkspin Alarm: DDB 233** is reset (along with the time delay) and a new start is authorized. If the threshold is not reached and the time delay expires, the signal **Antibkspin Alarm** is reset and a new start is authorized (see Figure 7).

2 VT + Vremanent is not connected:

When the 2 VT + Vremanent VT is not used, anti-backspin protection function uses a time delay only **Anti-backs Delay**. While the timer is timing, a new start is not authorized. A new start is authorized only when the timer has timed out.

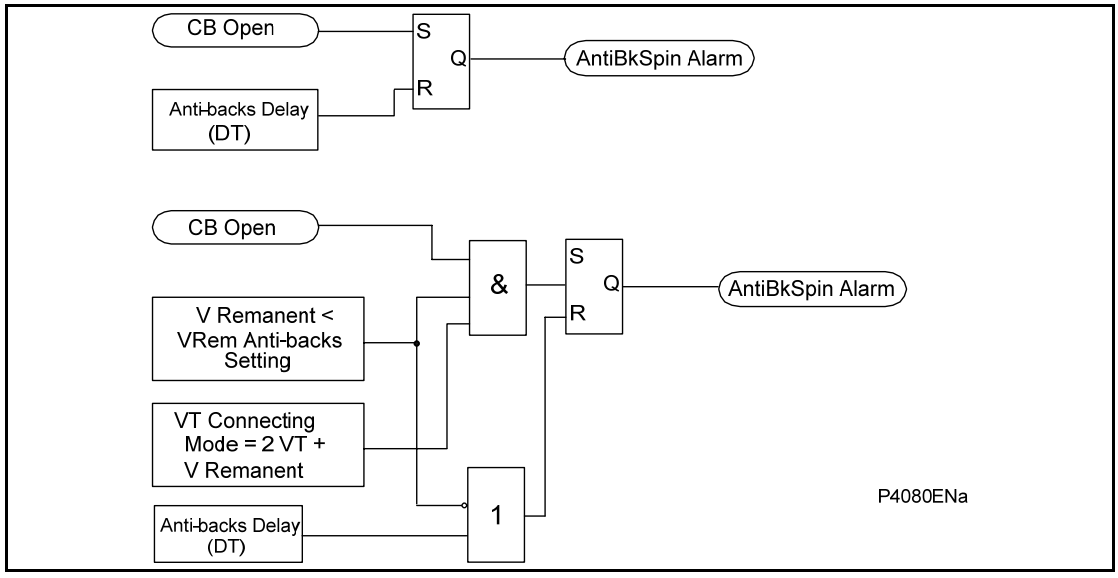

Figure 7: Anti-Backspin logic diagram

1.4 Thermal overload (49)

In order for the Thermal overload protection function to operate correctly, it is essential that the circuit breaker to be closed and its associated closing signal, 52a, to be recognized by the relay.

1.4.1 Thermal replica

Both the positive or RMS and negative sequence currents are analysed, to monitor the thermal state accounting for any phase unbalance present. This thermal model takes into account the overheating, which will be generated by the negative phase sequence current in the rotor.

The equivalent motor heating current is calculated by:

$$I_{eq} = \sqrt{(I_1 2 + K I_2^2)}$$

Note: This equation is used in software version A4.x(09) and before

or

$$I_{eq} = \sqrt{(I_{rms}^2 + K I_2^2)}$$

Note: This equation is used in software version B1.0(20) or later

Where :

I_1 = Positive sequence current

I_{rms} : root mean square current

I_2 : negative sequence current

K is a constant proportional to the thermal capacity of the motor

The equivalent motor heating current is calculated every 20 ms. The maximum value recorded will then be utilized by the thermal algorithm.

1.4.2 Thermal trip

A multiple time constant thermal replica is used, in order to take into account different operating conditions of the motor : overload, starting or cooling conditions.

The equation used to calculate the trip time at 100% of thermal state is :

$$t = \tau \ln((k^2 - A^2)/(k^2-1))$$

Where the value of τ (thermal time constant) depends on the current value absorbed by the motor :

Over load time constant	$\tau = T_1$	if $I_{th} < I_{eq} <= 2I_{th}$
Start-up time constant	$\tau = T_2$	if $I_{eq} > 2I_{th}$
Cooling time constant	$\tau = T_r$	if interrupting device opened

Measured thermal load (or thermal capacity) $k = I_{eq} / I_{th}$

Ith is thermal setting

A is initial state of the machine in percentage of the thermal state

The initial state of the machine is included in the time to trip calculation algorithm so that the operating time for a thermal trip will be decreased in case of a hot motor start.

During the starting of motors which have extreme starting conditions (for example, very long start time, very high start current value), an inhibition of the thermal curve during start-up is provided, in order to avoid false trips.

Note: When the thermal state of the motor reaches 90%, this value is retained at 90% during the remaining period of the **Prol. Start Time**.

Comprehensive measurements and diagnostics can be accessed through the HMI : for example, the estimated time to the next thermal trip is calculated (see '**MEASUREMENTS 3**' menu).

1.4.2.1 Compensation for ambient temperature by RTD

To compensate for the ambient temperature variation, the thermal setting is corrected dependent upon the ambient temperature: the new value of the thermal capacity used becomes,

$$K' = I_{eq} / (coef * I_{th})$$

Where the correction coefficient is calculated depending upon the ambient temperature as shown below:

Coef = 1 for T < 40° C

Coef = 1.4 - (0.01T) for 40° C ≤ T ≤ 65° C

Coef = 0.75 for T > 65° C

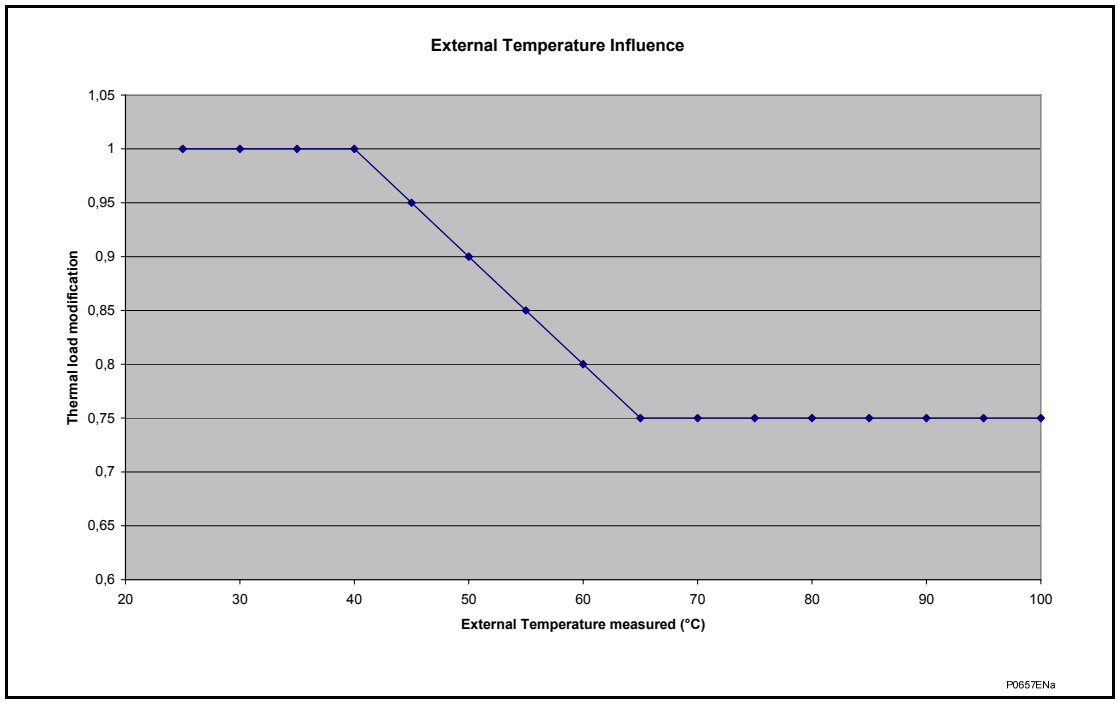

Figure 8: Ambient temperature compensation

This compensation factor will be taken into account when any one of the ten possible RTDs are selected to measure the external/ambient temperature (see menu **RTD PROTECTION**).

The P24x relay can accommodate ten PT100, Ni100 or Ni120 RTDs. These RTDs are used to monitor the temperature of the stator windings, bearings and ambient temperature. Each RTD software element has two time delayed outputs; one for alarm and one for trip.

RTDs are fragile and susceptible to over voltage, therefore they are usually used in pairs; one main and one back-up. Open circuit and short circuit detection of the RTDs is also provided.

Only one external RTD will influence the thermal curve and second RTD is for the back-up.

1.4.2.2 Motor thermal state

The thermal state is stored in non-volatile memory and updated every second. On resumption of the power supply, the value of the thermal state is restored if it is less than 90%. However, if it is greater than 90%, it is then reset to 90%, therefore allowing adequate protection and reducing the possibility of premature thermal overload tripping.

The thermal state of the motor is displayed in the measurements column **MEASUREMENTS 3** of the relay menu. This can be reset by an opto input (Reset Thermal: DDB109), using the user interface or through the remote communications. The latter two methods are password protected.

Note: Resetting the thermal state, any associated inhibits will also reset (for example start inhibit threshold).

A DDB signal **Thermal Trip** is available to indicate tripping of the element (DDB 236). A further DDB signal **Thermal Alarm** is generated from the thermal alarm stage (DDB 178). The state of the DDB signal can be programmed to be viewed in the **Monitor Bit** x cells of the **COMMISSION TESTS** column in the relay.

OP

Figure 9: Thermal overload protection logic diagram

1.4.2.3 Thermal lockout

This function compares the thermal capacity available with the lockout setting immediately after a trip, for example when the interrupting device is open. If the thermal capacity available is insufficient to allow restart, an output contact programmed for the lockout function (Thermal Lockout: DDB 179) will be energized, which will inhibit a restart. When the motor has cooled down, this function resets the lockout output contact.

The thermal lockout will drop-off at 97% of the thermal lockout threshold.

The estimated time to next start (that is, to reach the thermal lockout threshold) is available in the **MEASUREMENTS 3** menu and is given by the following formula:

OP

$$T = Tr * Ln (\theta 1/\theta 2)$$

Where:

T_r = cooling time constant,

θ_1 = initial thermal state,

θ_2 = final thermal state = 97% of thermal lockout threshold.

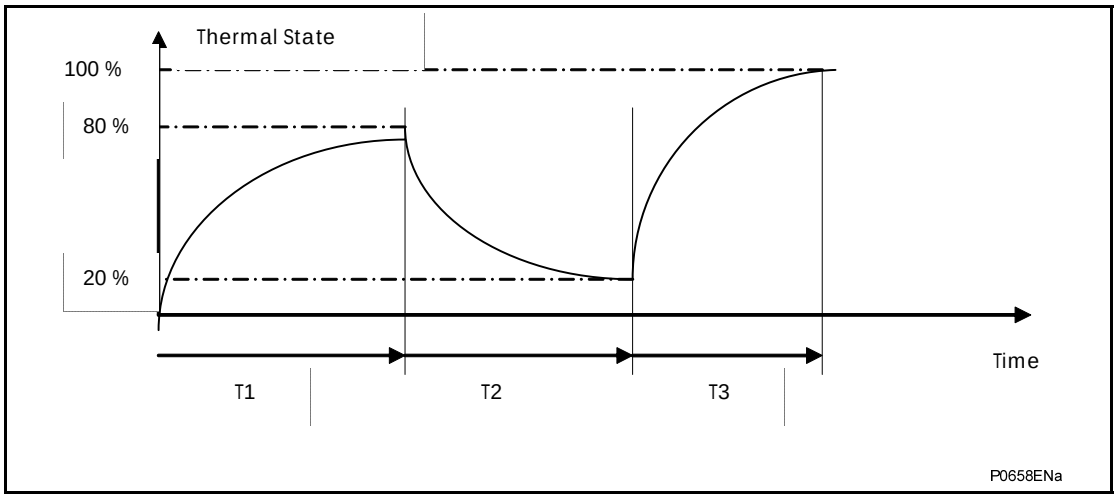

Figure 10: Cooling time constant

1.4.2.4 Emergency restart

Circumstances may dictate the necessity to restart a hot motor. An emergency restart can be enabled through an opto input (Emergency Rest: DDB108), via the user interface, or via the remote communications. This feature effectively removes all start inhibits (Thermal lockout, No of Hot starts, No of cold starts, and the Time between starts).

This feature will reset the thermal memory to 90% if it is greater than 90% or stays as it is if less than 90%.

When an emergency restart is required, the inhibition of thermal curve during start-up will be active, even if this function is not used during a start-up in normal operation.

1.4.2.5 User programmable curve for thermal over load protection

For information on how to program a customized thermal over load curve and send and extract curves to and from the relay, refer to the document *Px4x/EN UPCT/A11*.

Note 1: If a user programmable curve is enabled in the Thermal Overload protection, the thermal state remains at 0% for as long as Ieq is less than Ith. As a consequence, the number of hot starts and cold starts should not be used.

Note 2: If Data Points rather than a Formula is used to configure a customized curve, data entered in the Time column can be in scientific format and the maximum time allowed by the tool is 1E+308.

1.5 Motor differential protection (87)

Circulating current differential protection operates on the principle that current entering and leaving a zone of protection will be equal. Any difference between these currents is indicative of a fault being present in the zone. If CTs are connected as shown in Figure 11 it can be seen that current flowing through the zone of protection will cause current to circulate around the secondary wiring. If the CTs are of the same ratio and have identical magnetizing characteristics they will produce identical secondary currents and hence zero current will flow through the relay.

If a fault exists within the zone of protection there will be a difference between the output from each CT; this difference flows through the relay causing it to operate.

OP

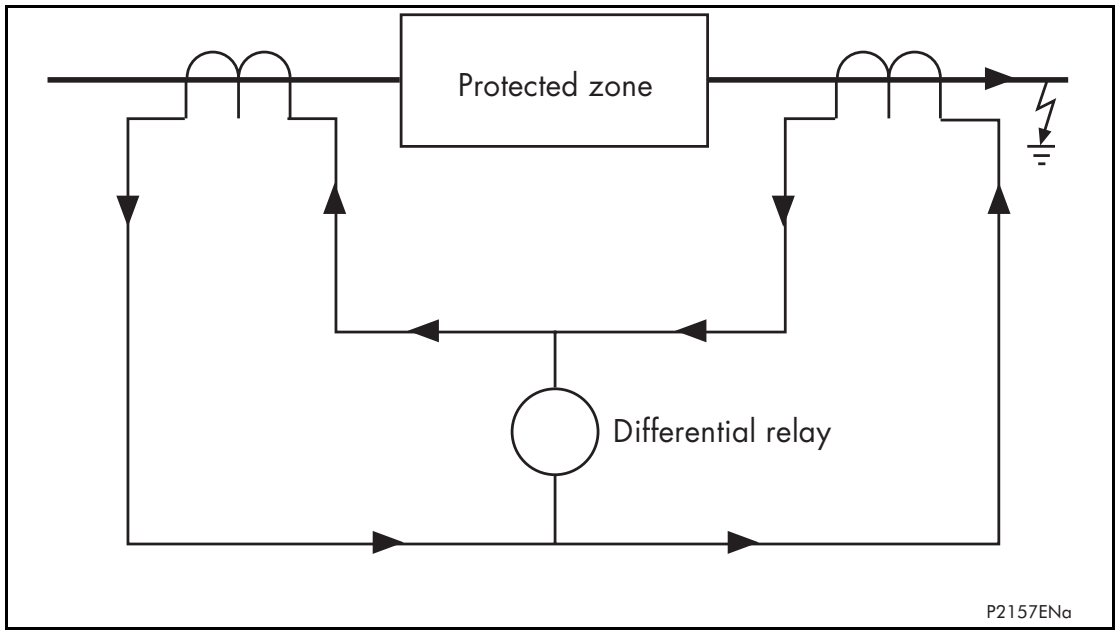

Figure 11: Principle of circulating current differential protection

Heavy through current, arising from an external fault condition can cause one CT to saturate more than the other, resulting in a difference between the secondary current produced by each CT. It is essential to stabilize the protection for these conditions. Two methods are commonly used. A biasing technique, where the relay setting is raised as through current increases or a high impedance technique, where the relay impedance is such that under maximum through fault conditions the current in the differential element is insufficient for the relay to operate.

The motor differential protection function available in the P243 relay can be used in either biased differential or high impedance differential mode. Both modes of operation are equally valid; users may have a preference for one over the other. The operating principle of each is described in the following sections.

A DDB (Digital Data Bus) signal is available to indicate the tripping of each phase of differential protection (Diff Trip A/B/C: DDB 315, DDB 316, DDB 317).

In addition a three phase trip DDB signal is provided (Trip Diff: DDB 318). These signals are used to operate the output relays and trigger the disturbance recorder as programmed into the programmable Scheme Logic (PSL). The state of the DDB signals can also be programmed to be viewed in the **Monitor Bit x** cells of the **COMMISSION TESTS** column in the relay.

The motor differential protection operation is shown in the following diagram:

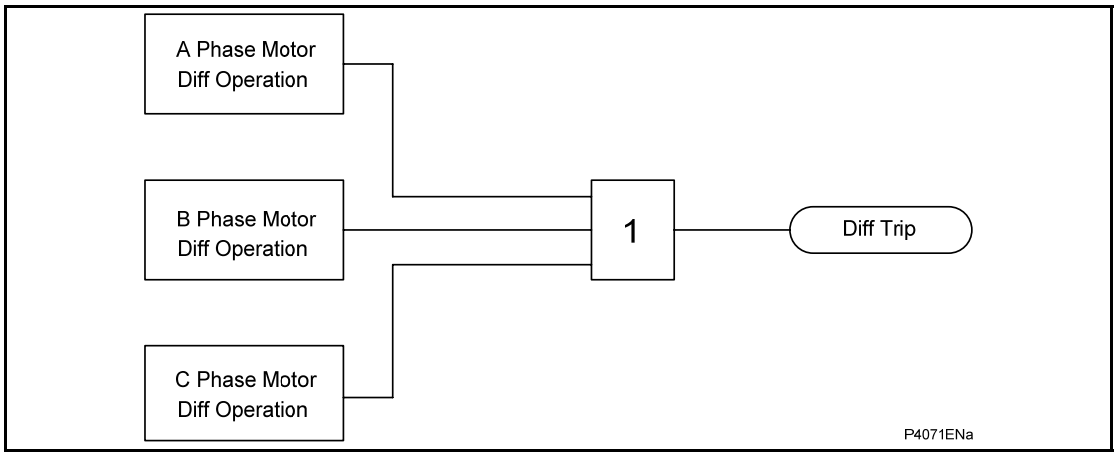

Figure 12: Motor differential logic diagram

OP

1.5.1 Biased differential protection

In a biased differential relay, the through current is used to increase the setting of the differential element. For heavy through faults, it is unlikely that the CT output at each zone end will be identical. This is due to the effects of CT saturation. In this case a differential current can be produced. However, the biasing will increase the relay setting, such that the differential spill current is insufficient to operate the relay.

A dual slope percentage bias characteristic is implemented in the P24x. The lower slope provides sensitivity for internal faults, whereas the higher slope provides stability under through fault conditions, during which there may be transient differential currents due to saturation effect of the motor CTs.

The through current is calculated as the average of the scalar sum of the current entering and leaving the zone of protection. This calculated through current is then used to apply a percentage bias to increase the differential setting. The percentage bias can be varied to give the operating characteristic shown in Figure 13.

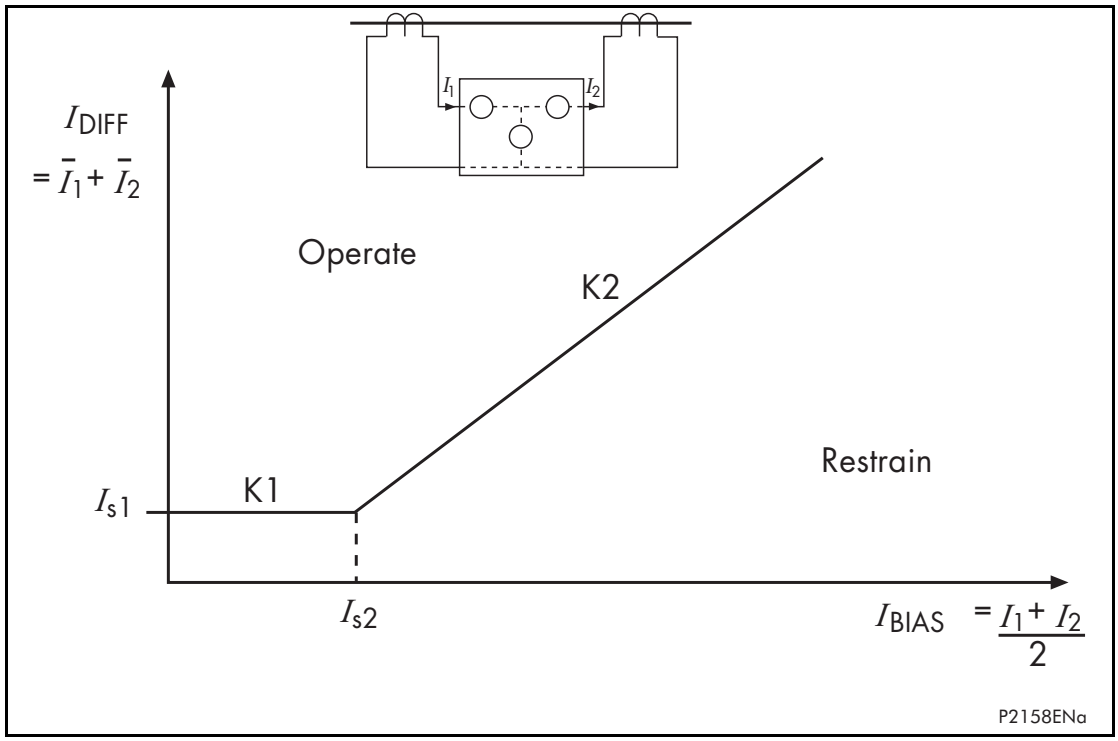

Figure 13: Biased differential protection operating characteristic

Two bias settings are provided in the P243 relay. The initial bias slope, **Diff k1**, is applied for through currents up to **Diff Is2**. The second bias slope, **Diff k2**, is applied for through currents above the **Diff Is2** setting.

The Biased differential protection function uses the two sets of three-phase current measurement inputs (IA, IB, IC, IA2, IB2, IC2), connected to measure the phase current at the neutral end and terminals of the machine, as shown in Figure 13. The bias and differential currents are calculated by the relay software, providing a phase segregated differential protection function, and may be viewed in the **MEASUREMENTS 1** column in the relay menu.

1.5.1.1 Differential and bias current calculation

The calculation is performed on a per phase basis. The differential current is the vector sum of the phase currents measured at either end of the generator. The mean bias current (Ibias) is the scalar mean of the magnitude of these currents, that is,

$$I_{a-diff} = \left| \overline{I_{a-1}} + \overline{I_{a-2}} \right|$$
$$I_{b-diff} = \left| \overline{I_{b-1}} + \overline{I_{b-2}} \right|$$
$$I_{c-diff} = \left| \overline{I_{c-1}} + \overline{I_{c-2}} \right|$$
$$I_{a-bias} = \frac{\left|\overline{I_{a-1}}\right| + \left|\overline{I_{a-2}}\right|}{2}$$
$$I_{b-bias} = \frac{\left|\overline{I_{b-1}}\right| + \left|\overline{I_{b-2}}\right|}{2}$$
$$I_{c-bias} = \frac{\left|\overline{I_{c-1}}\right| + \left|\overline{I_{c-2}}\right|}{2}$$

To provide further stability for external faults, a number of additional measures are taken on the bias calculations:

OP

1.5.1.1.1 Delayed bias

The bias quantity used is the maximum of the bias quantities calculated within the last cycle. This is to maintain the bias level, thus providing stability, during the time when an external fault is cleared. This feature is implemented on a per phase basis. The algorithm is expressed as follows; the function is executed 4 times per cycle:

Ia-bias(n) = Maximum [Ia-bias(n), Ia-bias(n-1), ..., Ia-bias(n - 3)]

Ib-bias(n) = Maximum [Ib-bias(n), Ib-bias(n-1),....., Ib-bias(n - 3)]

Ic-bias(n) = Maximum [Ic-bias(n), Ic-bias(n-1), ..., Ic-bias(n - 3)]

1.5.1.1.2 Transient bias

An additional bias quantity is introduced into the bias calculation, on a per phase basis, if there is a sudden increase in the mean-bias measurement. This quantity decays exponentially afterwards. The transient bias is reset to zero once the relay has tripped or if the mean-bias quantity is below the Is1 setting. The transient bias is used to make the protection stable for external faults and allows for the time delay in CT saturation caused by small external fault currents and high X/R ratios. For single-end or double-end fed faults the differential current will be dominant and the transient bias will have no effect.

The transient bias is removed after the relay has tripped to avoid the possibility of chattering. It is also removed when Ibias is less than Is1 to avoid the possibility of residual values due to the numerical effects.

1.5.1.1.3 Maximum bias

The bias quantity used per phase for the percentage bias characteristic is the maximum bias current calculated from all three phases, i.e.,

I-bias-max = Maximum [Ia-bias, Ib-bias, Ic-bias]

1.5.1.1.4 Tripping criteria

The tripping criteria per phase are formulated as follows. The differential threshold changes according to the value of I-bias-max, as in the percentage bias characteristic.

Note: The transient bias is on a per phase basis and is not be affected by the K1 or K2 setting.

For I-bias-max <= Is2

Idiff > K1*I-bias-max + Transient_bias + Is1

For I-bias-max > Is2

Idiff > K2*I-bias-max + Transient Bias - Is2*(K2-K1) + Is1

A count strategy is used so that the protection will operate slower near the boundary of operation. This approach is used to stabilize the relay under some marginal transient conditions.

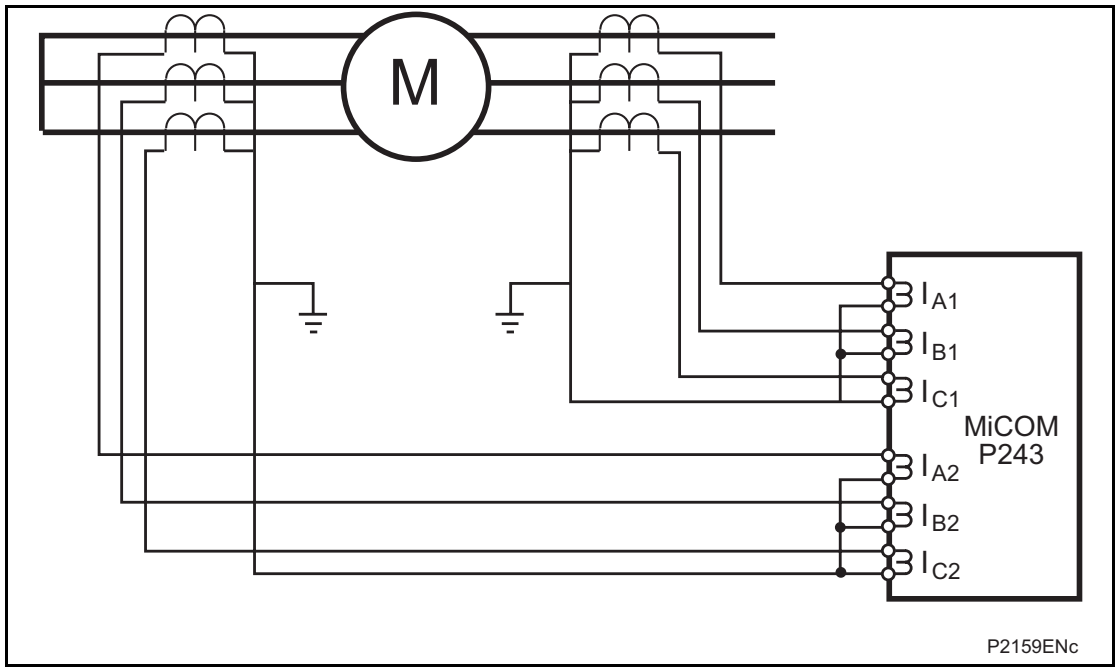

Figure 14: Relay connections for biased differential protection

1.5.2 High impedance differential protection

The high impedance principle is best explained by considering a differential scheme where one CT is saturated for an external fault, as shown in Figure 15.

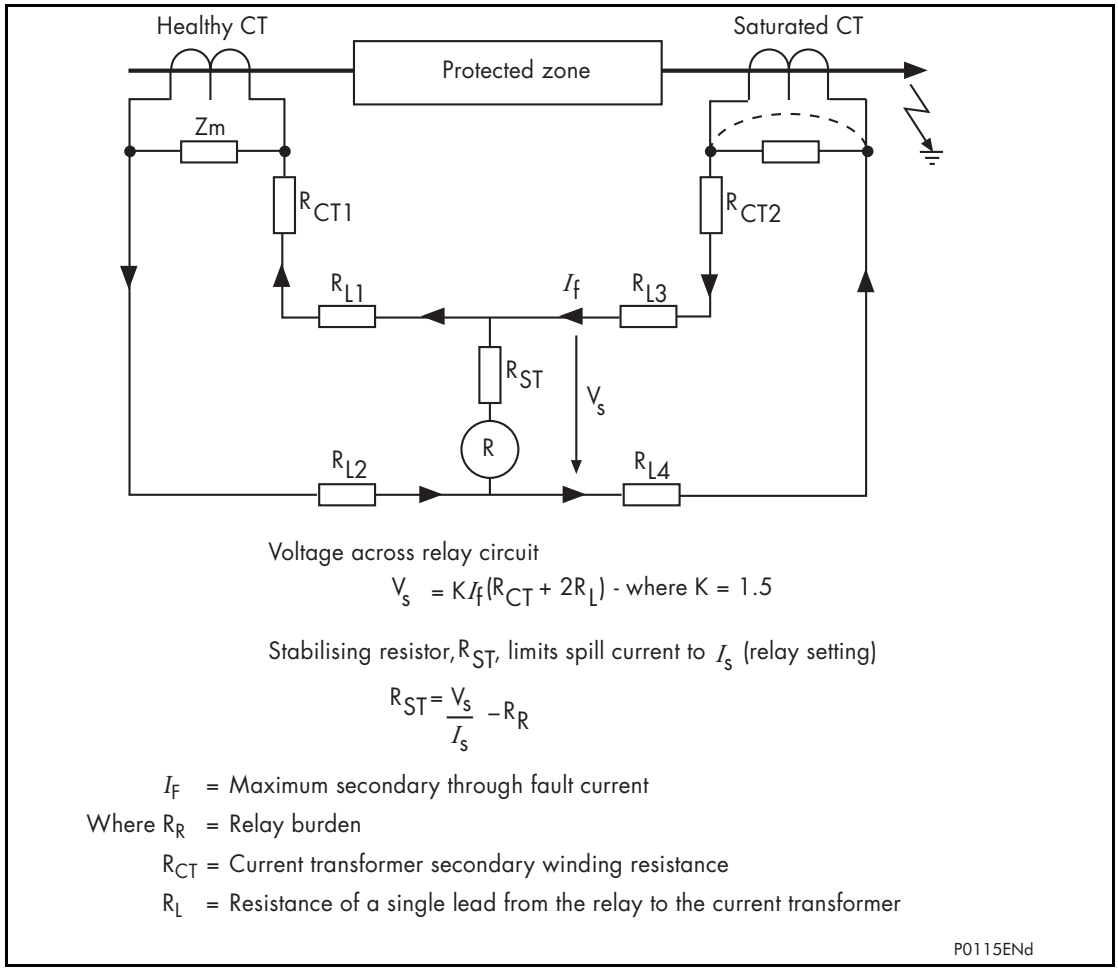

Figure 15: Principle of high impedance differential protection

If the relay circuit is considered to be very high impedance, the secondary current produced by the healthy CT will flow through the saturated CT. If the magnetizing impedance of the saturated CT is considered to be negligible, the maximum voltage across the relay circuit will be equal to the secondary fault current multiplied by the connected impedance, (R_{L3} + R_{L4} + R_{CT2}).

The relay can be made stable for this maximum applied voltage by increasing the overall impedance of the relay circuit, such that the resulting current through the relay is less than its current setting. As the impedance of the relay input alone is relatively low, a series connected external resistor is required. The value of this resistor, R_{ST}, is calculated by the formula shown in Figure 15. An additional non-linear resistor, Metrosil, may be required to limit the peak secondary circuit voltage during internal fault conditions.

To ensure that the protection will operate quickly during an internal fault the CTs used to operate the protection must have a knee point voltage of at least 2 Vs.

The high impedance differential protection function uses the IA2, IB2, IC2 current inputs connected to measure the differential current in each phase, as shown in Figure 16.

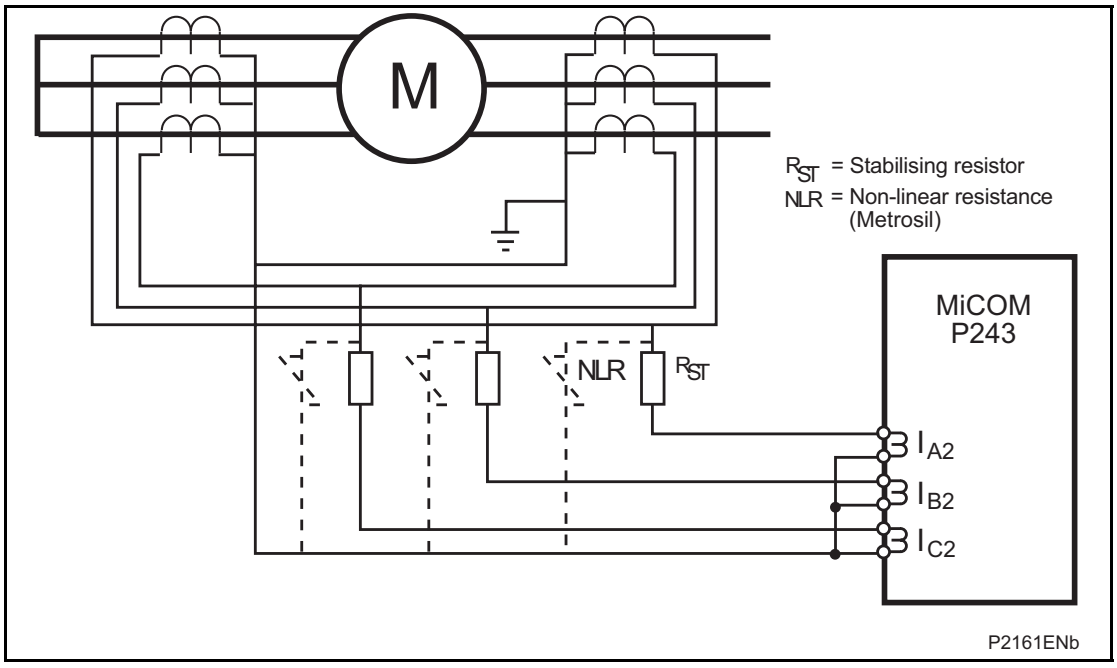

Figure 16: Relay connections for high impedance differential protection

1.5.3 Self balance winding differential

An alternative is to use self balance type differential protection arrangement, as shown in Figure 17, using the IA2, IB2, IC2 set of CTs

For this configuration, the relay must be set to **High Impedance** via the cell **Diff Function** in the **Differential** protection menu

If the conductors are placed reasonably concentric within the window of the core balance current transformers, spill current can be kept to a minimum. With this low spill current and a reasonably independence of CT ratio to full load a lower fault setting could be achieved than conventional high impedance circulating current differential schemes.

Disadvantages :

1. The necessity of passing both ends of each phase winding through the CT and hence the need for extra cabling on the neutral end.
2. To avoid long cabling, position of CTs are restricted to the proximity of the machine output terminals in which case the cable between the machine output terminals and controlling switchgear might not be included within the differential zone.

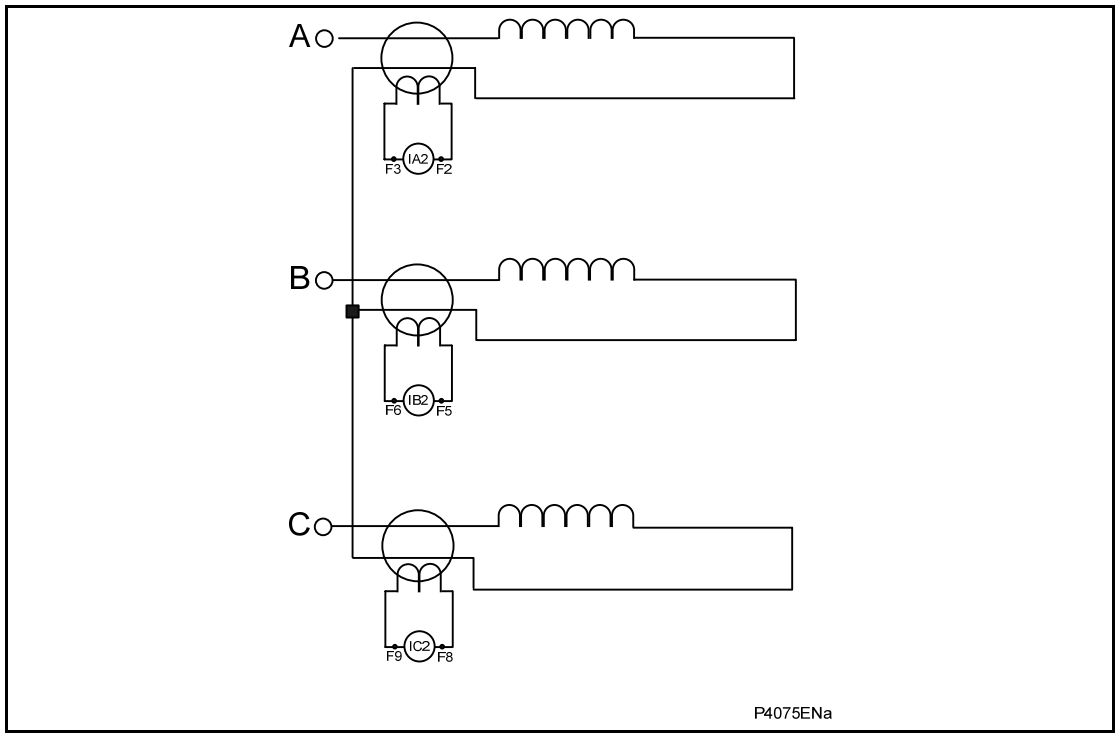

Figure 17: Self-balance winding differential protection

1.6 Short circuit protection (50/51)

The overcurrent protection included in the P24x relays provides four-stage non-directional three-phase overcurrent protection with independent time delay characteristics. All overcurrent settings apply to all three phases but are independent for each of the four stages.

The first two stages of overcurrent protection have time-delayed characteristics which are selectable between inverse definite minimum time (IDMT), or definite time (DT). The third and fourth stages have definite time characteristics only.

In order to avoid tripping during start-up as a result of asymmetric CT saturation, definite time element has a minimum operating time of 100 ms for currents in the range I> to 1.2I>.

The definite time characteristic is shown below in Figure 18.

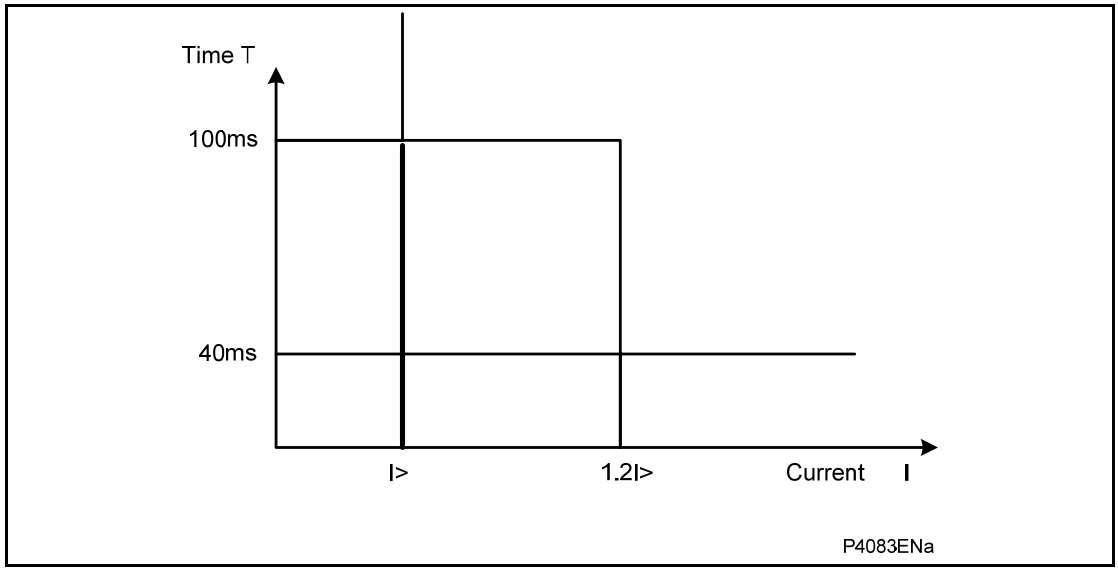

Figure 18: Definite time overcurrent element

Various methods are available to achieve correct relay co-ordination on a system; by means of time alone, current alone or a combination of both time and current. Grading by means of current is only possible where there is an appreciable difference in fault level between the two relay locations. Grading by time is used by some utilities but can often lead to excessive fault clearance times at or near source substations where the fault level is highest. For these reasons the most commonly applied characteristic in coordinating overcurrent relays is the IDMT type.

The inverse time delayed characteristics indicated above, comply with the following formula:

IEC curves IEEE curves User Curves

$$t = Tx\left(\frac{\beta}{\left(M^{\alpha}-1\right)}+L\right)+C \quad \text{or} \quad t = TD/7x\left(\frac{\beta}{\left(M^{\alpha}-1\right)}+L\right) \quad t = \left(TD/7\right)x\,t_{ucrv}$$

Where:

t = Operation time

β = Constant

M = I/Is

K = Constant

I = Measured current

Is = Current threshold setting

α = Constant

L = ANSI/IEEE constant (zero for IEC curves)

T = Time multiplier setting for IEC curves

TD = Time dial setting for IEEE and user programmable curves

t_{ucrv} = User curve operating time

Curve description	Standard	β constant	α constant	L constant
Standard Inverse	IEC	0.14	0.02	0
Very Inverse	IEC	13.5	1	0
Extremely Inverse	IEC	80	2	0
Long Time Inverse	UK	120	1	0
Rectifier	UK	45900	5.6	0
Moderately Inverse	IEEE	0.0515	0.02	0.114
Very Inverse	IEEE	19.61	2	0.491
Extremely Inverse	IEEE	28.2	2	0.1217
Inverse	US	5.95	2	0.18
Short Time Inverse	US	0.16758	0.02	0.11858

Table 1: Standard IDMT curves and their corresponding coeficients

The IEEE, US curves and User Curves are set differently to the IEC/UK curves, with regard to the time setting. A time multiplier setting (TMS) is used to adjust the operating time of the IEC curves, whereas a time dial setting is employed for the IEEE/US/User curves. The menu is arranged such that if an IEC/UK curve is selected, the I> Time Dial cell is not visible and vice versa for the TMS setting.

Note: The IEC/UK inverse characteristics can be used with a definite time reset characteristic, however, the IEEE/US/User curves may have an inverse or definite time reset characteristic. The following equation can be used to calculate the inverse reset time for IEEE/US/User curves:

$$tRESET = \frac{TD/7 \times S}{\left(1 - M^2\right)} \text{ in seconds}$$

Where:

TD = Time dial setting for IEEE and user programmable curves

S = Constant

M = I/Is

Curve description	Standard	S constant
Moderately Inverse	IEEE	4.85
Very Inverse	IEEE	21.6
Extremely Inverse	IEEE	29.1
Inverse	US	5.95
Short Time Inverse	US	2.261

Table 2: IEEE and US reset curve "S" coefficient values

And for User Programmable curve tRESET = t = TD x t_{ucrv}

1.6.1 RI curve

The RI curve (electromechanical) has been included in the first and second stage characteristic setting options for phase overcurrent and earth protections. The curve is represented by the following equation.

$$t = K \times \left(\frac{1}{0.339 - \left({}^{0.236}/_{M} \right)} \right) \text{ in seconds}$$

With K adjustable from 0.1 to 10 in steps of 0.05

M = I / Is

1.6.2 Timer hold facility

The first two stages of overcurrent protection in the P24x relay are provided with a timer hold facility, which may either be set to zero or to a definite time value

Note: If an IEEE/US operate curve is selected, the reset characteristic may be set to either definite or inverse time in cell **I>1 Reset Char**; otherwise this setting cell is not visible in the menu.

Setting of the timer to zero means that the overcurrent timer for that stage will reset instantaneously once the current falls below 95% of the current setting. Setting of the hold timer to a value other than zero, delays the resetting of the protection element timers for this period. This may be useful in certain applications, for example when grading with upstream electromechanical overcurrent relays which have inherent reset time delays.

Another situation where the timer hold facility may be used to reduce fault clearance times is where intermittent faults may be experienced. An example of this may occur in a plastic insulated cable. In this application it is possible that the fault energy melts and reseals the cable insulation, therefore extinguishing the fault. This process repeats to give a succession of fault current pulses, each of increasing duration with reducing intervals between the pulses, until the fault becomes permanent.

When the reset time of the overcurrent relay is instantaneous, the relay will be repeatedly reset and not be able to trip until the fault becomes permanent. By using the Timer Hold facility the relay will integrate the fault current pulses, thereby reducing fault clearance time.

The timer hold facility can be found for the first and second overcurrent stages as settings **I>1 tRESET** and **I>2 tRESET**, respectively.

Note: This cell is not visible for the IEEE/US curves if an inverse time reset characteristic has been selected, as the reset time is then determined by the programmed time dial setting.

The functional logic diagram for non-directional overcurrent is shown in Figure 19. The overcurrent block is a level detector that detects that the current magnitude is above the threshold. It provides a start and also initiates the IDMT/DT characteristic depending on the setting.

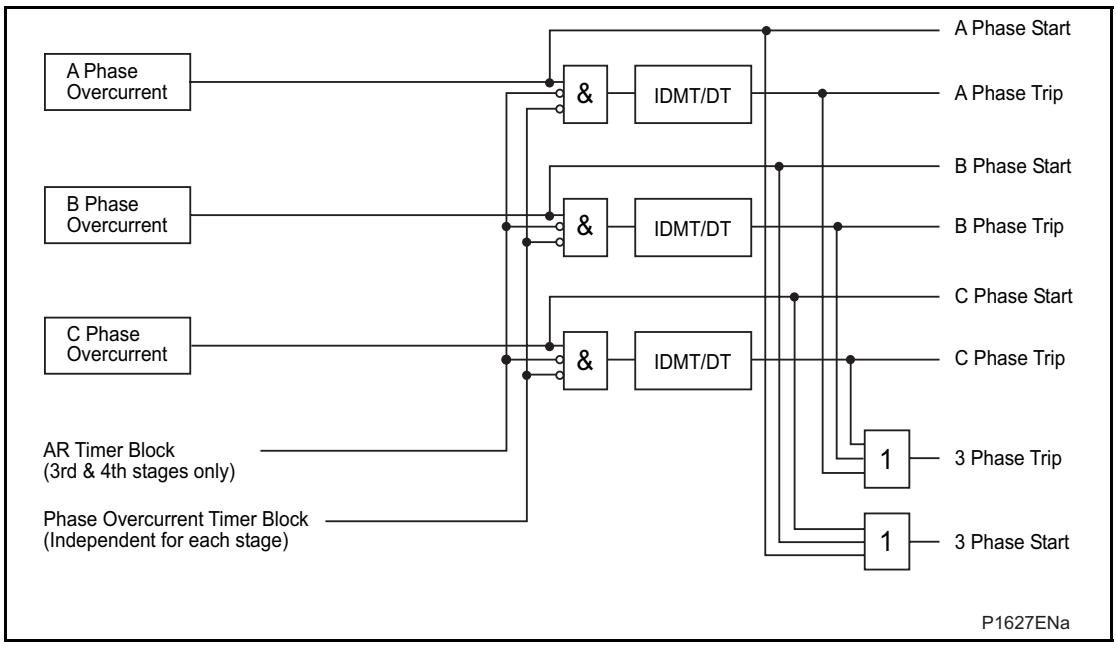

Figure 19: Non-directional overcurrent logic diagram

A timer block input is available for each stage which will reset the overcurrent timers of all three phases if energized, taking account of the reset time delay if selected for the **I>1** and **I>2** stages.

Note: The short circuit element will act even if the current input signals are saturated

A DDB (Digital Data Bus) signal is available to indicate the start and trip of each phase of the short circuit protection stages (Start I>1/2/3/4 A,B,C: DDB 242,243,244/DDB 253,254,255/DDB 343,344,345/DDB 354,355,356 Trip I>1/2/3/4 A,B,C: DDB 245,246,247/ DDB 256,257,258/DDB 346,347,348/DDB 357,358,359). In addition a three phase start and trip DDB signal is provided (Start I>1/2/3/4: DDB 241/252/342/353 Trip I>1/2/3/4: DDB237/ 248/338/349). These signals are used to operate the output relays and trigger the disturbance recorder as programmed into the programmable Scheme Logic (PSL). The state of the DDB signals can also be programmed to be viewed in the **Monitor Bit x** cells of the **COMMISSION TESTS** column in the relay.

1.6.3 User programmable overcurrent protection

A user programmable overcurrent curve facility is available for the first and second stages of short circuit protection. For information on how to program a customized overcurrent curve and send and extract curves to and from the relay, refer to the document *Px4x/EN UPCT/A11*.

1.7 Negative sequence overcurrent protection (NPS) (46)

The P24x relays provide two independent stages of negative phase sequence overcurrent protection. Stage 1 has a current pick up setting **I2>1 Current Set**, and is time delayed in operation by the adjustable timer **I2>1 Time Delay**. Stage 2 has a current pick up setting **I2>2 Current Set** and is time delayed in operation by a Time Multiplier Setting **I2>2 TMS**.

The second stage element monitors the negative phase sequence current and trip according to an inverse characteristic as follows:

$T = TMS \times (1.2/(I_2/I_n))$ for $0.2 \leq I_2/I_n \leq 2$

$T = TMS*0.6$ for $I_2/I_n > 2$

A DDB (Digital Data Bus) signal is available to indicate the trip of the negative phase sequence overcurrent protection stages (Trip I2>1/2: DDB274, 275). These signals are used to operate the output relays and trigger the disturbance recorder as programmed into the programmable Scheme Logic (PSL). The state of the DDB signals can also be programmed to be viewed in the **Monitor Bit x** cells of the **COMMISSION TESTS** column in the relay.

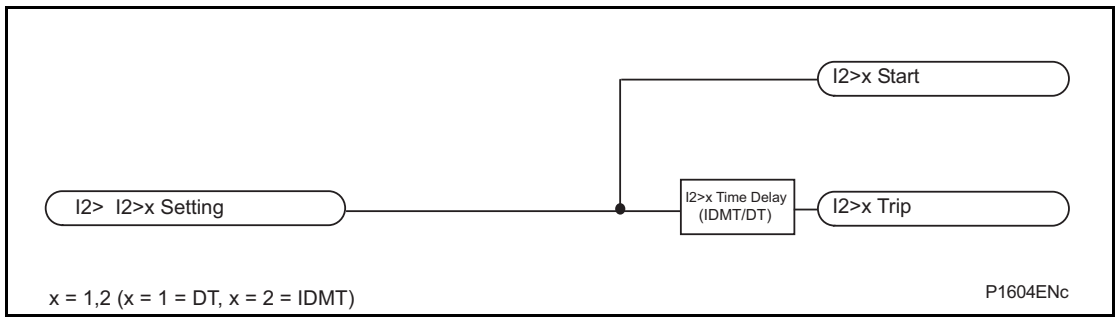

Figure 20: Negative sequence overcurrent logic diagram

1.8 Voltage elements (27/59/59N)

1.8.1 Undervoltage protection (27)

Both the under and overvoltage protection functions can be found in the relay menu **Volt Protection**. The undervoltage protection included within the P24x relays consists of two independent stages.

Stage 1 may be selected as IDMT, DT or Disabled, within the **V<1 Function** cell. Stage 2 is DT only and is enabled/disabled in the **V<2 Status** cell.

The IDMT characteristic available on the first stage is defined by the following formula:

$t = K / (M - 1)$

Where:

K = Time multiplier setting

t = Operating time in seconds

M = Measured voltage/relay setting voltage (V< Voltage Set)

Two stages are included to provide both alarm and trip stages, where required. Alternatively, different time settings may be required depending upon the severity of the voltage dip, i.e. motor loads will be able to withstand a small voltage depression for a longer time than if a major voltage excursion were to occur.

Note: The Undervoltage protection will be blocked if the Circuit breaker is open. Therefore the 52a breaker status (CB Closed 3ph - DDB 105) must be mapped in the PSL for the Undervoltage protection to operate.

The undervoltage fault protection starts are mapped internally to the ANY START DDB signal – DDB 369.

OP

A DDB (Digital Data Bus) signal is available to indicate the trip of each phase-phase of the undervoltage protection stages (Trip V<1/2 AB/BC/CA: DDB 276-278, 284-286). In addition a three phase trip DDB signal is provided (Trip V<1/2: DDB 279, 287). These signals are used to operate the output relays and trigger the disturbance recorder as programmed into the programmable Scheme Logic (PSL). The state of the DDB signals can also be programmed to be viewed in the **Monitor Bit x** cells of the **COMMISSION TESTS** column in the relay.

The logic diagram of the undervoltage function is shown in Figure 21.

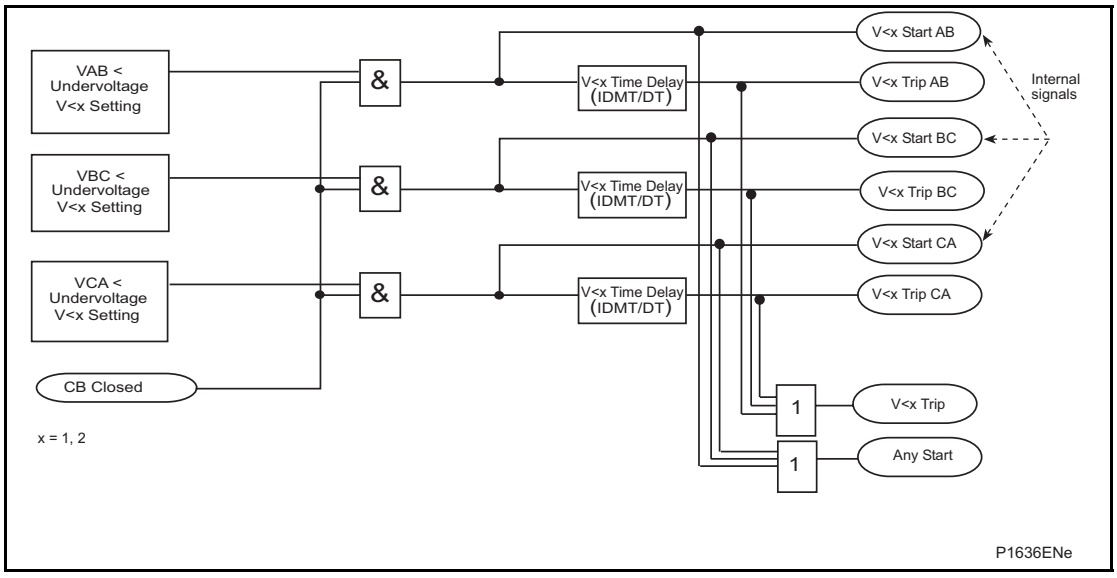

Figure 21: Undervoltage - single and three phase tripping mode (single stage)

1.8.2 Overvoltage protection (59)

The overvoltage protection included within the P24x relays consists of two independent stages

Stage 1 and 2 may be selected as DT or Disabled, within the **V>1/2 Status** cell. The IDMT characteristic available on the first stage is defined by the following formula:

t = K / (M – 1)

Where:

K = Time multiplier setting

t = Operating time in seconds

M = Measured voltage / relay setting voltage (V> Voltage Set)

The overvoltage fault protection starts are mapped internally to the ANY START DDB signal – DDB 369.

A DDB (Digital Data Bus) signal is available to indicate the trip of each phase-phase of the overvoltage protection stages (Trip V>1/2 AB/BC/CA: DDB 280-282, 288-290). In addition a three phase trip DDB signal is provided (Trip V>1/2: DDB 283, 291). These signals are used to operate the output relays and trigger the disturbance recorder as programmed into the programmable Scheme Logic (PSL). The state of the DDB signals can also be programmed to be viewed in the **Monitor Bit x** cells of the **COMMISSION TESTS** column in the relay.

The logic diagram of the overvoltage function is shown in Figure 22.

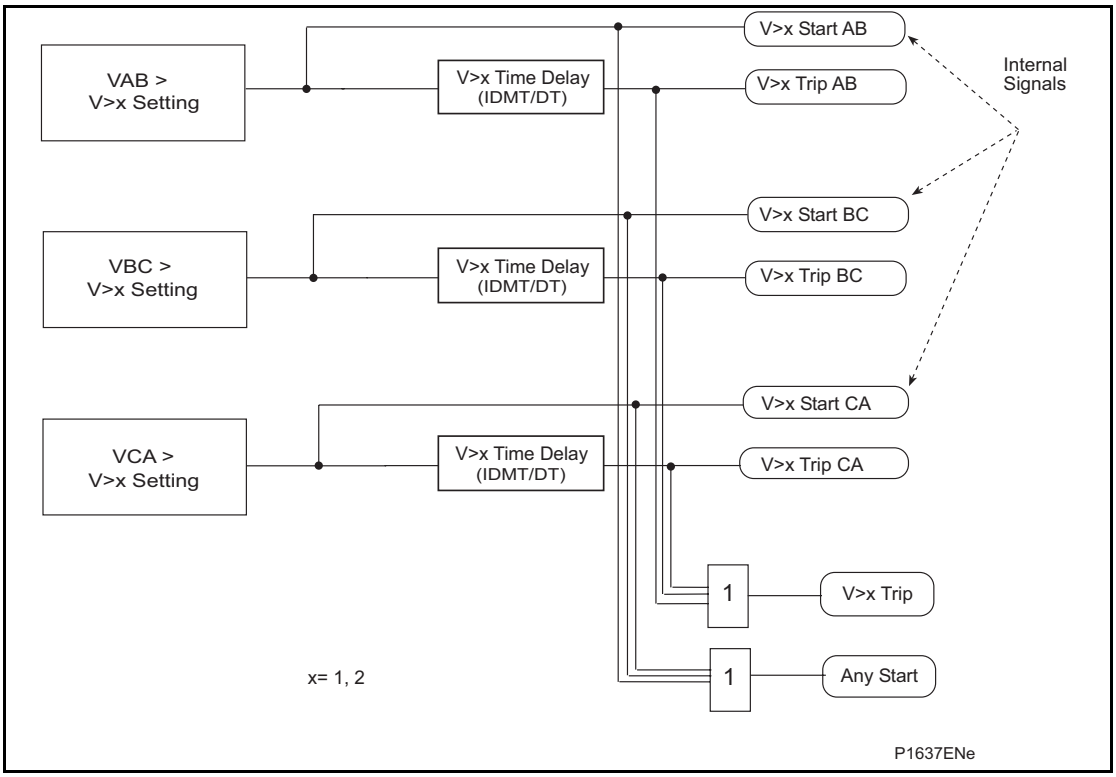

Figure 22: Overvoltage - single and three phase tripping mode (single stage)

1.8.3 3 Phase voltage checking (47/27)

The input voltage rotation and magnitude are monitored to determine both correct phase rotation and sufficient supply voltage, prior to permitting motor starting.

For a good starting condition, the positive sequence voltage (V1) should be greater than the negative sequence voltage (V2) and the phase voltages VA and VB and VC should be greater than the user settable threshold (V s).

The result of this function may be used into the programmable scheme logic in order to inhibit the start of the motor if the voltage is not sufficient (3Ph Volt Alarm: DDB177).

This feature requires a 52a circuit breaker auxiliary contact mapped to an opto input to get the information CB closed/CB open.

1.8.4 Residual overvoltage / NVD protection (59N)

The neutral voltage displacement protection function of the P24x relays consist of two stages of measured (VN>1, VN>2) neutral overvoltage protection. Stage one can be set as Definite Time (DT) or Inverse Definite Minimum Time (IDMT).

The operation of this function depends on the parameter **VT connecting mode**: If this is set to **2 VT + Residual**, then the function uses the residual voltage measured from the connected residual voltage input.

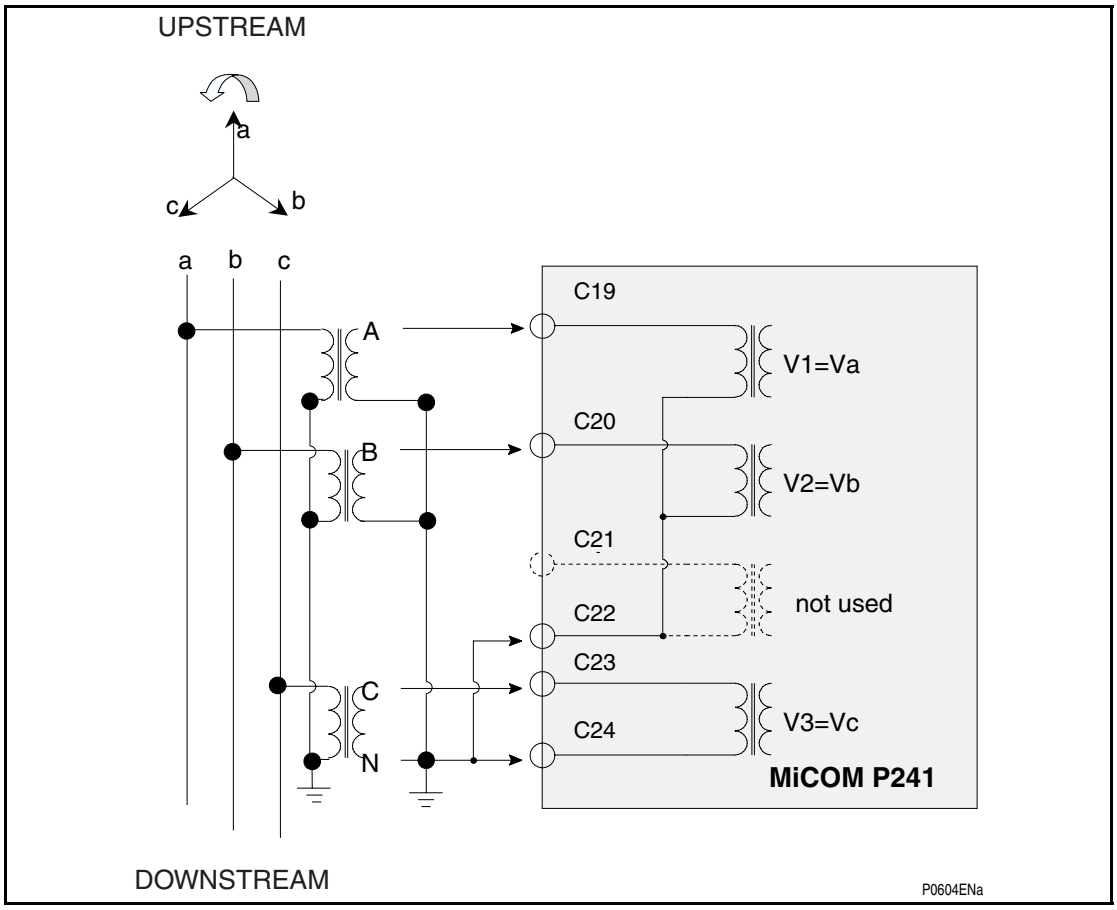

Figure 23: 3 VTS configuration

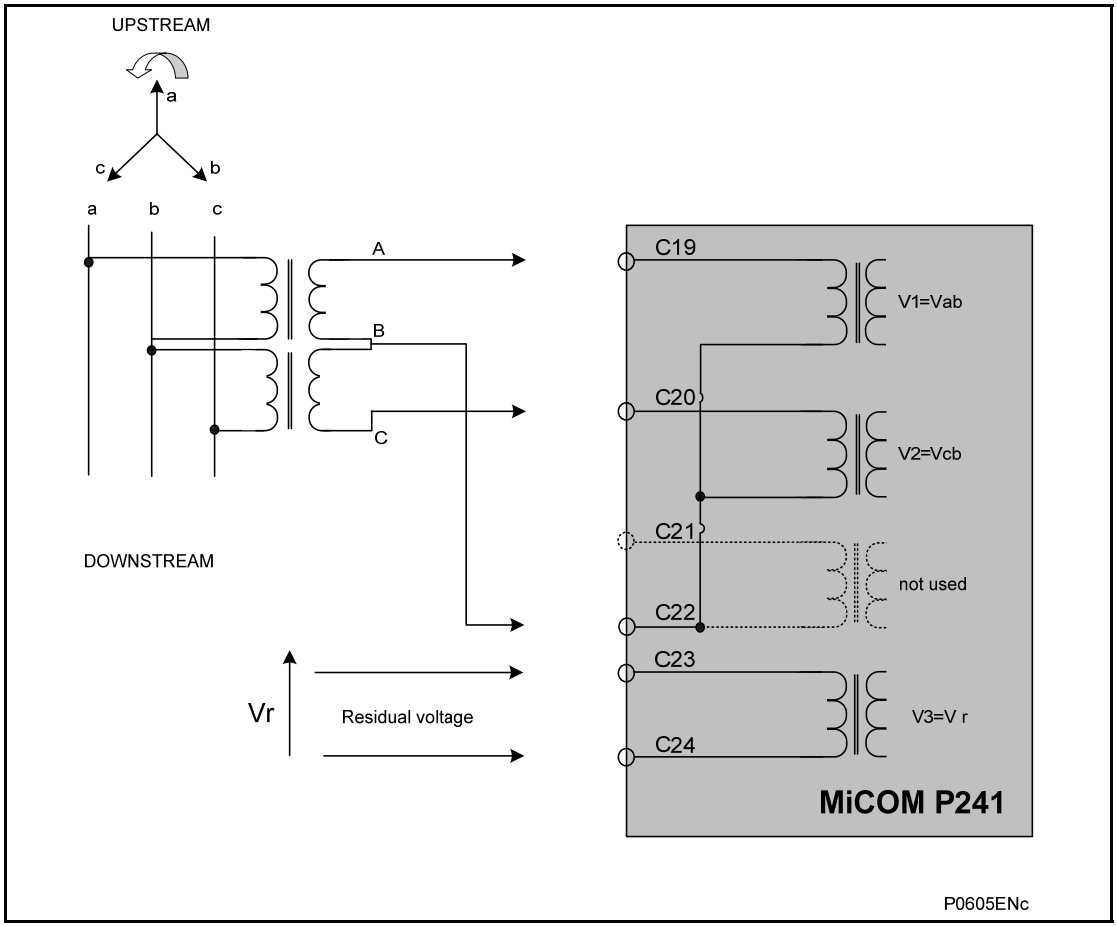

Figure 24: Alternative relay connections for residual overvoltage/NVD protection

The functional block diagram of the first stage residual overvoltage is shown below:

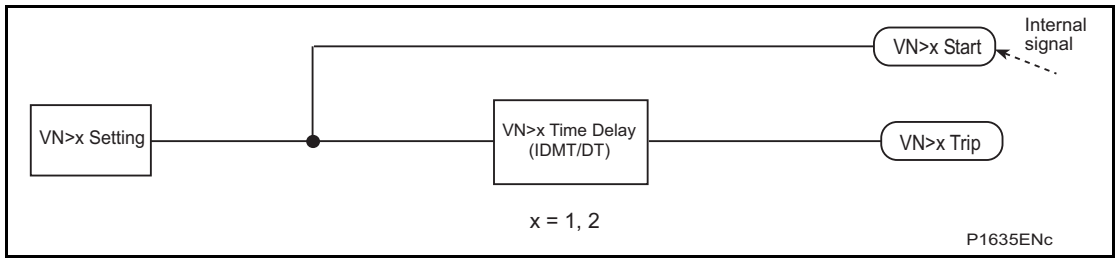

Figure 25: Residual overvoltage logic (single stage)

The residual overvoltage fault protection starts are mapped internally to the ANY START DDB signal – DDB 369.

A DDB (Digital Data Bus) signal is available to indicate the trip of each of the neutral voltage protection stages (Trip NVD VN>1/2: DDB 292, 293). These signals are used to operate the output relays and trigger the disturbance recorder as programmed into the programmable Scheme Logic (PSL). The state of the DDB signals can also be programmed to be viewed in the **Monitor Bit x** cells of the **COMMISSION TESTS** column in the relay.

The IDMT characteristic available on the first stage is defined by the following formula:

t = K / (M – 1)

Where:

K = Time Multiplier Setting (**VN>1 TMS**)

t = Operating Time in Seconds

M = Measured Residual Voltage/Relay Setting Voltage (**VN>1 Voltage Set**)

OP

1.9 Underfrequency protection (81U)

The P24x relays include 2 stages of underfrequency. Stage 1 and 2 may be selected as DT or Disabled, within the **F<1/2 Status** cell.

The logic diagram for the underfrequency logic is as shown in Figure 26. Only a single stage is shown. The other stage is identical in functionality.

If the frequency is below the setting and the breaker is closed (52A input high), the DT timer is started.

This feature is only enabled when the circuit breaker is closed, therefore it requires a 52a circuit breaker auxiliary contact mapped to an opto input to get the information CB closed / CB open.

If the frequency cannot be determined (Frequency Not Found), the function is also blocked. A DDB (Digital Data Bus) signal is available to indicate the trip of each of the underfrequency protection stages (Trip F<1/2: DDB 259, 260). These signals are used to operate the output relays and trigger the disturbance recorder as programmed into the programmable Scheme Logic (PSL). The state of the DDB signals can also be programmed to be viewed in the **Monitor Bit x** cells of the **COMMISSION TESTS** column in the relay.

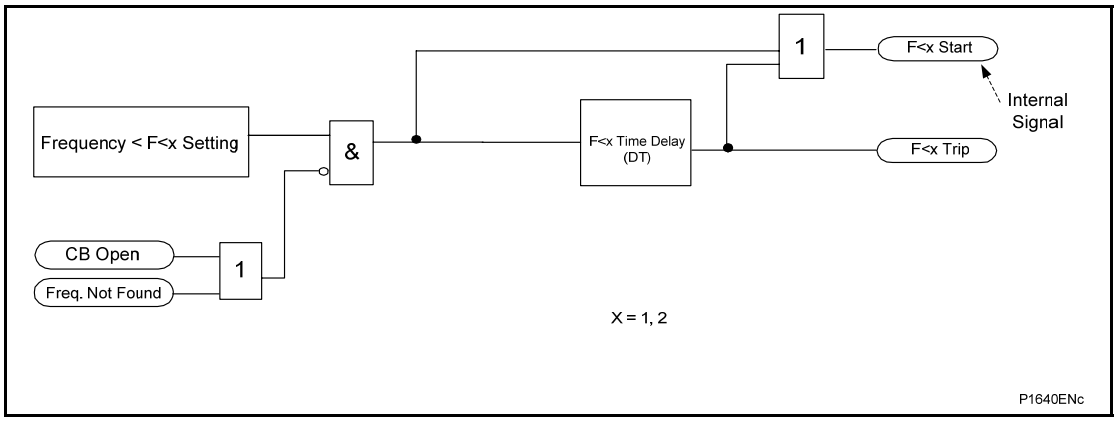

Figure 26: Underfrequency logic

1.10 Field failure protection function (40)

The field failure protection of the P24x consists of two elements, an impedance element with two time delayed stages and a power factor alarm element, illustrated below in Figure 27. The Field Failure protection impedance elements are also provided with an adjustable delay on reset (delayed drop off) timer. The elements operate from A phase current and A phase voltage signals measured by the Ia and Va inputs on the relay. The minimum phase current and voltage required for P241/2/3 field failure protection to work is 20 mA and 1 V (In = 1 A, Vn = 100/120 V) and 100 mA and 1V (In = 5 A, Vn = 100/120 V).

OP

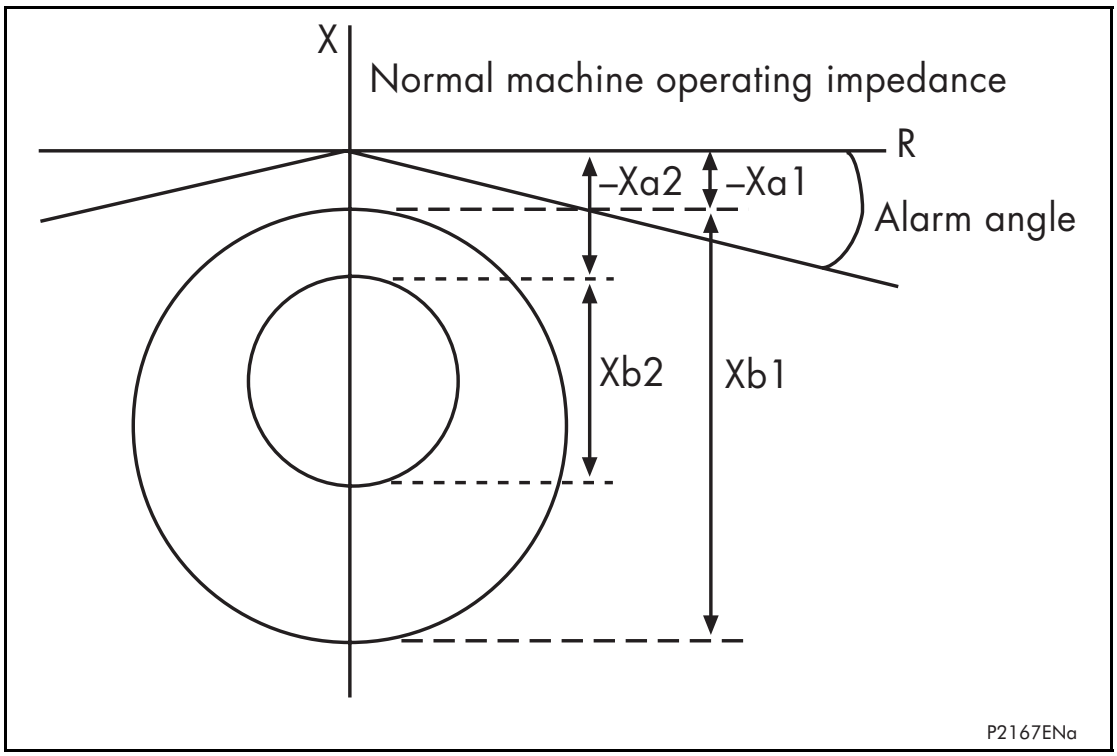

Figure 27: Field failure protection characteristics

DDB signals are available to indicate the start and tripping of each stage (FFail Start 1/2: DDB 334, DDB 335, Field Fail1/2 Trip: DDB 336, DDB 337). A further DDB **Field Fail Alarm** signal is generated from the field failure alarm stage (DDB 234). The state of the DDB signals can be programmed to be viewed in the **Monitor Bit x** cells of the **COMMISSION TESTS** column in the relay.

The field failure protection starts are mapped internally to the ANY START DDB signal – DDB 369.

The field failure protection is provided with a FFail Block signal (DDB 117) which may be used in the Programmable Scheme Logic to block the Field Failure protection.

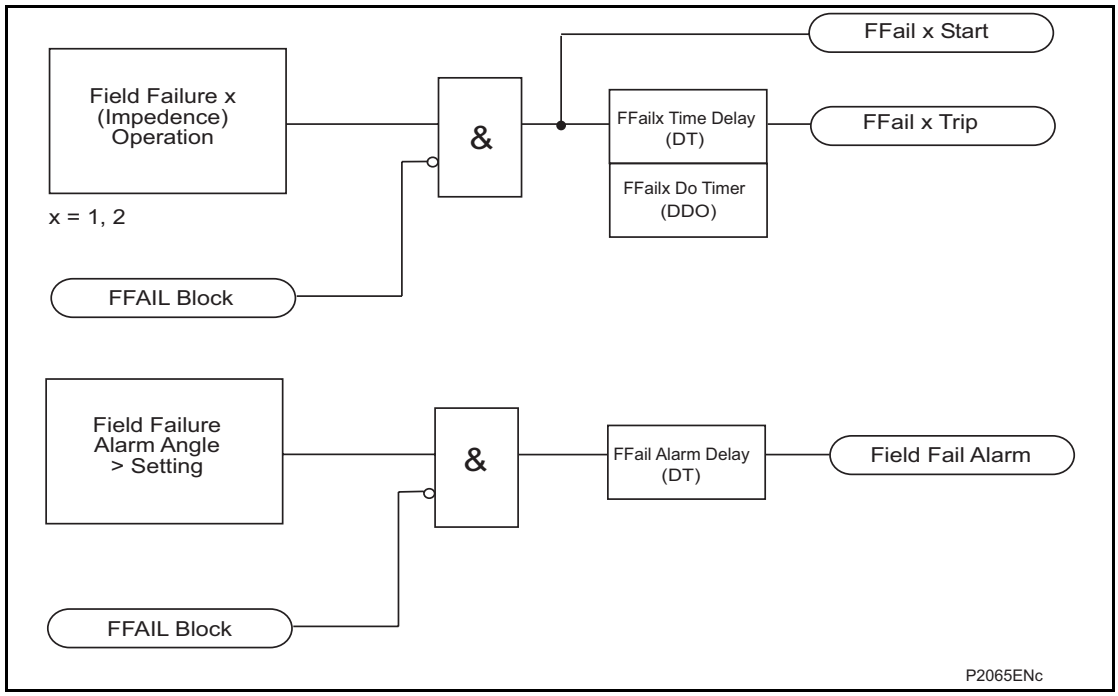

Figure 28: Field failure logic diagram

OP

1.11 Power elements (32R/37/55)

The standard power protection elements of the P24x relay calculate the three-phase active power based on the following formula, using the current measured at the Ia, Ib, Ic inputs of the relay.

$$P = Va\ Ia \cos\phi_a + Vb\ Ib \cos\phi_b + Vc\ Ic \cos\phi_c$$

1.11.1 Reverse power (32R)

When a power supply failure occurs on the feeder, synchronous motors will become generators due to the inertia of their load and the induction motors will start to work as generators.

The aim of the reverse power protection is to detect the inverse flow of energy and to ensure that the motor does not feed the fault which has appeared on the network.

The Reverse Power protection in the P24x has a single reverse power threshold **Rev P< Power Set**. If this setting is reached, the reverse power protection will trip in a time equal to the time delay setting **Rev P< Time Delay**. A drop-off time, **Rev P< Drop-of Ti** during the motor start time can be used, in order to avoid tripping orders during starts.

A DDB (Digital Data Bus) signal is available to indicate the trip of the reverse power protection (Trip Rev Power: DDB 273). These signals are used to operate the output relays and trigger the disturbance recorder as programmed into the programmable Scheme Logic (PSL). The state of the DDB signals can also be programmed to be viewed in the **Monitor Bit x** cells of the **COMMISSION TESTS** column in the relay.

This feature is only enabled when the circuit breaker is closed, therefore it requires a 52a circuit breaker auxiliary contact mapped to an opto input to get the information CB closed / CB open.

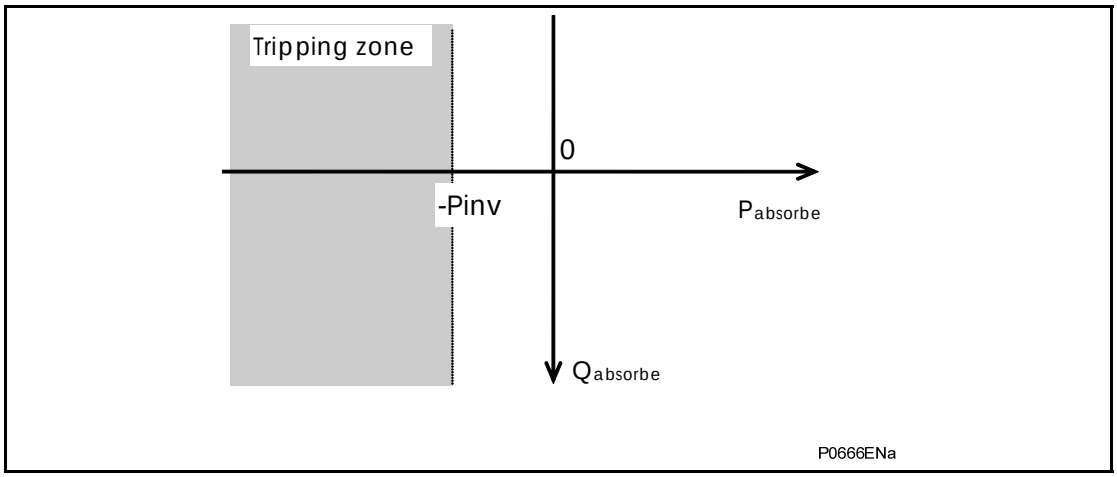

Figure 29: Reverse power protection

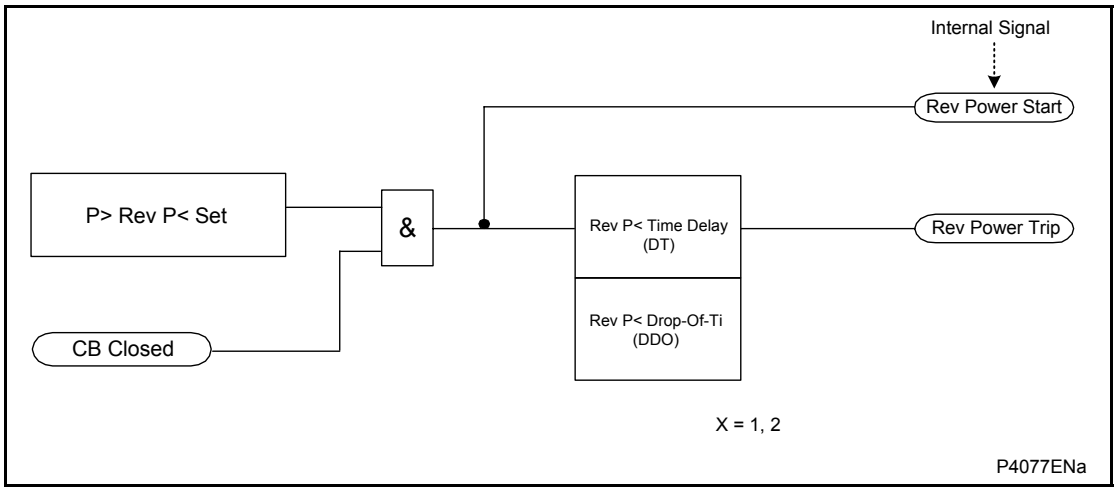

Figure 30: Reverse power logic diagram

1.11.2 Out of step protection (under power factor) (55)

1.11.2.1 Principle

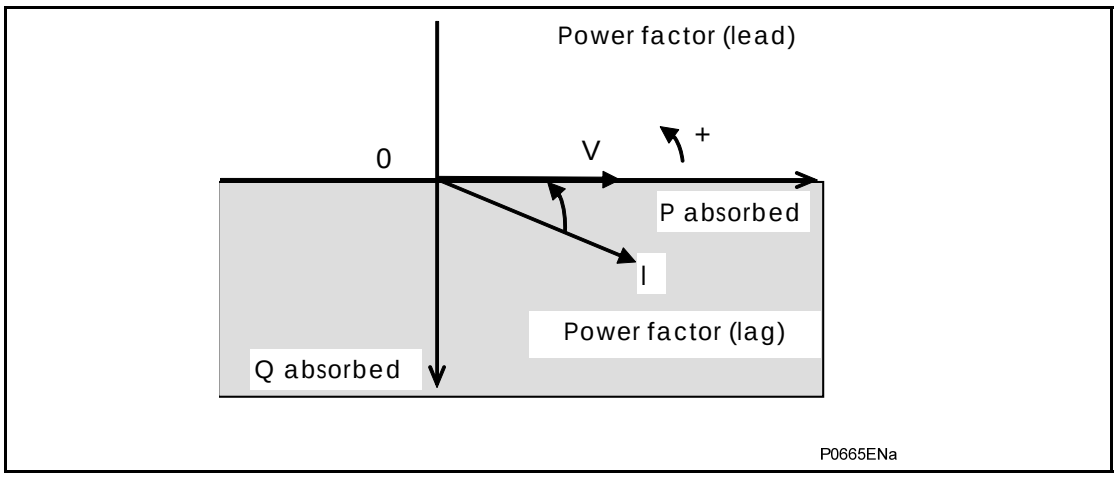

Figure 31: Out of step protection

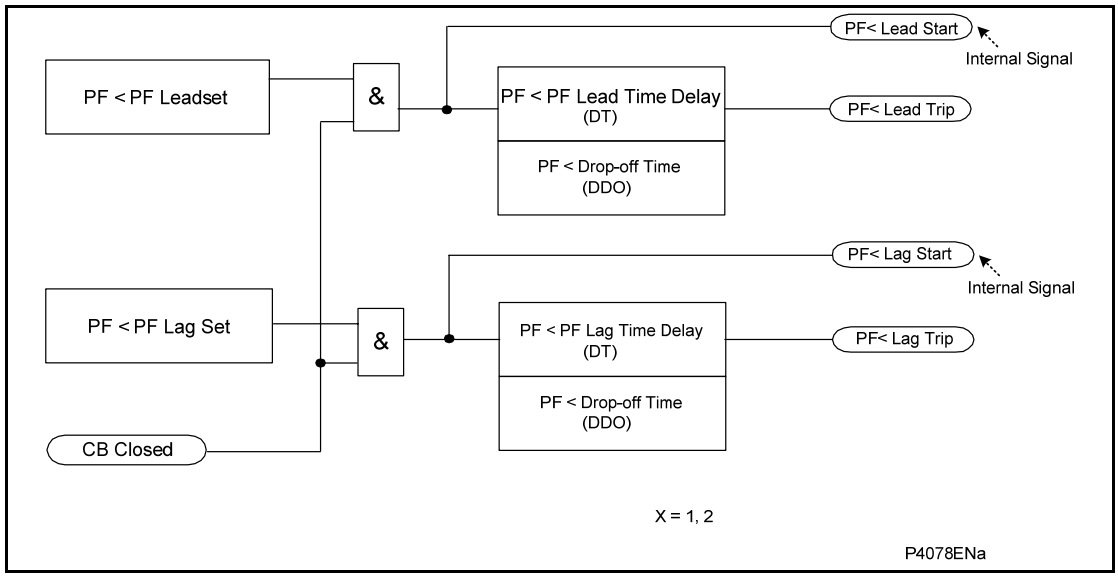

Figure 32: Out of step logic diagram

1.11.2.2 Feature description

Power factor protection is provided for out-of-step protection of synchronous machines. The 3ph power factor is taken into account: a drop-off time during the motor start time can be used, in order to avoid tripping during the motor start.

This feature is only enabled when the circuit breaker is closed, therefore it requires a 52a circuit breaker auxiliary contact mapped to an opto input to get the information CB closed / CB open.

A DDB (Digital Data Bus) signal is available to indicate the trip of each of the out of step protection stages (Trip PF<Lead/Lag: DDB 271, 272). These signals are used to operate the output relays and trigger the disturbance recorder as programmed into the programmable Scheme Logic (PSL). The state of the DDB signals can also be programmed to be viewed in the **Monitor Bit x** cells of the **COMMISSION TESTS** column in the relay.

1.11.3 Loss of load (under power) (37)

The principle of this function is the following: if the minimum 3 phase active power is less than the programmed threshold for a settable time delay, a trip will be initiated. Since rated power cannot be reached during starting, this feature can be disabled using a delay on drop off time during the motor start time.

A low forward power condition can only be established when the circuit breaker is closed and the active power calculated is above zero.

Note : As the absolute power is used for this function, it can also be used to protect against “reverse power” of some synchronous motors.

A DDB (Digital Data Bus) signal is available to indicate the trip of each of the underpower protection stages (Trip P<1/2: DDB 269, 270). These signals are used to operate the output relays and trigger the disturbance recorder as programmed into the programmable Scheme Logic (PSL). The state of the DDB signals can also be programmed to be viewed in the **Monitor Bit x** cells of the **COMMISSION TESTS** column in the relay.

This feature is only enabled when the circuit breaker is closed, therefore it requires a 52a circuit breaker auxiliary contact mapped to an opto input to get the information CB closed / CB open.

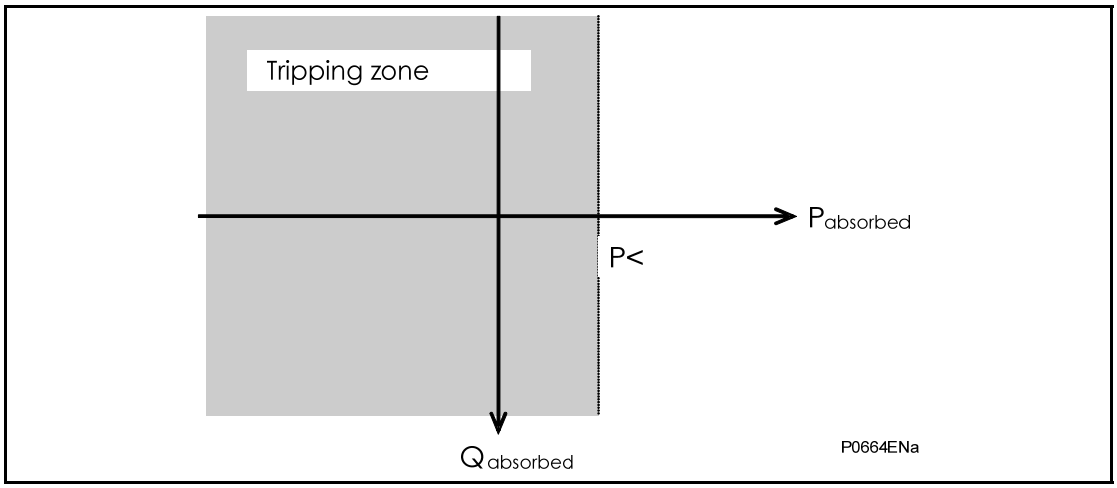

Figure 33: Loss of load (underpower) protection

Tripping conditions:

CB Closed,

Pactive < **P<1 Power Set' or 'P<2 Power Set**

OP

Note: If the active power is negative, this function may generate a trip.

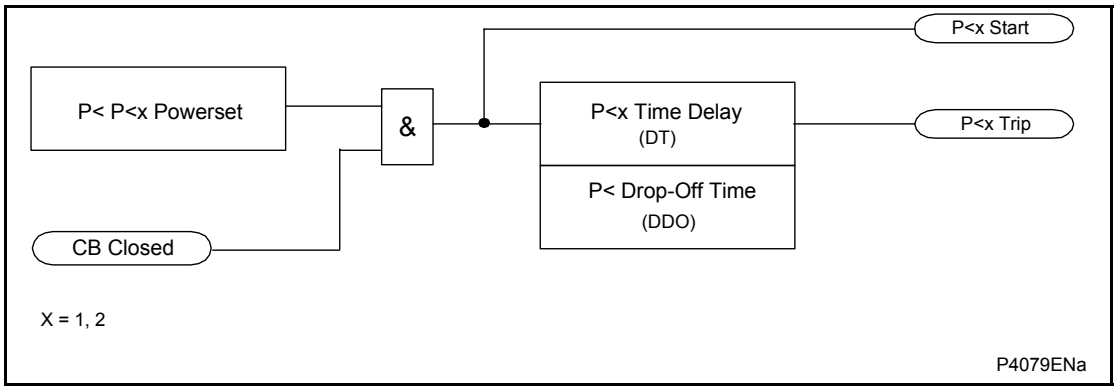

Figure 34: Loss of load logic diagram

1.12 Sensitive earth fault protection function (50N/51N/67N/32N/64N)

Two stages of sensitive earth fault protection are provided in the P24x relay. The first stage can be set as Inverse Definite Minimum Time (IDMT), and the second stage as Definite Time (DT) only. When directional earth fault protection is required the operating current should be derived from either a core balanced CT or the residual connection of three-phase CTs at the terminals of the machine. Direction of the earth fault current for this element is determined with reference to the polarizing signal, the residual voltage. The polarizing signal is taken from the residual overvoltage/NVD protection input.

A polarizing voltage threshold is also provided. The element cannot operate unless voltage exceeds this threshold. This helps to restrain the element during phase/phase faults when transient CT saturation produces spill current in the residual connection of the phase CTs. No residual voltage will be present during such non-earth fault conditions hence the DEF element cannot operate. The element will therefore be enabled only during genuine earth fault conditions when significant residual voltage will be present. As shown in Figure 35.

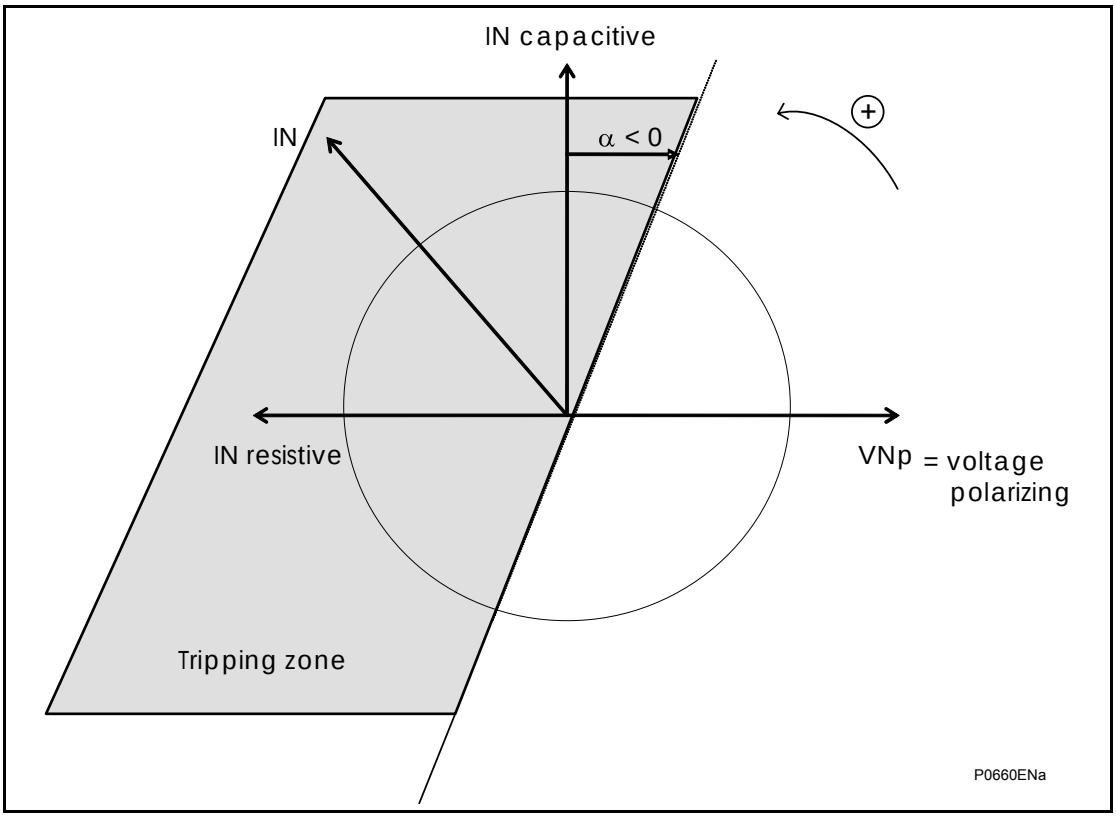

Figure 35: Directional sensitive earth fault characteristic

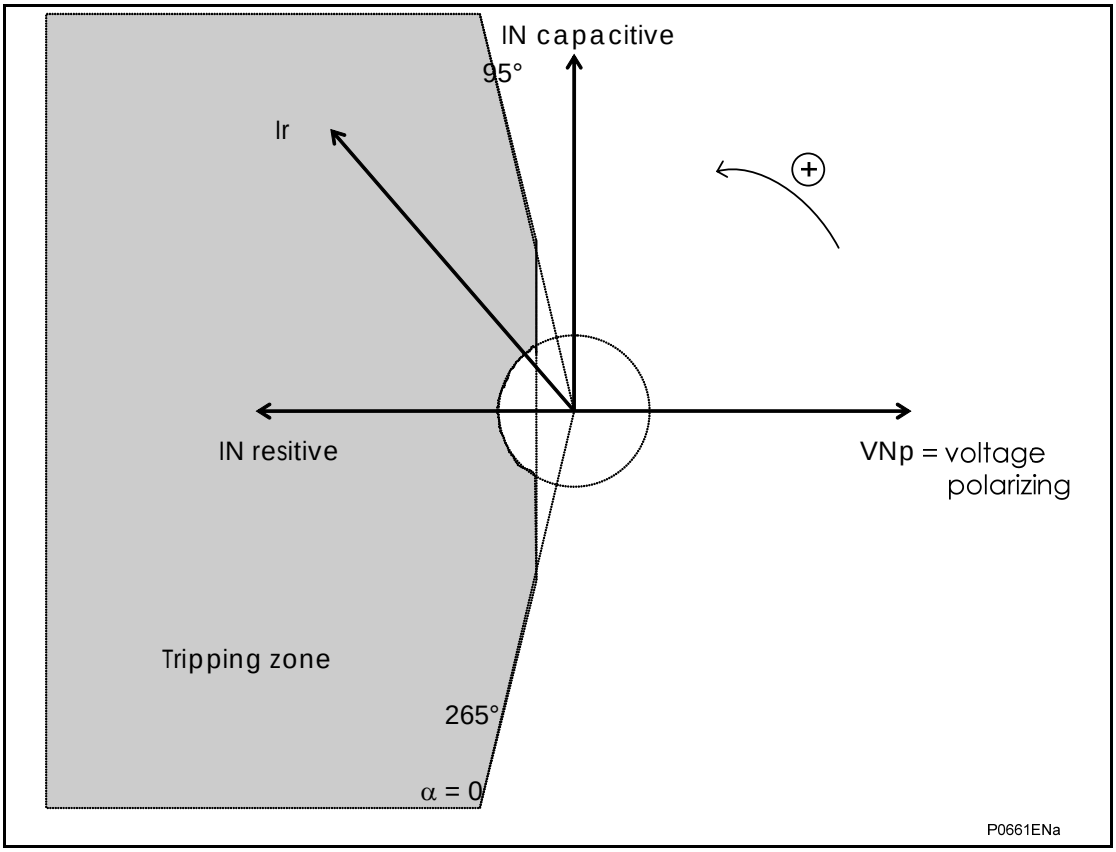

Figure 36: Wattmetric directional characteristic

The Wattmetric active power is given by the following formula:

$$PO = \frac{1}{3} \times V_n \times I_n \times Cos(\phi 0 - \alpha)$$

With: $\phi 0$ = phase shift between (In) and (-Vn)

α = Characteristic Angle

The tripping conditions are:

In = Residual current > **PO> Current Set**

Vn = residual voltage > **PO> Voltage Set**

$\phi 0$ = Arg(In) – Arg(Vn) ε [95° + α, 265° + α] where α = **PO> Char Angle**

$$PO = \frac{1}{3} \times V_n \times I_n \times Cos(\phi 0 - \alpha)$$ > K x (PO> Current Set)x(PO> Voltage Set)

A DDB (Digital Data Bus) signal is available to indicate the start and trip of each of the sensitive earth fault and wattmetric earth fault protection stages (Start ISEF>1/2: DDB 262, 264, Start PO>: DDB295, Trip ISEF>1/2: DDB261, 263, Trip PO>: DDB294). These signals are used to operate the output relays and trigger the disturbance recorder as programmed into the programmable Scheme Logic (PSL). The state of the DDB signals can also be programmed to be viewed in the **Monitor Bit x** cells of the **COMMISSION TESTS** column in the relay.

The logic diagram for sensitive directional earth fault protection with neutral voltage polarization is shown in Figure 37.

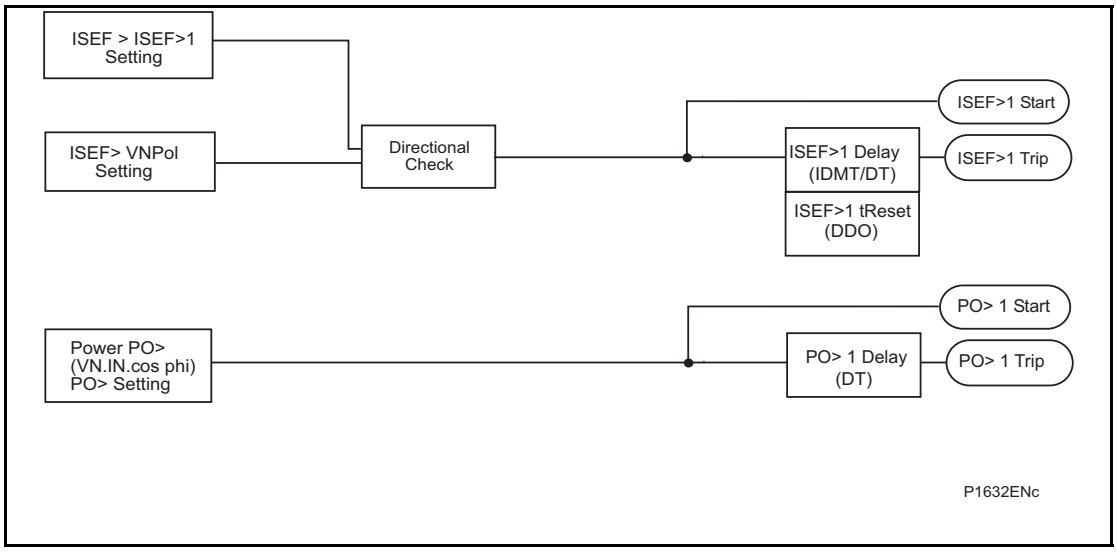

Figure 37: Directional SEF with VN polarization and wattmetric SEF

The directional check criteria are given below for the standard directional sensitive earth fault element:

Directional forward

$$-90° < (\text{angle}(I_N) - \text{angle}(V_N + 180°) - RCA) < 90°$$

1.12.1 User programmable sensitive earth fault protection

A user programmable sensitive earth fault curve facility is available for the first stage of sensitive earth fault protection. For information on how to program a customized sensitive earth fault curve and send and extract curves to and from the relay, refer to the document *Px4x/EN UPCT/A11*.

1.13 Derived earth fault protection function (50N/51N)

The derived earth fault protection can be either non-directional or directional. In order to cover all types of applications schemes, the criteria used for the directional boundary can be determined by 2 different ways :

3VTs connection scheme: same criteria as for the 'sensitive earth fault protection', i.e 'Zero-sequence voltage' polarization, with the same tripping conditions,

2VTs connection scheme: in this case, the criteria can be the angle between the negative phase sequence current and the negative phase sequence voltage.

The tripping conditions are indicated below:

I2 =	negative phase sequence current > **IN> I2pol Set**
V2 =	negative phase sequence voltage > **IN> V2pol Set**
ϕ0 =	Arg(I2) – Arg(V2)$\in$[95+α,265° + α] where α = **IN> Char Angle**

A DDB (Digital Data Bus) signal is available to indicate the start and trip of each of the derived earth fault protection stages (Start IN>1/2: DDB 266, 268, Trip IN>1/2: DDB 265, 267). These signals are used to operate the output relays and trigger the disturbance recorder as programmed into the programmable Scheme Logic (PSL). The state of the DDB signals can also be programmed to be viewed in the **Monitor Bit x** cells of the **COMMISSION TESTS** column in the relay.

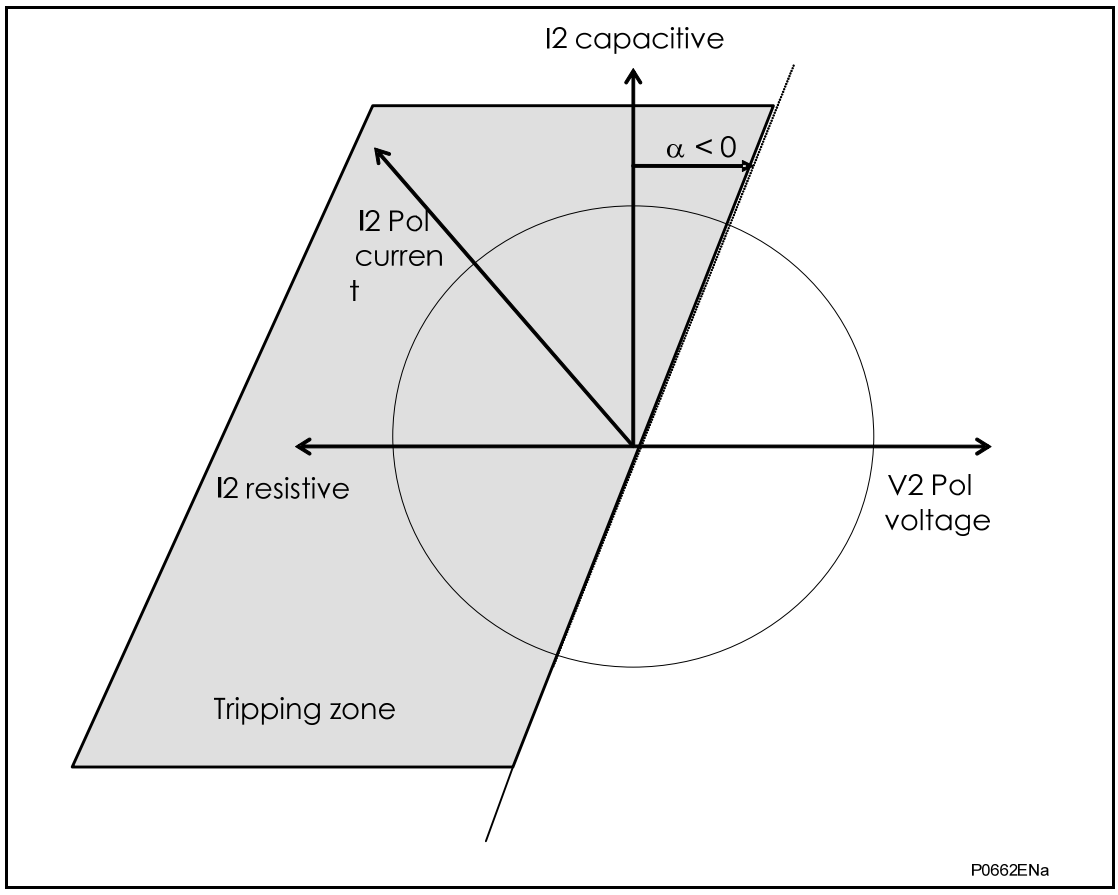

Figure 38: Derived earth fault characteristic

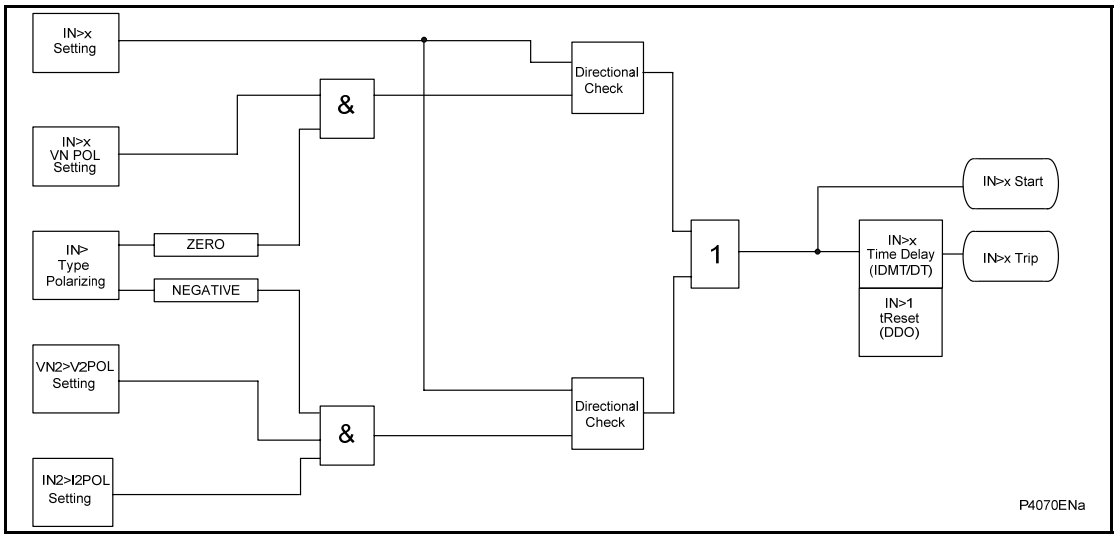

Figure 39: Derived directional earth fault logic diagram

A Typical application of the derived earth fault protection is shown below in Figure 40.

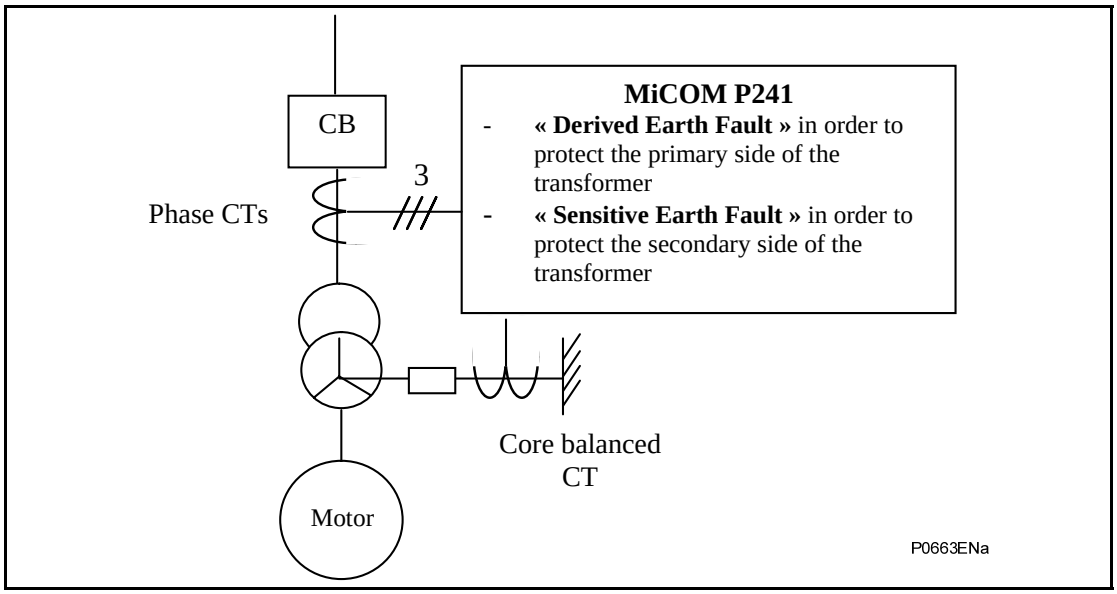

Figure 40: Typical derived earth fault application

1.13.1 User programmable derived earth fault protection

A user programmable derived earth fault curve facility is available for the first stage of derived earth fault protection. For information on how to program a customized derived earth fault curve and send and extract curves to and from the relay, refer to the document *Px4x/EN UPCT/A11*.

1.14 Resistive temperature device (RTD) thermal protection

To protect against any general or localized overheating, the P241/2/3 relay has the ability to accept inputs from up to 10 - 3 wire Type A PT100, Ni100 or Ni120 resistive temperature sensing devices (RTD). These are connected as shown in Figure 41 below.

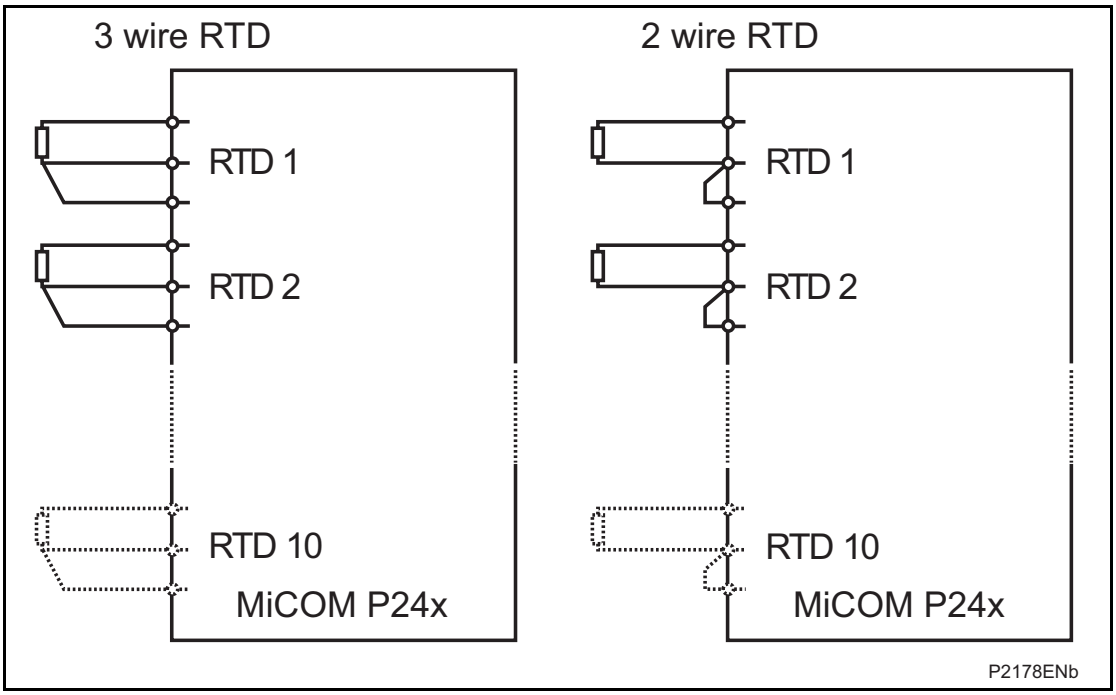

Figure 41: Connection for RTD thermal probes

Such probes can be strategically placed in areas of the machine that are susceptible to overheating or heat damage.

The probes can also be used to measure the external ambient temperature. The ambient temperature can be used to adapt the thermal overload protection operating time. A main and back-up RTD can be selected in the settings for the external ambient temperature. The units of temperature measurement Celsius or Fahrenheit can also be selected.

- Typically a PT100/Ni100/Ni120 RTD probe can measure temperature within the range – 0° to +400°C. The resistance of these devices changes with temperature, at 0°C a PT100 will have a resistance of 100 Ω

Should the measured resistance be outside of the permitted range, an RTD failure alarm will be raised, indicating an open or short circuit RTD input.

These conditions are signaled via DDB signals available within the PSL (RTD Short Cct, RTD Open Cct, RTD Data Error: DDB 201-203) and are also shown in the measurements 3 menu.

DDB signals are also available to indicate the alarm and trip of the each RTD, (RTD 1-10 Alarm: DDB 191-200, RTD 1-10 Trip: DDB 305-314). The state of the DDB signals can be programmed to be viewed in the **Monitor Bit x** cells of the **COMMISSION TESTS** column in the relay.

See the Installation chapter (*P24x/EN IN*), for recommendations on RTD connections and cables.

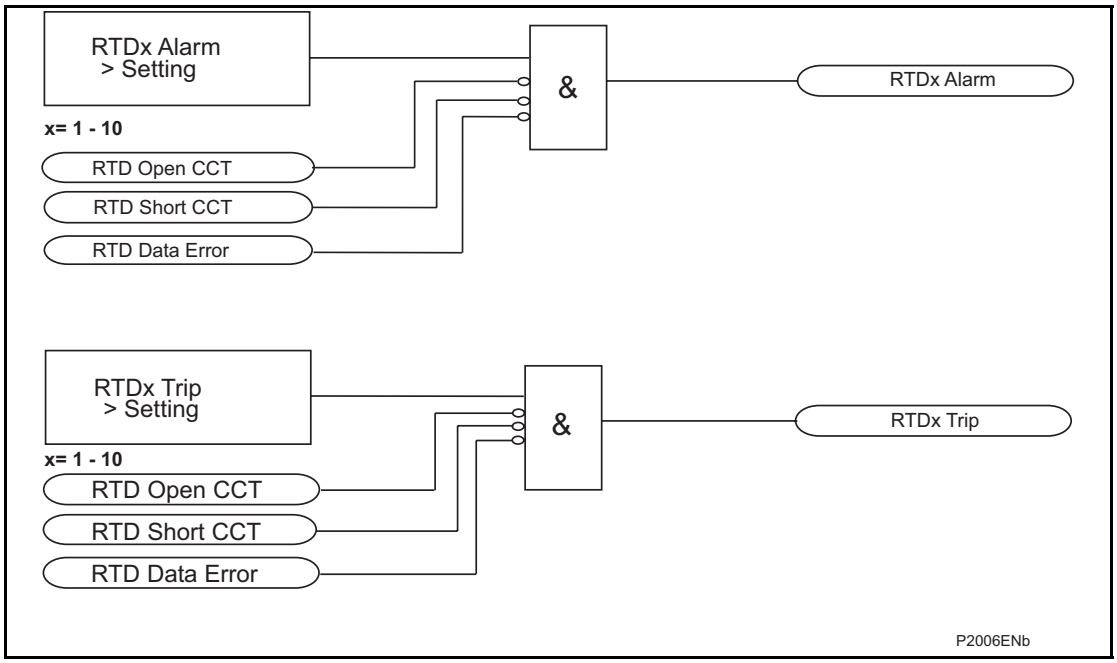

Figure 42: RTD logic diagram

OP

1.14.1 Principle of the RTD connection

The aim of such a connection is to compensate the influence of the r1 and r2 resistors.

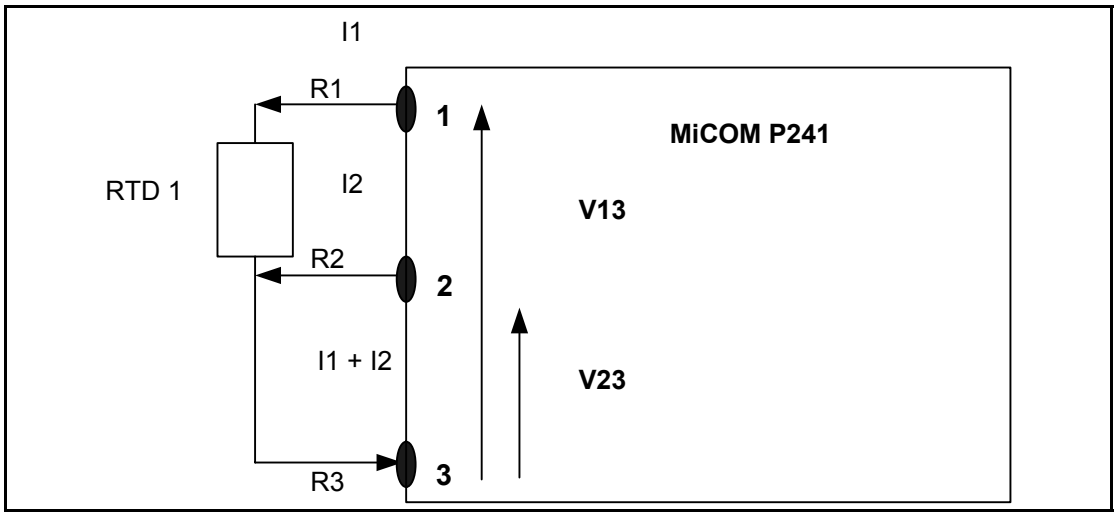

Figure 43: RTD connection

A constant current is injected by the MICOM P241 relay from the connections1 and 2 : i1 = i2

$V13 = r1 * I1 + R_{rtd} * I1 - r3 * (I1 + I2)$,

$V23 = r2 * I2 - r3 * (I1 + I2)$,

$V13 - U23 = r1 * I1 + R_{rtd} * I1 - r3 * (I1 + I2) - r2 * I2 + r3 * (I1 + I2)$

Assuming that the three cables have the same length and are the same material, hence the resisitors r1, r2 and r3 are the same :

$V13 - V23 = R_{rtd} * I1$ = Voltage at the RTD terminals.

1.15 Circuit breaker failure protection (50BF)

The circuit breaker failure protection incorporates two timers, **CB Fail 1 Timer** and **CB Fail 2 Timer**, allowing configuration for the following scenarios:

- Simple CBF, where only **CB Fail 1 Timer** is enabled. For any protection trip, the **CB Fail 1 Timer** is started, and normally reset when the circuit breaker opens to isolate the fault. If breaker opening is not detected, **CB Fail 1 Timer** times out and closes an output contact assigned to breaker fail (Trip CBF1: DDB 319, using the programmable scheme logic). This contact is used to backtrip upstream switchgear, generally tripping all infeeds connected to the same busbar section.
- A re-tripping scheme, plus delayed backtripping. Here, **CB Fail 1 Timer** is used to route a trip to a second trip circuit of the same circuit breaker. This requires duplicated circuit breaker trip coils, and is known as re-tripping. Should re-tripping fail to open the circuit breaker, a backtrip may be issued following an additional time delay. The backtrip uses **CB Fail 2 Timer**, which is also started at the instant of the initial protection element trip (Trip CBF2: DDB 320).

CBF elements **CB Fail 1 Timer** and **CB Fail 2 Timer** can be configured to operate for trips triggered by protection elements within the relay or via an external protection trip. The latter is achieved by allocating one of the relay opto-isolated inputs to **DDB 115 External Trip** using the programmable scheme logic.

Resetting of the CBF is possible from a breaker open indication or from a protection reset. In these cases resetting is only allowed provided the undercurrent elements have also reset. The resetting options are summarized in the following table:

Initiation (menu selectable)	CB fail timer reset mechanism
Current based protection (e.g. 50/51/46/67N/87..)	The resetting mechanism is fixed. [IA< operates] & IB< operates] & [IC< operates] &
Non-current based protection (e.g. 27/59N/81U/32R..)	Three options are available. The user can select from the following options. [All I< elements operate] [Protection element reset] AND [All I< elements operate] CB open AND [All I< elements operate]
External protection	Three options are available. The user can select from the following options. [All I< elements operate] [Protection element reset] AND [All I< elements operate] CB open AND [All I< elements operate]

Table 3: CBF resetting options

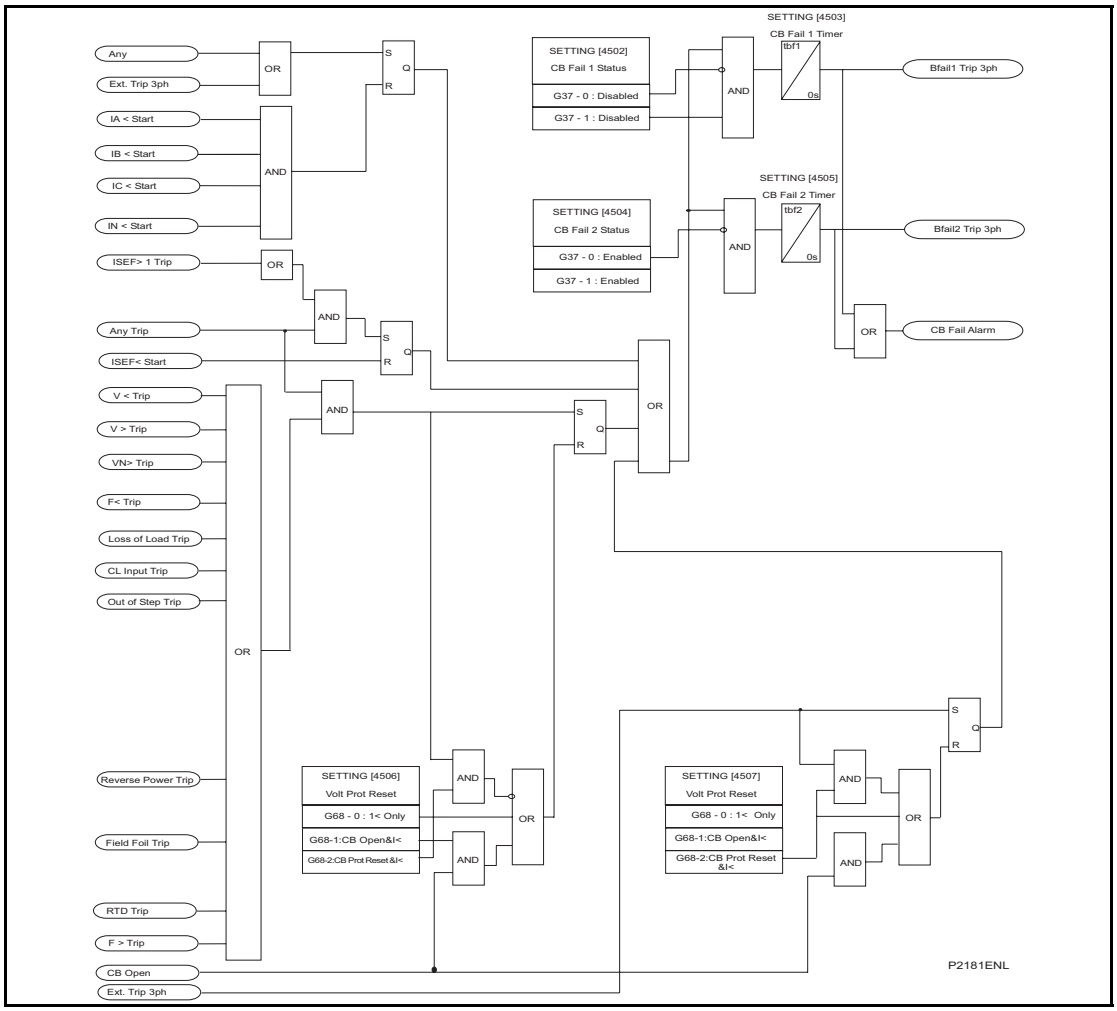

Figure 44: CB fail logic

1.16 Current loop inputs and outputs

1.16.1 Current loop inputs

Four analog (or current loop) inputs are provided for transducers with ranges of 0 - 1 mA, 0 - 10 mA, 0 - 20 mA or 4 - 20 mA. The analog inputs can be used for various transducers such as vibration monitors, tachometers and pressure transducers. Associated with each current loop input are units (A, V, Hz, W, Var, VA, °C, F, %, s) and there are two protection stages, one for alarm and one for trip. Each current loop input can be individually enabled or disabled and each input has a definite time delay alarm and trip stage. There is also a delay on drop off time which applies to all inputs.

The Alarm and Trip stages operate when the input current is above the input value. The sample interval is nominally 50 ms per input.

The relationship between the transducer measuring range and the current input range is linear. The maximum and minimum settings correspond to the limits of the current input range. This relationship is shown in Figure 45.

Figure 45 also shows the relationship between the measured current and the analog to digital conversion (ADC) count. The hardware design allows for over-ranging, with the maximum ADC count (4095 for a 12-bit ADC) corresponding to 1.0836 mA for the 0 - 1 mA range, and 22.7556 mA for the 0 - 10 mA, 0 - 20 mA and 4 - 20 mA ranges. The relay will therefore continue to measure and display values beyond the Maximum setting, within its numbering capability.

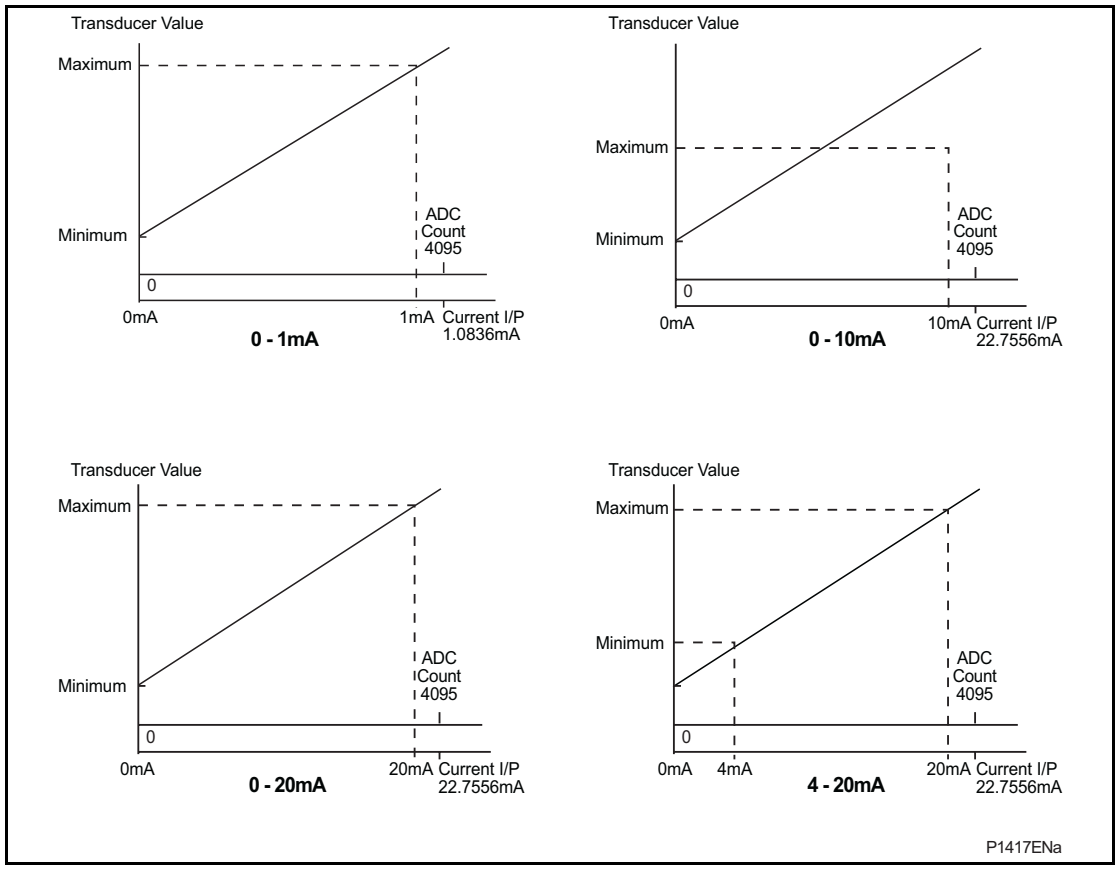

Figure 45: Relationship between the transducer measuring quantity and the current input range

Note: If the Maximum is set less than the Minimum, the slopes of the graphs will be negative. This is because the mathematical relationship remains the same irrespective of how Maximum and Minimum are set, e.g., for 0 - 1 mA range, Maximum always corresponds to 1 mA and Minimum corresponds to 0 mA.

DDB signals are available to indicate operation of the alarm and trip stages of the each current loop inputs, (Analog Inp1/2/3/4 Alarm: DDB 211-214, Trip Analog Inp1/2/3/4: DDB 321-324. The state of the DDB signals can be programmed to be viewed in the **Monitor Bit x** cells of the **COMMISSION TESTS** column in the relay.

The current loop input starts are mapped internally to the Any Start DDB signal – DDB 369.

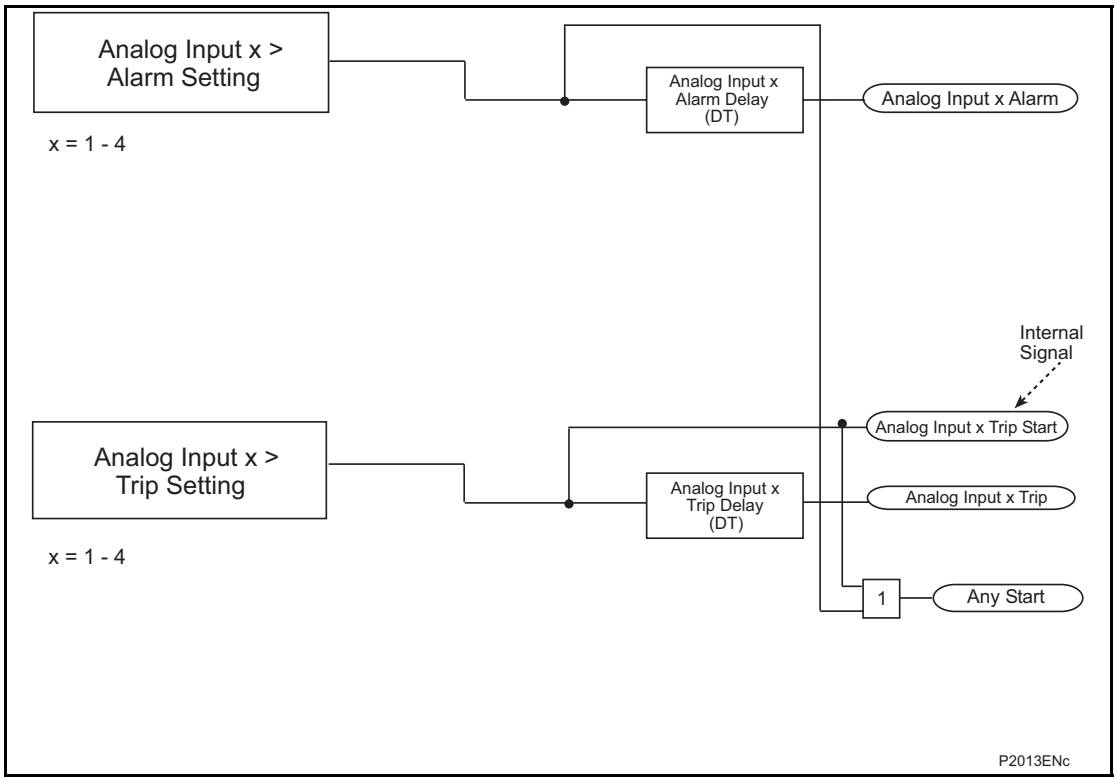

Figure 46: Analog (current loop) input logic diagram

1.16.2 Current loop output

Four current loop (analog) outputs are provided with ranges of 0 - 1 mA, 0 - 10 mA, 0 - 20 mA or 4 - 20 mA which can alleviate the need for separate transducers. These may be used to feed standard moving coil ammeters for analog indication of certain measured quantities or into a SCADA using an existing analog RTU.

The CLIO output conversion task runs every 50 ms and the refresh interval for the output measurements is nominally 200 ms.

The user can set the measuring range for each analog output. The range limits are defined by the Maximum and Minimum settings.

This allows the user to “zoom in” and monitor a restricted range of the measurements with the desired resolution. For voltage, current and power quantities, these settings are set in primary quantities.

The output current of each analog output is linearly scaled to its range limits, as defined by the Maximum and Minimum settings. The relationship is shown in Figure 47.

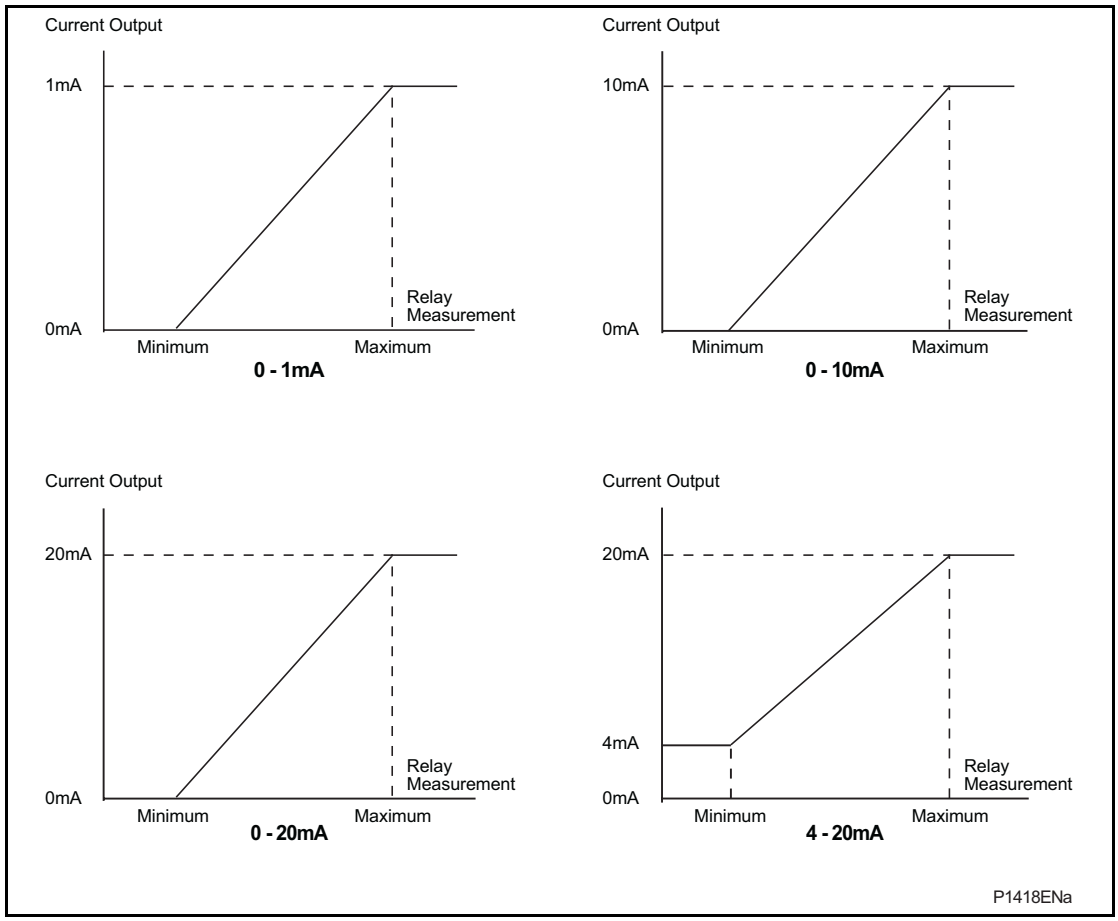

Figure 47: Relationship between the current output and the relay measurement

Note: If the Maximum is set less than the Minimum, the slopes of the graphs will be negative. This is because the mathematical relationship remains the same irrespective of how Maximum and Minimum are set, e.g., for 0 - 1 mA range, Maximum always corresponds to 1 mA and Minimum corresponds to 0 mA.

The P24x transducers are of the current output type. This means that the correct value of output will be maintained over the load range specified. The range of load resistance varies a great deal, depending on the design and the value of output current. Transducers with a full scale output of 10 mA will normally feed any load up to a value of 1000 Ω (compliance voltage of 10 V). This equates to a cable length of 15 km (approximately) for lightweight cable (1/0.6 mm cable). A screened cable earthed at one end only is recommended to reduce interference on the output current signal. The table below gives typical cable impedances/km for common cables. The compliance voltage dictates the maximum load that can be fed by a transducer output. Therefore, the 20 mA output will be restricted to a maximum load of 500 Ω approximately.

Cable	1/0.6 mm	1/0.85 mm	1/1.38 mm
CSA (mm2)	0.28	0.57	1.50
R (Ω/km)	65.52	32.65	12.38

Table 4: Impedance per kilometre values of typical cables

The receiving equipment, whether it be a simple moving-coil (DC milliamp meter) instrument or a remote terminal unit forming part of a SCADA system, can be connected at any point in the output loop and additional equipment can be installed at a later date (provided the compliance voltage is not exceeded) without any need for adjustment of the transducer output.

Where the output current range is used for control purposes, it is sometimes worthwhile to fit appropriately rated diodes, or Zener diodes, across the terminals of each of the units in the series loop to guard against the possibility of their internal circuitry becoming open circuit. In this way, a faulty unit in the loop does not cause all the indications to disappear because the constant current nature of the transducer output simply raises the voltage and continues to force the correct output signal round the loop.

Current loop output parameter	Abbreviation	Units	Range	Step	Default min.	Defaultmax.
Current Magnitude	IA Magnitude IB Magnitude IC Magnitude IN Magnitude	A	0 to 100 k	1	0	100
RMS Phase Currents	IA RMS IB RMS IC RMS IN RMS	A	0 to 100 k	1	0	100
P-N voltage Magnitude	VAN Magnitude VBN Magnitude VCN Magnitude VN Magnitude	V	0 to 20 k	1	0	100
P-N voltage RMS	VAN RMS VBN RMS VCN RMS VN RMS	V	0 to 20 k	1	0	100
P-P voltage Magnitude	VAB Magnitude VBC Magnitude VCA Magnitude	V	0 to 20 k	1	0	100
RMS Phase-Phase Voltages	VAB RMS Magnitude VBC RMS Magnitude VCA RMS Magnitude	V	0 to 20 k	1	0	100
Frequency	Frequency	Hz	0 to 100	1	0	100
3 Ph Active Power	Three-Phase Watts	W	-10 M to 30 M	1	0	100
3 Ph Reactive Power	Three-Phase Vars	Var	-10 M to 30 M	1	0	100
3 Ph Apparent Power	Three-Phase VA	VA	-10 M to 30 M	1	0	100
3 Ph Power Factor	3Ph Power Factor		-1 to 1	0.01	0	1
RTD Temperatures	RTD 1 RTD 2 RTD 3 RTD 4 RTD 5 RTD 6 RTD 7 RTD 8 RTD 9 RTD 10	°C	-40 to 400	1	0	100.0
Number of hottest RTD	Nb Hottest RTD		1-10	1	0	10
Thermal State	Thermal State	%	0 to 150	0.1	0	100

Current loop output parameter	Abbreviation	Units	Range	Step	Default min.	Defaultmax.
Time to Thermal Trip	Time to Thermal Trip	Sec	0-300	0.1	0	100
Time to Next Start	Time to Next Start	Sec	0-300	0.1	0	100

Table 5: Current loop output parameters

Note 1: The current loop (analog) outputs are refreshed every 200 ms.

Note 2: The polarity of Watts, Vars and power factor is affected by the Measurements Mode setting.

Note 3: These settings are for nominal 1 A and 100/120 V versions only. For other nominal versions they need to be multiplied accordingly.

Note 4: All current loop (analog) output measurements are in primary values.

2 OPERATION OF NON PROTECTION FUNCTIONS

2.1 VT supervision

The voltage transformer supervision (VTS) feature is used to detect failure of the ac voltage inputs to the relay. This may be caused by internal voltage transformer faults, overloading, or faults on the interconnecting wiring to relays. This usually results in one or more VT fuses blowing. Following a failure of the ac voltage input there would be a misrepresentation of the phase voltages on the power system, as measured by the relay, which may result in mal-operation.

The VTS logic in the relay is designed to detect the voltage failure, and automatically adjust the configuration of protection elements whose stability would otherwise be compromised. A time-delayed alarm output is also available.

There are three main aspects to consider regarding the failure of the VT supply. These are defined below:

- Loss of one or two-phase voltages
- Loss of all three-phase voltages under load conditions
- Absence of three-phase voltages upon line energization

The VTS feature within the relay operates on detection of negative phase sequence (NPS) voltage without the presence of negative phase sequence current. This gives operation for the loss of one or two-phase voltages. Stability of the VTS function is assured during system fault conditions, by the presence of NPS current. The use of negative sequence quantities ensures correct operation even where three-limb or 'V' connected VT's are used.

Negative sequence VTS element:

The negative sequence thresholds used by the element are V2 = 10 V and I2 = 0.05 to 0.5 In settable (defaulted to 0.05 In).

2.1.1 Loss of all three-phase voltages under load conditions

Under the loss of all three-phase voltages to the relay, there will be no negative phase sequence quantities present to operate the VTS function. However, under such circumstances, a collapse of the three-phase voltages will occur. If this is detected without a corresponding change in any of the phase current signals (which would be indicative of a fault), then a VTS condition will be raised. In practice, the relay detects the presence of superimposed current signals, which are changes in the current applied to the relay. These signals are generated by comparison of the present value of the current with that exactly one cycle previously. Under normal load conditions, the value of superimposed current should therefore be zero. Under a fault condition a superimposed current signal will be generated which will prevent operation of the VTS.

The phase voltage level detector is 10 V to 70 V settable (defaulted to 30 V) using the 'Threshold 3P' setting..

The sensitivity of the superimposed current elements is settable 0.1In to 5In (default 0.1In) using the 'Delta I>' setting.

2.1.2 Absence of three-phase voltages upon line energization

If a VT were inadvertently left isolated prior to line energization, incorrect operation of voltage dependent elements could result. The previous VTS element detected three-phase VT failure by absence of all three-phase voltages with no corresponding change in current. On line energization there will, however, be a change in current (as a result of load or line charging current for example). An alternative method of detecting three-phase VT failure is therefore required on line energization.

The absence of measured voltage on all three-phases on line energization can be as a result of 2 conditions. The first is a three-phase VT failure and the second is a close up

three-phase fault. The first condition would require blocking of the voltage dependent function and the second would require tripping. To differentiate between these 2 conditions an overcurrent level detector (VTS I> Inhibit) is used which will prevent a VTS block from being issued if it operates. This element should be set in excess of any non-fault based currents on line energization (load, line charging current, transformer inrush current if applicable) but below the level of current produced by a close up three-phase fault. If the line is now closed where a three-phase VT failure is present the overcurrent detector will not operate and a VTS block will be applied. Closing onto a three-phase fault will result in operation of the overcurrent detector and prevent a VTS block being applied.

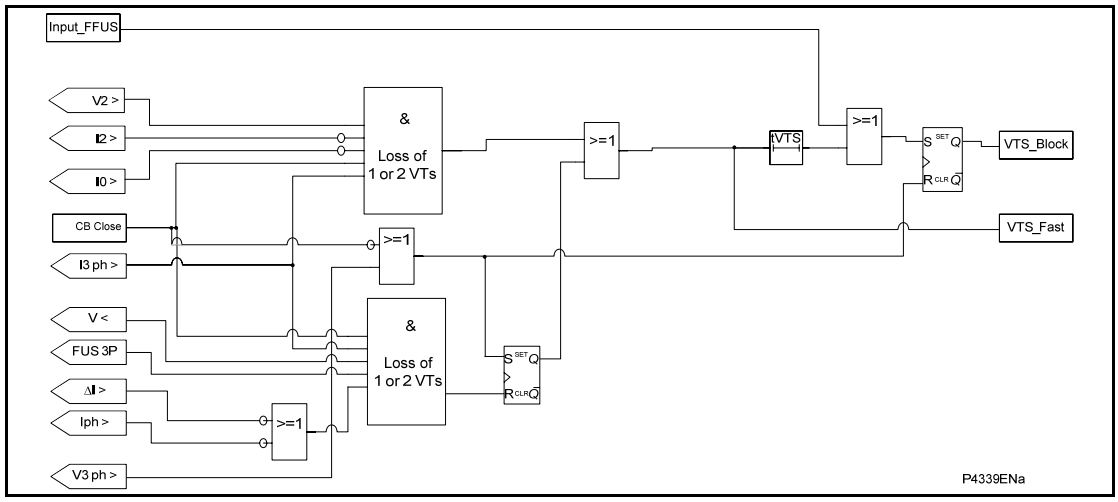

Figure 48: VT supervision logic diagram

VTS Fast is given by the equation below:

(V2> And /I2> And /I0 And CB_Close And I3ph>) Or (FUS3P And V< And CB_Close And I3ph> And (/ΔI> Or /Iph>)

Required to drive the VTS logic are a number of dedicated level detectors as follows:

- I3Ph>, this level detector operates in less than 20 ms and this setting should be greater than load current. This setting is specified as the VTS current threshold. These level detectors pick-up at 100% of setting and drop-off at 95% of setting.
- I2>, this level detector operates on negative sequence current and has a user setting. This level detector picks-up at 100% of setting and drops-off at 95% of setting.
- ΔI>, this level detector operates on superimposed phase currents and has a settable setting.
- V3Ph>, this level detectors operates on phase voltages and has a settable setting.
- V2>, this level detector operates on negative sequence voltage, it has a fixed setting of 10 V with pick-up at 100% of setting and drop-off at 95% of setting.

2.1.2.1 Inputs

Signal name	Description
I3Ph>	Phase current levels (Fourier magnitudes)
I2>	I2 level (Fourier magnitude).
ΔI	Phase current samples (current and one cycle previous)
V3Ph>	Phase voltage signals (Fourier magnitudes)
V2>	Negative sequence voltage (Fourier magnitude)
Input FFUs	To remotely initiate the VTS blocking via an opto
FUS3P	Detect 3P setting which allows the fuse failure 3 poles detection

Table 6: VTS inputs level detector settings outputs

OP

Signal name	Description
VTS Fast	Internal fuse failure
VTS Block	Alarm indication, internal fuse failure confirmed at the end of VTS timer

Table 7: VTS outputs

2.1.3 Operation

The relay may respond as follows to an operation of any VTS element:

- Forced blocking of voltage dependent protection elements (DDB 364 VT Supervision, Fast Block and DDB 363 VT, confirmed block)
- VTS provides alarm indication (DDB 363 VT, confirmed block);

The confirmed fuse failureVTS_Block blocks the following protection functions:

- Undervoltage
- Positive sequence undervoltage
- Loss of load
- Reverse power
- Residual Overvoltage
- Wattmetric SEF
- Reacceleration (if enabled)
- Overcurrent DEF (if directional is used)
- Overcurrent SEF (if directional is used)

NB: Functions which use the directional element will be blocked if set as directional:

- “IN> VTS Blocking” = xx for each stage. When the relevant bit is set to 1, operation of VTS will block the stage if directionnalized, when set to 0 the function will be set to Non-directional.
- “ISEF> VTS Blocking” = xx for each stage. Meaning and behavior is the same.

The internal fuse failure VTS_Fast blocks the same functions, but if a fault is detected before the confirmation timer is issued, the functions will be unblocked. The fault can be detected by the criteria Iph>, I2>, I0> and ΔI>.

The VTS I> Inhibit element is used to override a VTS block in event of a fault occurring on the system which could trigger the VTS logic. Once the VTS block has been established, however, then it would be undesirable for subsequent system faults to override the block. The VTS block will therefore be latched after a user settable time delay VTS Time Delay. Once the signal has latched then resetting method is automatic by CB Open or the restoration of the three-phase voltages above the phase level detector settings mentioned previously.

A VTS indication will be given after the VTS Time Delay has expired.

Where a miniature circuit breaker (MCB) is used to protect the voltage transformer ac output circuits, it is common to use MCB auxiliary contacts to indicate a three-phase output disconnection. As previously described, it is possible for the VTS logic to operate correctly without this input. However, this facility has been provided for compatibility with various utilities current practices. Energizing an opto-isolated input assigned to DDB 362 “MCB/VTS on the relay will therefore provide the necessary block.

The blocking of the VTS logic for a number of different fault conditions is considered below.

1. Phase-phase fault

The I2> element should detect phase-phase faults when the CB is closed and block the VTS logic.

2. Three phase faults

The delta current level detectors should detect the change in current for a close up 3 phase fault when the CB is closed and block the VTS.

The IPh> level detector should detect a 3 phase fault when closing the CB onto a fault and block the VTS logic.

2.2 CT supervision

The CT supervision feature operates on detection of derived residual current, in the absence of corresponding derived or measured residual voltage that would normally accompany it.

The CT supervision can be set to operate from the residual voltage measured at the VNEUTRAL input (VN1 input for P241/2/3) or the residual voltage derived from the three-phase-neutral voltage inputs as selected by the **CTS Vn Input** setting.

The voltage transformer connection used must be able to refer residual voltages from the primary to the secondary side. Therefore, this element should only be enabled where the three-phase VT is of five limb construction, or comprises three single-phase units, and has the primary star point earthed. A derived residual voltage or a measured residual voltage is available.

There are two stages of CT supervision CTS-1 and CTS-2. The derived neutral current is calculated vectorially from IA, IB, IC for CTS-1 and IA-2, IB-2, IC-2 for CTS-2. The neutral voltage is either measured or derived, settable by the user.

CTS-1 supervises the CT inputs to IA, IB, IC which are used by the biased differential protection and all the power, impedance and overcurrent based protection functions. CTS-2 supervises the CT inputs to IA-2, IB-2, IC-2 which are used by the biased differential protection in the P243. The CTS-2 independent enabled/disabled setting is to prevent CTS-2 from giving unnecessary alarms when the Motor Differential is disabled.

Operation of the element will produce a time-delayed alarm visible on the LCD and event record (plus DDB 229: CT-1 Fail Alarm, DDB 230: CT-2 Fail Alarm), with an instantaneous block (DDB 360: CTS-1 Block, DDB 361 CTS-2 Block) for inhibition of protection elements. Protection elements operating from derived quantities, (Negative Phase Sequence (NPS) Overcurrent, NPS Thermal, Thermal Overload protection) are always blocked on operation of the CTS-1 supervision element; other protections can be selectively blocked by customizing the PSL, integrating DDB 360: CTS-1 Block and DDB 361: CTS-2 Block with the protection function logic.

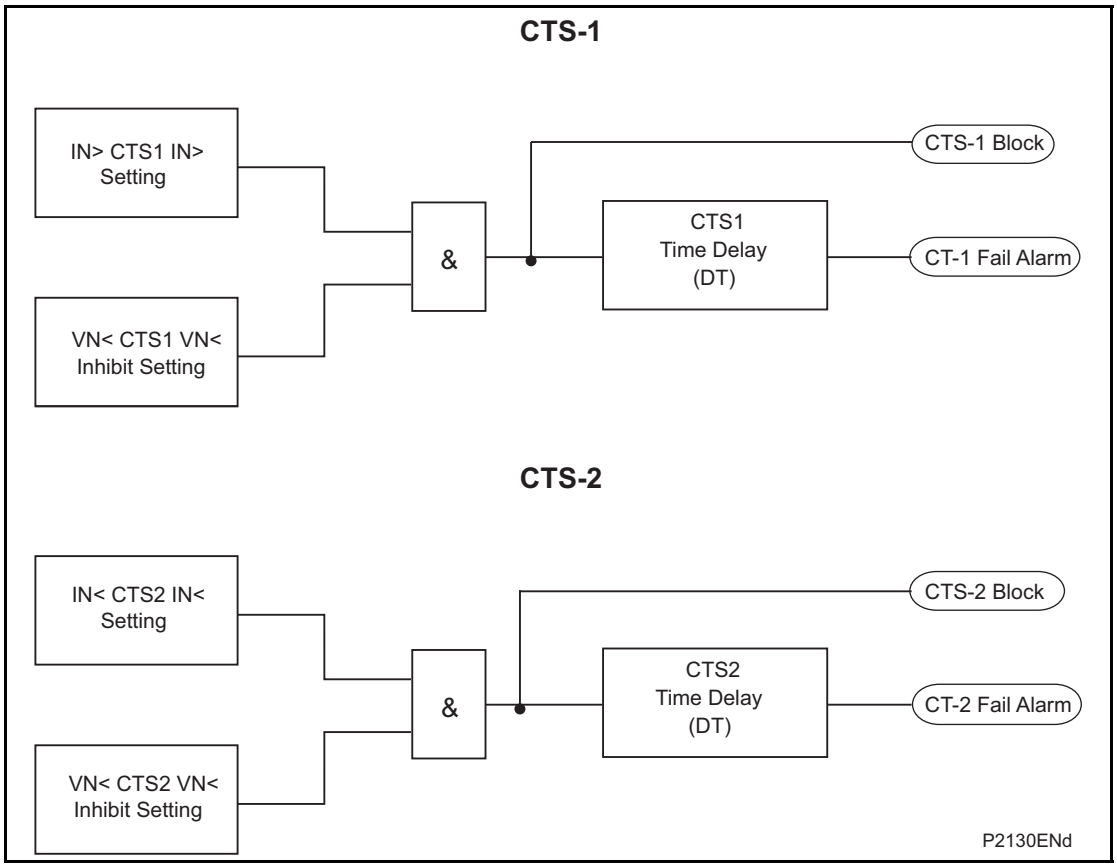

Figure 49: CT supervision diagram

2.3 Circuit breaker state monitoring

MiCOM relays can be set to monitor normally open (52a) and normally closed (52 b) auxiliary contacts of the circuit breaker. Under healthy conditions, these contacts will be in opposite states. Should both sets of contacts be open, this would indicate one of the following conditions:

- Auxiliary contacts/wiring defective
- Circuit Breaker (CB) is defective
- CB is in isolated position

Should both sets of contacts be closed, only one of the following two conditions would apply:

- Auxiliary contacts/wiring defective
- Circuit Breaker (CB) is defective

If any of the above conditions exist, an alarm will be issued after a 5 s time delay. A normally open/normally closed output contact can be assigned to this function via the programmable scheme logic (PSL). The time delay is set to avoid unwanted operation during normal switching duties.

Where only 52A is used on its own then the relay will assume a 52B signal from the absence of the 52A signal. Circuit breaker status information will be available in this case but no discrepancy alarm will be available. The above is also true where only a 52B is used. If both 52A and 52B are used then status information will be available and in addition a discrepancy alarm will be possible (CB Status Alarm: DDB 185), according to the following table. 52A and 52B inputs are assigned to relay opto-isolated inputs via the PSL (CB Aux 3ph 52A: DDB 105, CB Aux 3ph 52A: DDB 106). The CB State Monitoring logic is shown in Figure 50.

Auxiliary contact position		CB state detected	Action
52A	52B		
Open	Closed	Breaker Open	Circuit breaker healthy
Closed	Open	Breaker Closed	Circuit breaker healthy

Auxiliary contact position		CB state detected	Action
Closed	Closed	CB Failure	Alarm raised if the condition persists for greater than 5 s
Open	Open	State Unknown	Alarm raised if the condition persists for greater than 5 s

Table 8: Possible states of CB auxiliary contacts and the CTS element corresponding actions

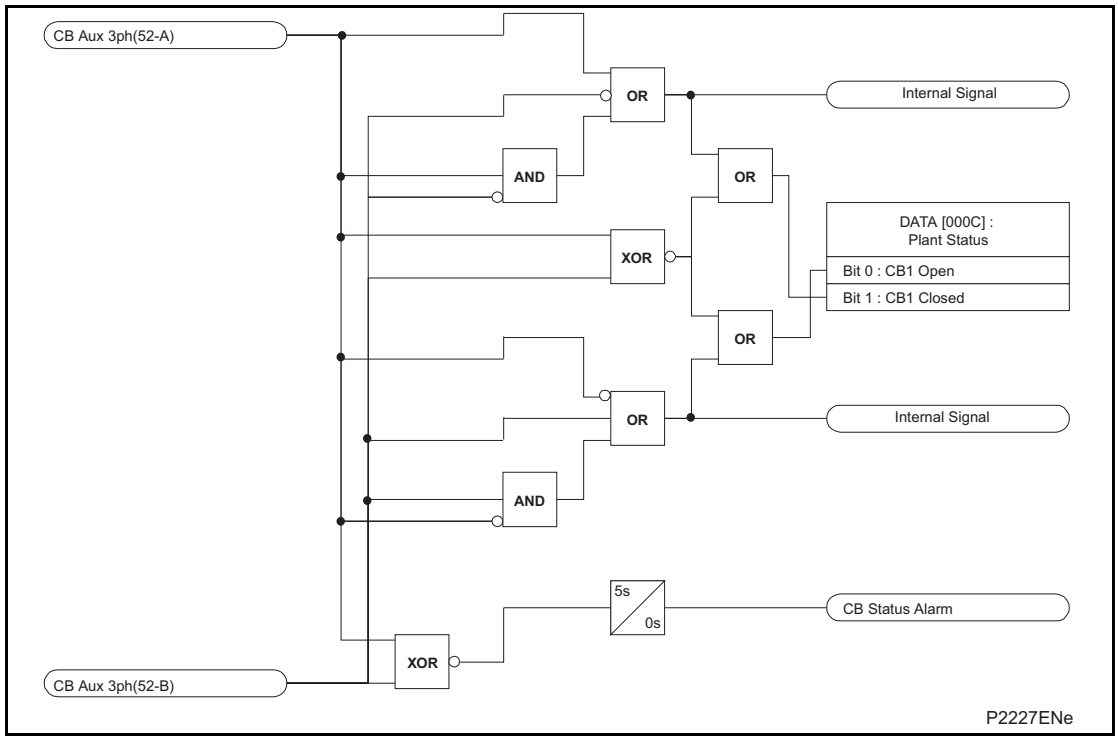

Figure 50: CB state monitoring

2.4 Circuit breaker condition monitoring

The P24x relays record various statistics related to each circuit breaker trip operation, allowing a more accurate assessment of the circuit breaker condition to be determined. These monitoring features are discussed in the following section.

2.4.1 Circuit breaker condition monitoring features

For each circuit breaker trip operation the relay records statistics as shown in the following table taken from the relay menu. The menu cells shown are counter values only. The Min./Max. values in this case show the range of the counter values. These cells can not be set:

Menu text	Default setting	Setting range		Step size
		Min.	Max.	
CB Operations	0	0	10000	1
Displays the total number of trips issued by the relay.				
Total IA Broken	0	0	25000 In^	1
Displays the total accumulated fault current interrupted by the relay for the A phase.				
Total IB Broken	0	0	25000 In^	1
Displays the total accumulated fault current interrupted by the relay for the A phase.				
Total IC Broken	0	0	25000 In^	1 In^
Displays the total accumulated fault current interrupted by the relay for the A phase.				
CB Operate Time	0	0	0.5 s	0.001

OP

Menu text	Default setting	Setting range		Step size
		Min.	Max.	
Displays the calculated CB operating time. CB operating time = time from protection trip to undercurrent elements indicating the CB is open.				
Reset All Values	No		Yes, No	
Reset CB Data command. Resets CB Operations and Total IA/IB/IC broken current counters to 0.				

Table 9: Circuit breaker condition monitoring features

The above counters may be reset to zero, for example, following a maintenance inspection and overhaul.

The circuit breaker condition monitoring counters will be updated every time the relay issues a trip command. In cases where the breaker is tripped by an external protection device it is also possible to update the CB condition monitoring. This is achieved by allocating one of the relays opto-isolated inputs (using the programmable scheme logic) to accept a trigger from an external device. The signal that is mapped to the opto is called **External Trip**, DDB 115.

Note: When in Commissioning test mode the CB condition monitoring counters will not be updated.

The motor accumulated run time displayed in the menu cell “Motor Run Time” of the “Measurement 3” menu is initiated each time the switching device is closed and remains closed.

OP

2.5 Circuit breaker control

The relay includes the following options for control of a single circuit breaker:

- Local tripping and closing, via the relay menu.
- Local tripping and closing, via relay opto-isolated inputs. (DDD111:Close, DDB112: Trip)
- Remote tripping and closing, using the relay communications.

It is recommended that separate relay output contacts are allocated for remote circuit breaker control and protection tripping. This enables the control outputs to be selected via a local/remote selector switch as shown in Figure 51. Where this feature is not required the same output contact(s) can be used for both protection and remote tripping.

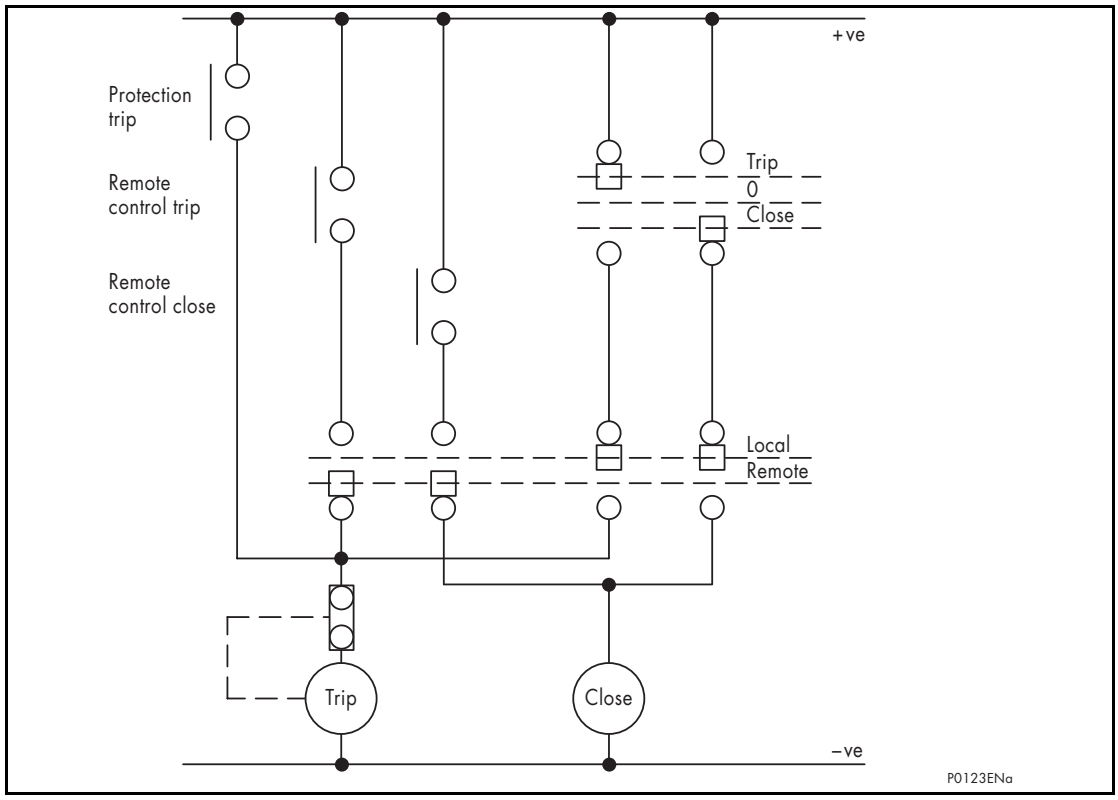

Figure 51: Remote control of circuit breaker

A manual trip will be permitted provided that the circuit breaker is initially closed. Likewise, a close command can only be issued if the CB is initially open. To confirm these states it will be necessary to use the breaker 52A contact.

Once a CB Close command is initiated the output contact can be set to operate following a user defined time delay (**Man Close Delay**). This would give personnel time to move away from the circuit breaker following the close command. This time delay will apply to all manual CB Close commands.

The length of the trip or close control pulse can be set using the **Trip Pulse Time** and **Close Pulse Time** settings respectively. These should be set long enough to ensure the breaker has completed its open or close cycle before the pulse has elapsed.

Note: The manual close commands are found in the **SYSTEM DATA** column and the hotkey menu.

If an attempt to close the breaker is being made, and a protection trip signal is generated, the protection trip command overrides the close command.

If the CB fails to respond to the control command (indicated by no change in the state of CB Status inputs) a **CB Failed to Trip** or **CB Failed to Close** alarm will be generated after the relevant trip or close pulses have expired. These alarms can be viewed on the relay LCD display, remotely via the relay communications, or can be assigned to operate output contacts for annunciation using the relays programmable scheme logic (PSL).

2.6 Changing setting groups

The setting groups can be changed either via a DDB signal or via a menu selection selection or via the hotkey menu. In the Configuration column if **Setting Group - select via optos** is selected then the Setting Group DDB (107) which is dedicated for setting group selection, can be used to select the setting group. This DDB signal can be connected to an opto input for local selection or a control input for remote selection of the setting groups. If an opto is used to change the setting group, Setting Group 1 is selected when the Setting Group DDB (107) is de-energized and Setting Group 2 is selected when the Setting Group DDB (107) is energized. If **Setting Group - select via menu** is selected then in the Configuration column the **Active Settings - Group1/2** can be used to select the setting group. The setting group can be changed via the hotkey menu providing **Setting Group select via menu** is chosen.

Note: Setting groups comprise both Settings and Programmable Scheme Logic. Each is independent per group - not shared as common. The settings are generated in the Settings and Records application within MiCOM S1 Studio, or can be applied directly from the relay front panel menu. The programmable scheme logic can only be set using the PSL Editor application within MiCOM S1 Studio, generating files with extension ".psl".

It is essential that where the installation needs application-specific PSL that the appropriate .psl file is downloaded (sent) to the relay, for each and every setting group that will be used. If the user fails to download the required .psl file to any setting group that may be brought into service, then factory default PSL will still be resident. This may have severe operational and safety consequences.

2.7 Control inputs

The control inputs function as software switches that can be set or reset either locally or remotely. These inputs can be used to trigger any function that they are connected to as part of the PSL. There are three setting columns associated with the control inputs which are: **CONTROL INPUTS**, **CTRL I/P CONFIG** and **CTRL I/P LABELS**. The function of these columns is described below:

Menu text	Default setting	Setting range	Step size
CONTROL INPUTS			
Ctrl I/P Status	00000000000000000000000000000000		
Control Input 1	No Operation	No Operation, Set, Reset	
Control Input 2 to 32	No Operation	No Operation, Set, Reset	

Table 10: Control inputs setting columns and their descriptions

The Control Input commands can be found in the **Control Input** menu. In the **Ctrl I/P status** menu cell there is a 32 bit word which represent the 32 control input commands. The status of the 32 control inputs can be read from this 32 bit word. The 32 control inputs can also be set and reset from this cell by setting a 1(set) or 0(reset). Alternatively, each of the 32 Control Inputs can be set and reset using the individual menu setting cells **Control Input 1, 2, 3** etc. The Control Inputs are available through the relay menu as described above and also via the rear communications.

In the programmable scheme logic editor 32 Control Input signals, DDB 608-639, which can be set to a logic 1 or On state, as described above, are available to perform control functions defined by the user.

The status of the Control Inputs are held in non-volatile memory (battery backed RAM) such that when the relay is power-cycled, the states are restored upon power-up.

Menu text	Default setting	Setting range	Step size
CTRL I/P CONFIG			
Hotkey Enabled	11111111111111111111111111111111		
Control Input 1	Latched	Latched, Pulsed	
Ctrl Command 1	SET/RESET	SET/RESET, IN/OUT, ENABLED/DISABLED, ON/OFF	
Control Input 2 to 32	Latched	Latched, Pulsed	
Ctrl Command 2 to 32	SET/RESET	SET/RESET, IN/OUT, ENABLED/DISABLED, ON/OFF	

Table 11: Control inputs commands

Menu text	Default setting	Setting range	Step size
CTRL I/P LABELS			
Control Input 1	Control Input 1	16 character text	
Control Input 2 to 32	Control Input 2 to 32	16 character text	

Table 12: Control inputs labels

The **CTRL I/P CONFIG** column has several functions one of which allows the user to configure the control inputs as either 'latched' or 'pulsed'. A latched control input will remain in the set state until a reset command is given, either by the menu or the serial communications. A pulsed control input, however, will remain energized for 10 ms after the set command is given and will then reset automatically (i.e. no reset command required).

In addition to the latched/pulsed option this column also allows the control inputs to be individually assigned to the **Hotkey** menu by setting **1** in the appropriate bit in the **Hotkey Enabled** cell. The hotkey menu allows the control inputs to be set, reset or pulsed without the need to enter the **CONTROL INPUTS** column. The **Ctrl Command** cell also allows the SET/RESET text, displayed in the hotkey menu, to be changed to something more suitable for the application of an individual control input, such as **ON / OFF, IN / OUT** etc.

The **CTRL I/P LABELS** column makes it possible to change the text associated with each individual control input. This text will be displayed when a control input is accessed by the hotkey menu, or it can be displayed in the PSL.

Note: With the exception of pulsed operation, the status of the control inputs is stored in battery backed memory. In the event that the auxiliary supply is interrupted the status of all the inputs will be recorded. Following the restoration of the auxiliary supply the status of the control inputs, prior to supply failure, will be reinstated. If the battery is missing or flat the control inputs will set to logic 0 once the auxiliary supply is restored.

2.8 Enhanced opto-input time stamping

Each opto-input sample is time stamped within a tolerance of ±1 ms with respect to the relay's Real Time Clock. These time stamps are used for the opto event logs and for the disturbance recording. The relay needs to be synchronized accurately to an external clock source such as the GPS clock and the synchronization consists of IRIG-B and SNTP through Ethernet communication. The P24x time synchronization accuracy is 1 ms through IRIG-B (both modulated and de-modulated) and SNTP. The total time stamping accuracy, with reference to an external clock source, also takes the time synchronization accuracy into consideration.

For both the filtered and unfiltered opto inputs, the time stamp of an opto change event is the sampling time at which the opto change of state has occurred. If a mixture of filtered and unfiltered opto inputs change state at the same sampling interval, then two events are logged in the event file, the first event corresponds to the unfiltered opto input and the second event corresponds to the filtered opto input. The enhanced opto event time stamping is consistent across all the implemented protocols. The GOOSE messages are published in a timely manner and are not delayed by any event filtering mechanism that is used to align the event time stamps.

2.9 PSL DATA column

The MiCOM P24x range of relays contains a PSL DATA column that can be used to track PSL modifications. A total of 12 cells are contained in the PSL DATA column, 3 for each setting group. The function for each cell is shown below:

Grp PSL Ref	When downloading a PSL to the relay, the user will be prompted to enter which groups the PSL is for and a reference ID. The first 32 characters of the reference ID will be displayed in this cell. The ⟨ and ⟩ . keys can be used to scroll through 32 characters as only 16 can be displayed at any one time.
18 Nov 2002 08:59:32.047	This cell displays the date and time when the PSL was down loaded to the relay.
Grp 1 PSL ID – 2062813232	This is a unique number for the PSL that has been entered. Any change in the PSL will result in a different number being displayed.

Note: The above cells are repeated for each setting group.

2.10 Reset of programmable LEDs and output contacts

The programmable LEDs and output contacts can be set to be latched in the programmable scheme logic. If there is a fault record then clearing the fault record by pressing the ˜ key once the fault record has been read will clear any latched LEDs and output contacts. If there is no fault record, then as long as the initiating signal to the LED or output contact is reset the LEDs and contacts can be reset by one of the two following methods.

- Via the **View Records - Reset Indications** menu command cell
- Via DDB 113 **Reset Latches** which can be mapped to an Opto Input or a Control Input for example

2.11 Real time clock synchronization via opto-inputs

In modern protective schemes it is often desirable to synchronize the relays real time clock so that events from different relays can be placed in chronological order. This can be done using the IRIG-B input, if fitted, or via the communication interface connected to the substation control system. In addition to these methods the P24x range offers the facility to synchronize via an opto-input by routing it in PSL to DDB 116 (Time Sync.). Pulsing this input will result in the real time clock snapping to the nearest minute if the pulse input is ± 3 s of the relay clock time. If the real time clock is within 3 s of the pulse the relay clock will crawl (the clock will slow down or get faster over a short period) to the correct time. The recommended pulse duration is 20 ms to be repeated no more than once per minute. An example of the time sync function is shown below:

OP

Time of "Sync. Pulse"	Corrected time
19:47:00 to 19:47:29	19:47:00
19:47:30 to 19:47:59	19:48:00

Table 13: Example of time sync by using opto-inputs

Note: The above assumes a time format of hh:mm:ss

To avoid the event buffer from being filled with unnecessary time sync. events, it is possible to ignore any event that generated by the time sync. opto input. This can be done by applying the following settings:

Menu text	Value
RECORD CONTROL	
Opto Input Event	Enabled
Protection Event	Enabled
DDB 064 - 079 (Opto Inputs)	Set "Time Sync." associated opto to 0

Table 14: Setting example to avoid event buffer overflow

To improve the recognition time of the time sync. opto input by approximately 10 ms, the opto input filtering could be disabled. This is achieved by setting the appropriate bit to 0 in the **Opto Filter Cntl** cell in the **OPTO CONFIG** column.

Disabling the filtering may make the opto input more susceptible to induced noise. Fortunately the effects of induced noise can be minimized by using the methods described in section 2.3.3 of the Firmware Design chapter (*P24x/EN FD*).

2.12 Read only mode

With IEC 61850 and Ethernet / Internet communication capabilities, security has become a pressing issue. The Px40 relay provides a facility to allow the user to enable or disable the change in configuration remotely. This feature is available only in relays with Courier, Courier with IEC 60870-5-103, Courier with IEC 61850 and Courier with IEC 60870-5-103 and IEC 61850 protocol options. It has to be noted that in IEC 60870-5-103 protocol, Read Only Mode function is different from the existing Command block feature.

2.12.1 Protocol / port Implementation:

2.12.1.1 IEC 60870-5-103 protocol on rear port 1:

The protocol does not support settings but the indications, measurands and disturbance records commands are available at the interface.

Allowed:

Poll Class 1 (read spontaneous events)
Poll Class 2 (read measurands)
GI sequence (ASDU7 'Start GI', Poll Class 1)
Transmission of Disturbance Records sequence (ASDU24, ASDU25, Poll Class 1)
Time Synchronization (ASDU6)
General Commands (ASDU20), namely:
- INF23 activate characteristic 1
- INF24 activate characteristic 2
- INF25 activate characteristic 3
- INF26 activate characteristic 4

Blocked:

Write parameter (=change setting) (private ASDUs)
General Commands (ASDU20), namely:
- INF16 auto-recloser on/off
- INF19 LED reset
- Private INFs (e.g CB open/close, Control Inputs)

OP

2.12.1.2 Courier protocol on rear port 1/2 and Ethernet

Allowed:

- Read settings, statuses, measurands

Read records (event, fault, disturbance)
- Time Synchronization
- Change active setting group

Blocked:

Write settings
All controls, including:
- Reset Indication (Trip LED)
- Operate Control Inputs
- CB operations
- Auto-reclose operations
- Reset demands
- Clear event / fault / maintenance / disturbance records
- Test LEDs & contacts

2.12.1.3 IEC 61850

Allowed:

- Read statuses, measurands
- Generate Reports
- Extract Disturbance Records
- Time Synchronization
- Change active setting group

Blocked:

All controls, including:
Enable / Disable protection
Operate Control Inputs
CB operations (Close / Trip, Lock)
Reset LEDs

2.12.1.4 Courier database support

Three new settings, one for each remote communications port at the back of the relay are created to support the enabling and disabling of the read only mode at each port.

The **NIC Read Only** setting will apply to all the communications protocols (including the Tunnelled Courier) that are transmitted via the Ethernet Port. Their default values are 'Disabled'.

The Modbus and DNP3 communications interfaces that do not support the feature will ignore these settings.

2.12.2 New DDB signals

The remote read only mode is also available in the PSL via three dedicated DDB signals:-

- RP1 Read Only
- RP2 Read Only
- NIC Read Only

Through careful scheme logic design, the activations of these read only signals can be facilitated via Opto Inputs, Control Inputs and Function Keys.

These DDBs are available in every build, however they are effective only in Courier, IEC 60870-5-103 build and in latest IEC 61850 (firmware version 42 onwards). The setting cells are not available in Modbus and DNP3.0.

2.13 Any trip

The **Any Trip** DDB (DDB 371) is a combination of all the individual trip signals. This DDB has been made independent from relay 3 in the version C2.0 software and later. In the previous versions of software the **Any Trip** signal was the operation of Relay 3. In the version C2.0 software and later DDB371 is the **Any Trip** signal and any output contact used for tripping can be connected to the **Any Trip** DDB leaving Relay 3 to be freely assigned for any function. The **Any Trip** signal affects the following functions:

- Operates the Trip LED
- Triggers CB condition maintenance counters
- Used to measure the CB operating time
- Triggers the circuit breaker failure logic
- Used in the Fault recorder logic

In the default PSL, Relay 3 is still mapped to the **Any Trip** DDB and **Trip LED** DDB as well as the **Fault REC TRIG** DDB signals as shown in the PSL diagram below.

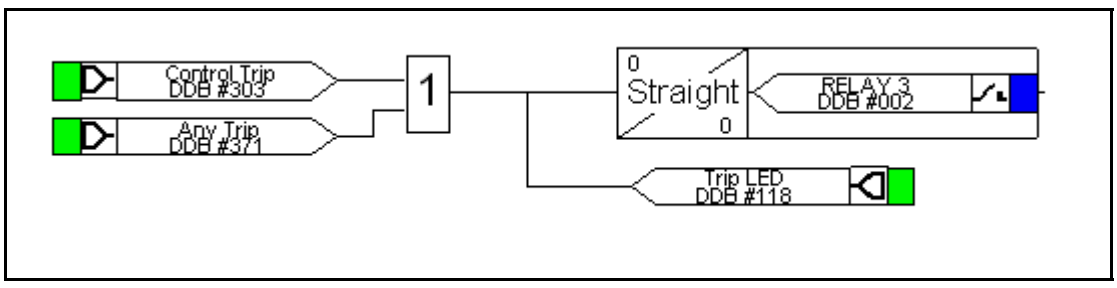

Figure 52: Default PSL showing Any Trip mapping

The new **Trip LED** DDB (DDB118) allows (in PSL) switching on Trip LED for a particular trip signal concerned. An example is shown below.

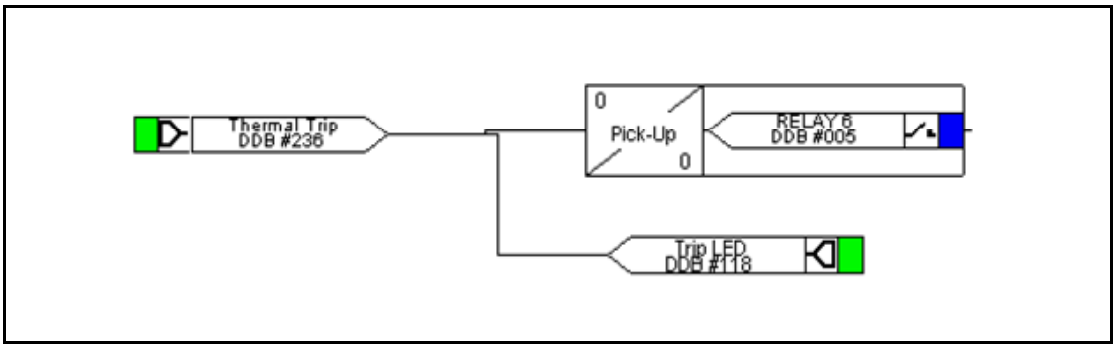

Figure 53: Example of using Trip LED

In the scheme shown above the trip relay is relay 6 and only the thermal trip will provoke a Trip, and the Trip LED will be switched on only with the thermal Trip.

2.14 Function keys (P242/3)

The P242/3 relay offers users 10 function keys for programming any operator control functionality such as Reset latched Relays/LEDS/Alarms, Select Group 2 etc. via PSL. Each function key has an associated programmable tri-color LED that can be programmed to give the desired indication on function key activation.

These function keys can be used to trigger any function that they are connected to as part of the PSL. The function key commands can be found in the **Function Keys** menu (see Settings chapter, *P24x/EN ST*). In the **Fn. Key Status** menu cell there is a 10 bit word which represent the 10 function key commands and their status can be read from this 10 bit word.

OP

In the programmable scheme logic editor 10 function key signals, DDB 676-685, which can be set to a logic 1 or On state, as described above, are available to perform control functions defined by the user.

The **Function Keys** column has the **Fn. Key n Mode** cell which allows the user to configure the function key as either **Toggled** or **Normal**. In the **Toggled** mode the function key DDB signal output will remain in the set state until a reset command is given, by activating the function key on the next key press. In the **Normal** mode, the function key DDB signal will remain energized for as long as the function key is pressed and will then reset automatically. A minimum pulse duration can be programmed for a function key by adding a minimum pulse timer to the function key DDB output signal.

The **Fn. Key n Status** cell is used to enable/unlock or disable the function key signals in PSL. The **Lock** setting has been specifically provided to allow the locking of a function key thus preventing further activation of the key on consequent key presses.

This allows function keys that are set to **Toggled** mode and their DDB signal active 'high', to be locked in their active state thus preventing any further key presses from deactivating the associated function. Locking a function key that is set to the **Normal** mode causes the associated DDB signals to be permanently off. This safety feature prevents any inadvertent function key presses from activating or deactivating critical relay functions.

The **Fn. Key Labels** cell makes it possible to change the text associated with each individual function key. This text will be displayed when a function key is accessed in the function key menu, or it can be displayed in the PSL.

The status of the function keys is stored in battery backed memory. In the event that the auxiliary supply is interrupted the status of all the function keys will be recorded. Following the restoration of the auxiliary supply the status of the function keys, prior to supply failure, will be reinstated. If the battery is missing or flat the function key DDB signals will set to logic 0 once the auxiliary supply is restored.

Note: The relay will only recognize a single function key press at a time and that a minimum key press duration of approximately 200 msec. is required before the key press is recognized in PSL. This de-glitching feature avoids accidental double presses.

2.15 Phase rotation

2.15.1 Description

A facility is provided in the P241/242/243 to maintain correct operation of all the protection functions even when the motor is running in a reverse phase sequence. This is achieved through user configurable settings available for the two setting groups.

The default phase sequence for P24x is the clockwise rotation ABC. However, some applications may require an intermediate anti-clockwise phase rotation of ACB.

In process industry there is often a common practice to reverse two phases to facilitate the process, using phase reversal switches. The following sections describe some common scenarios and their effects.

2.15.2 Phase reversal switches affecting all CTs and VTs

The phase reversal affects all the voltage and current measurements in the same way, irrespective of which two phases are being swapped. This is also equivalent to a power system that is permanently reverse phase reversed.

All the protection functions that use the positive and negative sequence component of voltage and current will be affected (Thermal Overload, 3 Ph Volt Check, Negative Sequence O/C, VT Supervision). The motor differential protection is not affected, since the phase reversal applies to CT1 and CT2 in the same way.

OP

The relationship between voltages and currents from CT for the standard phase rotation and reverse phase rotation are as shown below.

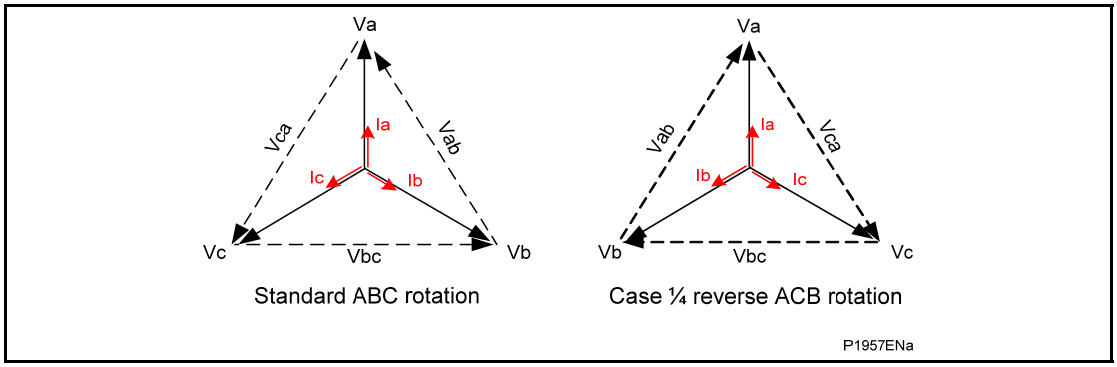

Figure 54: Standard and reverse phase rotation

2.15.2.1 System config settings

The following settings are available in the **SYSTEM CONFIG** menu as follows. These new settings are available for each of the two protection setting groups.

Menu text	Default setting	Setting range		Step size
		Min.	Max.	
System Config				
Phase Sequence	Standard ABC	Standard ABC, Reverse ACB		N/A

Table 15: Phase rotation setting in SYSTEM CONFIG

The Phase Sequence setting applies to a power system that has a permanent phase sequence of either ABC or ACB. It is also applicable for temporary phase reversal which affects all the VTs and CTs. As distinct from the other phase reversal settings, this setting does not perform any internal phase swapping of the analogue channels.

The Phase Sequence setting affects the sequence component calculations as follows:

Standard ABC	The calculations of positive (I1, V1) and negative (I2, V2) phase sequence voltage and current remain unchanged as follows: $\overline{X_1} = \frac{1}{3}\left(\overline{X_a} + \alpha\overline{X_b} + \alpha^2\overline{X_c}\right)$ $\overline{X_2} = \frac{1}{3}\left(\overline{X_a} + \alpha^2\overline{X_b} + \alpha\overline{X_c}\right)$
Reverse ACB	The calculations of positive (I1, V1) and negative (I2, V2) phase sequence voltage and current are given by the equations: $\overline{X_1} = \frac{1}{3}\left(\overline{X_a} + \alpha^2\overline{X_b} + \alpha\overline{X_c}\right)$ $\overline{X_2} = \frac{1}{3}\left(\overline{X_a} + \alpha\overline{X_b} + \alpha^2\overline{X_c}\right)$

Where: $\alpha = 1\angle 120^\circ$

OP

AP

APPLICATION NOTES

Date:	**24th November 2009**
Hardware suffix:	**J (P241) K (P242/3)**
Software version:	**57**
Connection diagrams:	**10P241xx (xx = 01 to 02)** **10P242xx (xx = 01 to 01)** **10P243xx (xx = 01 to 01)**

AP

CONTENTS

1	**INTRODUCTION**	**9**
1.1	**Protection of asynchronous and synchronous motors**	**9**
1.2	**Introduction to the P24x relay**	**9**
2	**APPLICATION OF INDIVIDUAL PROTECTION FUNCTIONS**	**10**
2.1	**Motor differential protection (P243 only) (87)**	**10**
2.1.1	Setting guidelines for biased differential protection	10
2.1.2	Setting guidelines for high impedance differential protection	11
2.1.3	Setting guidelines for the self balance winding differential	14
2.2	**Thermal overload protection (49)**	**14**
2.2.1	Introduction	14
2.2.2	Thermal replica	15
2.2.3	Setting guidelines for thermal overload	16
2.2.3.1	Thermal setting Ith	16
2.2.3.2	K coefficient	17
2.2.3.3	Thermal time constants	17
2.2.4	Thermal state modification	18
2.2.5	Thermal probe influence	20
2.2.6	Specific applications	20
2.2.6.1	Inhibition of the thermal trip during starting	20
2.2.6.2	Emergency restart	20
2.2.6.3	Thermal alarm	21
2.2.6.4	Lockout threshold	21
2.3	**Resistive temperature detectors**	**21**
2.3.1	RTD thermal protection features	21
2.3.2	RTD thermal protection settings	21
2.4	**Short circuit protection (50/51)**	**22**
2.4.1	Setting guidelines	22
2.4.2	Setting example	23
2.5	**Earthfault protection (50N/51N/67N/32N/64N)**	**23**
2.5.1	Solidly earthed system	25
2.5.1.1	Principle	25
2.5.1.2	Typical settings	25
2.5.2	Insulated system	26
2.5.2.1	Principle	26
2.5.2.2	Setting guidelines	29
2.5.3	Resistance earthed systems	29
2.5.3.1	Setting guidelines	29
2.5.3.2	High resistance earthing	29

2.5.4 Petersen coil earthed systems 30
2.5.4.1 Principle 30
2.5.4.2 Operation of sensitive earth fault element 35
2.5.5 Wattmetric characteristic 36
2.5.5.1 Principle 36
2.5.5.2 Application considerations 37
2.5.5.3 Calculation of required relay settings : 37
2.6 Residual overvoltage (neutral displacement) protection (59N) 37
2.6.1 Setting guidelines 40
2.7 Negative sequence protection (46) 40
2.7.1 Loss of one phase while starting & running 42
2.7.1.1 Principle 42
2.7.1.2 Setting guidelines 43
2.7.2 3 Phase voltage check (reverse phase detection) (47/27) 43
2.7.2.1 Principle 43
2.7.2.2 Setting guidelines 43
2.8 Start / stall protection (48/51LR/50S/14) 43
2.8.1 Excessive start time/locked rotor protection - stall time > start time (51LR) 44
2.8.1.1 Setting guidelines 44
2.8.2 Stall protection (50S) 44
2.8.2.1 Principle 44
2.8.2.2 Setting guidelines 44
2.8.3 Excessive start time/locked rotor protection - stall time < start time (14) 45
2.8.3.1 Setting guidelines 45
2.8.4 Number of starts limitation (66) 45
2.8.5 Anti-Backspin protection (27 Abs) 46
2.8.6 Setting guidelines for ABS protection 46
2.8.7 Low voltage protection (re-acceleration) 46
2.9 Undervoltage protection function (27) 46
2.9.1 Principle 46
2.9.2 Setting guidelines for undervoltage protection 47
2.10 Loss-of-load protection (37) 47
2.10.1 Principle 47
2.10.2 Setting guidelines 47
2.11 Synchronous motor protection 48
2.11.1 Out-of-step protection (under power factor) (55) 48
2.11.2 Reverse power (loss-of-supply) (32R) 48
2.11.2.1 Under-frequency (81U) 48
2.11.3 Setting guidelines : 49
2.11.3.1 Overvoltage (59) 49
2.11.3.2 Setting guidelines : 49
2.12 Field failure protection function (40) 49

AP

2.12.1 Setting guidelines for field failure protection 50
2.12.1.1 Impedance element 1 50
2.12.1.2 Impedance element 2 51
2.12.1.3 Power factor element 51
2.13 Circuit breaker failure protection (50BF) 51
2.13.1 Breaker failure protection configurations 51
2.13.2 Reset mechanisms for breaker fail timers 52
2.13.3 Typical breaker fail timer settings 53
2.14 Current loop inputs and outputs 53
2.14.1 Current loop inputs 53
2.14.2 Setting guidelines for current loop inputs 53
2.14.3 Current loop outputs 54
2.14.4 Setting guidelines for current loop outputs 54
2.15 Phase rotation 55
3 APPLICATION OF NON-PROTECTION FUNCTIONS 56
3.1 VT supervision 56
3.1.1 Setting the VT supervision element 56
3.2 CT supervision 56
3.2.1 Setting the CT supervision element 57
3.3 Trip circuit supervision (TCS) 57
3.3.1 TCS scheme 1 57
3.3.1.1 Scheme description 57
3.3.2 Scheme 1 PSL 58
3.3.3 TCS scheme 2 58
3.3.3.1 Scheme description 58
3.3.4 Scheme 2 PSL 59
3.3.5 TCS scheme 3 59
3.3.5.1 Scheme description 59
3.3.6 Scheme 3 PSL 60
4 CURRENT TRANSFORMER REQUIREMENTS 61
4.1 Motor differential function (P243) 61
4.1.1 Biased differential protection 61
4.2 Non-directional definite time/IDMT short circuit and definite time/IDMT derived earth fault protection 62
4.2.1 Definite time/IDMT delayed short circuit elements 62
4.2.2 Definite time delayed/IDMT derived earth fault elements 62
4.3 Non-directional instantaneous short circuit and derived earth fault protection 62
4.3.1 Instantaneous short circuit elements 62
4.3.2 Instantaneous derived earth fault elements 62
4.4 Directional definite time/IDMT derived earth fault protection 62
4.4.1 Directional time delayed derived earth fault protection 62
4.4.2 Directional instantaneous derived earth fault protection 62

AP

4.5 Non-directional/directional definite time/IDMT sensitive earth fault (SEF) protection 62
4.5.1 Non-directional time delayed SEF protection (residually connected) 62
4.5.2 Non-directional instantaneous SEF protection (residually connected) 62
4.5.3 Directional time delayed SEF protection (residually connected) 63
4.5.4 Directional instantaneous SEF protection (residually connected) 63
4.5.5 SEF protection - as fed from a core-balance CT 63
4.6 Converting an IEC185 current transformer standard protection classification to a kneepoint voltage 63
4.7 Converting IEC185 current transformer standard protection classification to an ANSI/IEEE standard voltage rating 64

5 READ ONLY MODE 65

6 AUXILIARY SUPPLY FUSE RATING 66

FIGURES

Figure 1: Example of settings 18
Figure 2: Thermal curve modification 19
Figure 3: Definite time overcurrent element 22
Figure 4: Core balanced CT with cable 24
Figure 5: Fuse characteristic 26
Figure 6: Current distribution in an insulated system with C phase fault 27
Figure 7: Phasor diagrams for insulated system with C phase fault 28
Figure 8: Directional tripping characteristic 30
Figure 9: Current distribution in Petersen coil earthed system 31
Figure 10: Distribution of currents during a C phase to earth fault 32
Figure 11: Theoretical case - no resistance present in XL or XC 33
Figure 12: Theoretical case - no resistance present in XL or XC 34
Figure 13: Practical case:- resistance present in XL and Xc 35
Figure 14: Resistive components of spill current 36
Figure 15: Residual voltage 39
Figure 16: Residual voltage 40
Figure 17: Equivalent circuits 41
Figure 18: TCS scheme 1 57
Figure 19: PSL for TCS schemes 1 and 3 58
Figure 20: TCS scheme 2 58
Figure 21: PSL for TCS scheme 2 59
Figure 22: TCS scheme 2 59

AP

TABLES

Table 1: Recommended characteristics and types of Metrosil units to be used with 1 Amp CTs 13

Table 2: Recommended characteristics and types of Metrosil units to be used with 5 Amp CTs 13

Table 3: Specific motor parameters used to help illustrate how to determine the P24x settings 17

Table 4: Reduction of per unit power delivered by motors relative to the ambient temperature 20

Table 5: Correction coefficients used by the relay to offset the thermal replica at different ambient temperatures 20

Table 6: Typical operating temperatures of a healthy plan 21

Table 7: Standard IDMT curve constant values 23

Table 8: CBF resetting options 53

Table 9: Typical CBF timer settings 53

Table 10: description needed? Recommended resistor value and opto voltage settings 58

Table 11: Recommended resistor value and opto voltage settings 60

Table 12: The CT requirements for the P24x protection functions excluding differential protection 61

Table 13: Auxiliary supplies and the corresponding fuse ratings 66

AP

1 INTRODUCTION

1.1 Protection of asynchronous and synchronous motors

Both asynchronous (induction) and synchronous motors perform a vital role in many industrial processes throughout the world, a vast majority of which would be unable to function without such a device. Clearly, loss of a motor through damage incurs much more than a possible electrical rewind but also a stop in an electrical process, resulting in expensive plant down time. This problem may be exacerbated by the damaged machine being positioned in an inaccessible position, such as an awkward corner of a factory or by a spare not being readily available. Therefore prior warning of a problem is vitally important to reduce the impact on a process resulting from a faulted motor.

Comprehensive protection relays, such as the P24x, can be used to protect a motor from catastrophic failure, or possibly give the operator prior warning of a problem, which may in turn reduce plant down time. Any protective device, though reliable in operation under abnormal conditions, must not affect the continuous operation of the motor under normal operating conditions.

Unfortunately, motor characteristics vary greatly depending upon their precise application. Each application therefore requires careful consideration regarding the specification and setting of the motor protection. For example, starting and stalling currents and times must be known when applying overload protection, and furthermore the thermal withstand of the machine under balanced and unbalanced loading must be defined.

The conditions which motor protection may be required to detect can be divided into two broad categories; imposed external conditions and internal faults. The former category includes unbalanced supply voltages, undervoltages, single phasing and reverse phase sequence starting, and in the case of synchronous machines only, loss of synchronism. The latter category includes bearing failures, internal shunt faults (which are commonly earth faults), and overloads.

1.2 Introduction to the P24x relay

The MiCOM Px40 relay range uses the latest numerical technology and includes devices designed for the protection of a wide range of power system plant such as motors, generators, feeders, overhead lines and cables.

These relays are designed around a common hardware and software platform in order to achieve a high degree of commonality between products. One such product in the range is the Motor Protection Relay. This relay has been designed to cater for the protection of both asynchronous and synchronous motors, which may require extensive protection.

The relay also includes a comprehensive range of non-protection features to aid with power system diagnosis and fault analysis. All these features can be accessed remotely from one of the relays remote, serial communications options.

2 APPLICATION OF INDIVIDUAL PROTECTION FUNCTIONS

The following sections detail the individual protection functions in addition to where and how they may be applied.

2.1 Motor differential protection (P243 only) (87)

Failure of stator windings, or connection insulation, can result in severe damage to the windings and the stator core. The extent of the damage will depend upon the fault current level and the duration of the fault. Protection should be applied to limit the degree of damage in order to limit repair costs.

The MiCOM P243 provides motor differential protection. This form of unit protection allows discriminative detection of winding faults, with no intentional time delay, where a significant fault current arises. The zone of protection, defined by the location of the CTs, should be arranged to overlap protection for other items of plant, such as a busbar or transformer.

Heavy through current, arising from an external fault condition, can cause one CT to saturate more than the other, resulting in a difference between the secondary current produced by each CT. It is essential to stabilize the protection for these conditions. Three methods are commonly used:

A biasing technique, where the relay setting is raised as through-current increases.

A high impedance technique, where the relay impedance is such that under maximum through-fault conditions, the current in the differential element is insufficient for the relay to operate.

A self balance type differential protection arrangement.

Note: If the conductors are placed reasonably concentric within the window of the core balance current transformers, spill current can be kept to a minimum. With this low spill current and a reasonably independence of CT ratio to full load a lower fault setting could be achieved than conventional high impedance circulating current differential schemes.

The motor differential protection function available in the P24x relay can be used in either biased differential or high impedance differential mode.

Note: The high impedance mode can be used to achieve a self balance scheme. Both modes of operation are equally valid; users may have a preference for one over the other. The operating principle of each is described in the Operation chapter, *P24x/EN OP*.

2.1.1 Setting guidelines for biased differential protection

To select biased differential protection the **Diff Function** cell should be set to **Percentage Bias**.

The differential current setting, **Diff Is1**, should be set to a low setting to protect as much of the machine winding as possible. A setting of 5% of rated current of the machine is generally considered to be adequate. **Diff Is2**, the threshold above which the second bias setting is applied, should be set to 120% of the machine rated current.

The initial bias slope setting, **Diff k1**, should be set to 0% to provide optimum sensitivity for internal faults. The second bias slope, **Diff k2** may typically be set to 150% to provide adequate stability for external faults.

These settings may be increased where low accuracy class CTs are used to supply the protection.

2.1.2 Setting guidelines for high impedance differential protection

To select high impedance differential protection the **Diff Function** cell should be set to **High Impedance**.

The differential current setting, **Diff Is1**, should be set to a low setting to protect as much of the machine winding as possible. A setting of 5% of rated current of the machine is generally considered to be adequate. This setting may need to be increased where low accuracy class CTs are used to supply the protection. A check should be made to ensure that the primary operating current of the element is less than the minimum fault current for which the protection should operate.

The primary operating current (Iop) will be a function of the current transformer ratio, the relay operating current (**Diff Is1**), the number of current transformers in parallel with a relay element (n) and the magnetizing current of each current transformer (Ie) at the stability voltage (Vs). This relationship can be expressed in three ways:

To determine the maximum current transformer magnetizing current to achieve a specific primary operating current with a particular relay operating current.

$$I_e < \frac{1}{n} \times \left(\frac{I_{OP}}{CT.Ratio} - Mot.Diff.REF > I_S1 \right)$$

To determine the maximum relay current setting to achieve a specific primary operating current with a given current transformer magnetizing current.

$$Mot.Diff.I_S1 < \left(\frac{I_{OP}}{CT.Ratio} - nI_e \right)$$

To express the protection primary operating current for a particular relay operating current and with a particular level of magnetizing current.

$$I_{OP} = \left(CT.Ratio\right) \times \left(Mot.Diff.I_S1 + nI_e\right)$$

To achieve the required primary operating current with the current transformers that are used, a current setting (Diff Is1) must be selected for the high impedance element, as detailed in expression (ii) above. The setting of the stabilizing resistor (RST) must be calculated in the following manner, where the setting is a function of the required stability voltage setting (Vs) and the relay current setting (Diff Is1).

$$R_{ST} = \frac{V_S}{Mot.Diff.I_S1} .... = ... \frac{1.5 \times I_F \times \left(R_{CT} + 2RL\right)}{Mot.Diff.I_S1}$$

Note: The above formula assumes negligible relay burden.

USE OF “METROSIL” NON-LINEAR RESISTORS

Metrosils are used to limit the peak voltage developed by the current transformers under internal fault conditions, to a value below the insulation level of the current transformers, relay and interconnecting leads, which are normally able to withstand 3000 V peak.

The following formulae should be used to estimate the peak transient voltage that could be produced for an internal fault. The peak voltage produced during an internal fault will be a function of the current transformer kneepoint voltage and the prospective voltage that would be produced for an internal fault if current transformer saturation did not occur. This prospective voltage will be a function of maximum internal fault secondary current, the current transformer ratio, the current transformer secondary winding resistance, the current transformer lead resistance to the common point, the relay lead resistance and the stabilizing resistor value.

$$Vp = 2\sqrt{2V_k \left(V_f - V_k \right)}$$

$$Vf = I'f \left(R_{CT} + 2R_L + R_{ST}\right)$$

AP

Where:

V_p = Peak voltage developed by the CT under internal fault conditions.

V_k = Current transformer knee-point voltage.

V_f = Maximum voltage that would be produced if CT saturation did not occur.

I'_f = Maximum internal secondary fault current.

R_{CT} = Current transformer secondary winding resistance.

R_L = Maximum lead burden from current transformer to relay.

R_{ST} = Relay stabilizing resistor.

When the value given by the formulae is greater than 3000 V peak, Metrosils should be applied. They are connected across the relay circuit and serve the purpose of shunting the secondary current output of the current transformer from the relay in order to prevent very high secondary voltages.

Metrosils are externally mounted and take the form of annular discs. Their operating characteristics follow the expression:

$V = CI^{0.25}$

Where:

V = Instantaneous voltage applied to the non-linear resistor (“Metrosil”).

C = Constant of the non-linear resistor (“Metrosil”).

I = Instantaneous current through the non-linear resistor (“Metrosil”).

AP

With a sinusoidal voltage applied across the Metrosil, the RMS current would be approximately 0.52x the peak current. This current value can be calculated as follows:

$$I(rms) = 0.52 \left(\frac{Vs\ (rms) \times \sqrt{2}}{C} \right)^4$$

Where:

Vs(rms) = rms value of the sinusoidal voltage applied across the Metrosil.

This is due to the fact that the current waveform through the non-linear resistor (“Metrosil”) is not sinusoidal but appreciably distorted.

For satisfactory application of a non-linear resistor (“Metrosil”), its characteristic should be such that it complies with the following requirements:

1. At the relay voltage setting, the non-linear resistor (“Metrosil”) current should be as low as possible, but no greater than approximately 30 mA rms. for 1 A current transformer and approximately 100 mA rms. for 5 A current transformers.
2. At the maximum secondary current, the non-linear resistor (“Metrosil”) should limit the voltage to 1500 V rms or 2120 V peak for 0.25 second. At higher relay voltage settings, it is not always possible to limit the fault voltage to 1500 V rms., so higher fault voltages may have to be tolerated.

The following tables show the typical Metrosil types that will be required, depending on relay current rating, REF voltage setting etc.

Metrosil Units for Relays with a 1 Amp CT

The Metrosil units with 1 Amp CTs have been designed to comply with the following restrictions:

3. At the relay voltage setting, the Metrosil current should less than 30 mA rms.
4. At the maximum secondary internal fault current the Metrosil unit should limit the voltage to 1500 V rms if possible.

The Metrosil units normally recommended for use with 1 Amp CTs are as shown in the following table:

Relay voltage setting	Nominal characteristic		Recommended metrosil type	
	C	β	Single pole relay	Triple pole relay
Up to 125 V rms	450	0.25	600 A/S1/S256	600 A/S3/1/S802
125 to 300 V rms	900	0.25	600 A/S1/S1088	600 A/S3/1/S1195

Table 1: Recommended characteristics and types of Metrosil units to be used with 1 Amp CTs

Note: Single pole Metrosil units are normally supplied without mounting brackets unless otherwise specified by the customer.

Metrosil Units for Relays with a 5 Amp CT

These Metrosil units have been designed to comply with the following requirements:

5. At the relay voltage setting, the Metrosil current should less than 100 mA rms (the actual maximum currents passed by the units shown below their type description.
6. At the maximum secondary internal fault current the Metrosil unit should limit the voltage to 1500 V rms for 0.25 secs. At the higher relay settings, it is not possible to limit the fault voltage to 1500 V rms hence higher fault voltages have to be tolerated (indicated by *, **, ***).

The Metrosil units normally recommended for use with 5 Amp CTs and single pole relays are as shown in the following table:

	Recommended METROSIL type			
Secondary internal fault current	Relay voltage setting			
Amps rms	Up to 200 V rms	250 V rms	275 V rms	300 V rms
50 A	600 A/S1/S1213 C = 540/640 35 mA rms	600 A/S1/S1214 C = 670/800 40 mA rms	600 A/S1/S1214 C = 670/800 50 mA rms	600 A/S1/S1223 C = 740/870* 50 mA rms
100 A	600 A/S2/P/S1217 C = 470/540 70 mA rms	600 A/S2/P/S1215 C = 570/670 75 mA rms	600 A/S2/P/S1215 C = 570/670 100 mA rms	600 A/S2/P/S1196 C = 620/740 100 mA rms *
150 A	600 A/S3/P/S1219 C = 430/500 100 mA rms	600 A/S3/P/S1220 C = 520/620 100 mA rms	600 A/S3/P/S1221 C= 570/670** 100 mA rms	600 A/S3/P/S1222 C = 620/740*** 100 mA rms

Table 2: Recommended characteristics and types of Metrosil units to be used with 5 Amp CTs

Note: *2400 V peak **2200 V peak ***2600 V peak

In some situations single disc assemblies may be acceptable, contact Schneider Electric for detailed applications.

7. The Metrosil units recommended for use with 5 Amp CTs can also be applied for use with triple pole relays and consist of three single pole units mounted on the same central stud but electrically insulated for each other. To order these units please specify "Triple Pole Metrosil Type", followed by the single pole type reference.
8. Metrosil units for higher relay voltage settings and fault currents can be supplied if required.

For further advice and guidance on selecting METROSILS please contact the Applications department at Schneider Electric.

2.1.3 Setting guidelines for the self balance winding differential

For this configuration, the relay must be set to **High Impedance** via the cell **Diff Function** in the **Differential** protection menu. The differential current setting, **Diff Is1**, should be set to a low setting to protect as much of the machine winding as possible. A setting of 5% of rated current of the machine is generally considered to be adequate.

If the conductors are placed reasonably concentric within the window of the core balance current transformers, spill current can be kept to a minimum. With this low spill current and a reasonably independence of CT ratio to full load a lower fault setting could be achieved than conventional high impedance circulating current differential schemes.

Disadvantages :

1. The necessity of passing both ends of each phase winding through the CT and hence the need for extra cabling on the neutral end.
2. To avoid long cabling, position of CTs are restricted to the proximity of the machine output terminals in which case the cable between the machine output terminals and controlling switchgear might not be included within the differential zone.

2.2 Thermal overload protection (49)

In order for the Thermal overload protection function to operate correctly, it is essential that the circuit breaker to be closed and its associated closing signal, 52a, to be recognized by the relay.

AP

2.2.1 Introduction

Overloads can result in stator temperature rises which exceed the thermal limit of the winding insulation. Empirical results suggest that the life of insulation is approximately halved for each 10°C rise in temperature above the rated value. The life of insulation is not wholly dependent upon the rise in temperature but on the time the insulation is maintained at this elevated temperature. Due to the relatively large heat storage capacity of an induction motor, infrequent overloads of short duration may not damage the machine. However, sustained overloads of a few per cent may result in premature ageing and failure of insulation.

The physical and electrical complexity of motor construction, their diverse applications, variety of possible abnormal operating conditions and the different modes of failure that may occur, result in a complex thermal relationship. It is not therefore possible to create an accurate mathematical model of the true thermal characteristics of the machine.

However, if a motor is considered to be a homogeneous body, developing heat internally at a constant rate and dissipating heat at a rate directly proportional to its temperature rise, it can be shown that the temperature at any instant is given by;

$T = T_{max} (1 – e^{-t/\tau})$

Where ;

T_{max} = Final steady state temperature,

τ = Heating time constant.

This assumes a thermal equilibrium in the form :

Heat developed = Heat stored + Heat dissipated

Temperature rise is proportional to the current squared :

$T = KI_R^2 (1 – e^{-t/\tau})$

Where ;

I_R = That current, which when left to flow continuously, would produce a temperature T_{max}, in the motor.

For an overload current 'I', the temperature is given by ;

$T = KI^2 (1 – e^{-t/\tau})$

For a motor not to exceed the rated temperature, then the time 't' for which the motor can withstand the current 'I' can be shown to be given by;

$t = \tau \text{ Ln } [1/\{1-(I_R/I)^2\}]$

An overload protection element should therefore satisfy the above relationship. The value of I_R may be the full load motor current or a percentage of it, depending on the motor design.

As previously stated, it is an oversimplification to regard a motor as a homogeneous body. The temperature rise of different parts, or even of various points in the same part, may be very uneven. However, it is reasonable to consider that the current-time relationship follows an inverse fashion. A more accurate representation of the thermal state of the motor can be obtained through the use of temperature monitoring devices (RTD's) which target these specific areas.

2.2.2 Thermal replica

The P24x relay models the time-current thermal characteristic of a motor by internally generating a thermal replica of the machine. The thermal overload protection can be selectively enabled or disabled. The positive or rms and negative sequence components of the load current are measured independently and are combined together to form an equivalent current, I_{eq}, which is supplied to this replica circuit. The heating effect in the thermal replica is produced by I_{eq}^2 and therefore takes into account the heating effect due to both positive or rms and negative sequence components of current.

The equivalent current for operation of the overload protection is in accordance with the following expressions;

$I_{eq} = \sqrt{(I1^2 + KI_2^2)}$

Note: This equation is used in software version A4.x (09) and before

$I_{eq} = \sqrt{(I_{RMS}^2 + KI_2^2)}$

Note: This equation is used in software version B1.0 (20) and later

Where ;

I_{RMS} = Root Mean Square current

I_1 = Positive sequence current

I_2 = Negative sequence current

K = A user settable constant proportional to the thermal capacity of the motor.

As previously described, the temperature of a motor will rise exponentially with increasing current. Similarly, when current decreases, the temperature also decreases in a similar manner. Therefore, in order to achieve close sustained overload protection, the P24x relay incorporates a wide range of thermal time constants. These allow the relay replica to closely match the protected motor during heating and cooling.

Furthermore, the thermal withstand capability of the motor is affected by heating in the winding prior to the fault. The thermal replica is designed to take into account the extremes of zero pre-fault current, known as the 'cold' condition, and full rated pre-fault current, known as the 'hot' condition. With no pre-fault current, the relay will be operating on the 'cold curve'. When a motor is, or has been, running at full load prior to a fault, the windings will already be dissipating heat and the 'hot curve' is applicable. Therefore, during normal operation, the relay will be operating within these two limits, unless programmed to do otherwise.

To protect the motor during all operating conditions, three independently adjustable time constants are employed in the overload curve:

T1 = Overload time constant applied when the current is between I_{th} & $2I_{th}$.

T2 = Overload time constant applied for currents above 2Ith.

Tr = Cooling time constant applied when the motor is stopped.

The following equation is used to calculate the trip time for a given current.

Note: The relay will trip at a value corresponding to 100% of its thermal state. The percentage of thermal capacity follows the relationship $\%\theta = (I_{eq}/I_{th})^2 \times 100$.

$t = T \text{ Ln } [(k^2 - A^2)/(k^2 - 1)]$

And the following equation is used to calculate the time it takes for the thermal alarm to be set.

$t_{alarm} = T \text{ Ln } [(k^2 – A^2)/(k^2 – (\text{Thermal Alarm}/100))]$

Where ;

$T = T1$ if $I_{th} < I_{eq} <= 2I_{th}$

$T = T2$ if $I_{eq} > 2I_{th}$

$T = Tr$ if $I_{eq} = 0$ (CB open)

$k = I_{eq}/I_{th}$

A = initial thermal state of the machine.

I_{th} = Thermal current setting

Thermal Alarm = Thermal alarm setting (20%-100%)

The time to trip varies depending on the load current carried before application of the overload, i.e. whether the overload was applied from “hot” or “cold”.

AP

2.2.3 Setting guidelines for thermal overload

2.2.3.1 Thermal setting I_{th}

The **I_{th} Current Set** setting chosen will depend on the type of motor being protected. Most machines are termed CMR (continuous maximum rating) motors. These motors are designed to carry the nameplate value or full load current continuously. A CMR motor may be run at some value less than its CMR and set to trip at its CMR.

Alternatively, if the machine is not a CMR motor, then the I_{th} setting will need to take into account the amount of overload, which can be tolerated, without resulting in thermal damage. A typical allowable overload may be in the region of 10% of rated temperature. It is important to realize that the temperature build up within the machine is approximately equal to the current squared, therefore a 10% temperature overload is equivalent to a 5% current overload.

Setting example :

The following motor parameters will be used to help illustrate how to determine the P24x settings;

Voltage	11 kV
Full load current	293 A
Starting current	470 %
Starting time	10 s
Heating time constant	20 min
Cooling time constant	100 min
Hot locked rotor withstand time	20 s
Cold locked rotor withstand time	30 s
CT Ratio	300 / 1

Voltage	11 kV
VT Ratio	11.5 kV / 110 V
Starting	D.O.L

Table 3: Specific motor parameters used to help illustrate how to determine the P24x settings

For this application we have assumed that the machine is a CMR motor and therefore the Ith setting is calculated as follows;

$I_{th} = I_{CMR}$ x (1/CT Ratio)

Where :

I_{CMR} = Continuous Motor Rating

Therefore : $I_{th} = 293 \times \frac{1}{300} = 0.976$ In

Therefore set : $I_{th} = 0.98$ In

2.2.3.2 K coefficient

The constant **K Coefficient** is used to increase the influence of negative sequence current on the thermal replica. This factor should be set equal to the ratio of negative phase sequence, rotor resistance to positive sequence resistance at rated speed. When an exact setting cannot be calculated, a default setting of 3 should be used. This is a typical setting and will suffice for the majority of applications.

Therefore set : **K Coefficient = 3**

AP

2.2.3.3 Thermal time constants

The relay heating and cooling time constants are set in accordance with the stator thermal heating and cooling time constants. The relay heating time constant (**Thermal Const T1**) should be set equal to, or as close as possible to, the stator heating thermal time constant, which is obtainable from the motor manufacturer. It is good practice to set T1 slightly less than the stator heating thermal time constant to allow for relay tolerances. However, this is not always necessary, since the stator thermal time constants provided by the motor manufacturer are usually conservative.

Thermal Const T2 is automatically applied above 2 I_{th} and is used to modify the relay thermal curve during starting for certain applications, for example, where star/delta starters are being utilized. During normal running, with the motor connected in delta, the current in the motor winding is only 57% of that monitored by the relay. However, during starting, with the motor connected in star, the current monitored by the relay is equal to the current in the motor winding. For this reason, T2 can be used to reduce the operating time of the relay during starting. For applications where direct on line (DOL) starting is utilized, T2 should be set equal to T1, resulting in one continuous thermal curve.

It is important to plot the chosen thermal characteristics on a time-current graph to ensure that the cold curve does not intersect the starting characteristic.

In certain applications, the thermal time constants may not be available. However, a graphical representation of these values may be given. In such applications, a stator heating time constant must be chosen, such that when plotted on a time-current graph, it closely matches the cold withstand curve of the motor.

Cooling Const Tr is the cooling time constant. This setting is important for cyclic operation of the motor, since precise information of the thermal state of the motor is required during heating and cooling. It is set as a multiple of T1 and should be set to the nearest value above the motor cooling time constant.

Setting Example :

For this particular application the stator thermal time constants of the motor are known, therefore the required time constant settings are as follows ;

Therefore set : **T1 = 20 minutes**

T2 = T1 since machine is DOL starting

Tr to 5 x T1 = 100 mins.

These settings are shown in Figure 1.

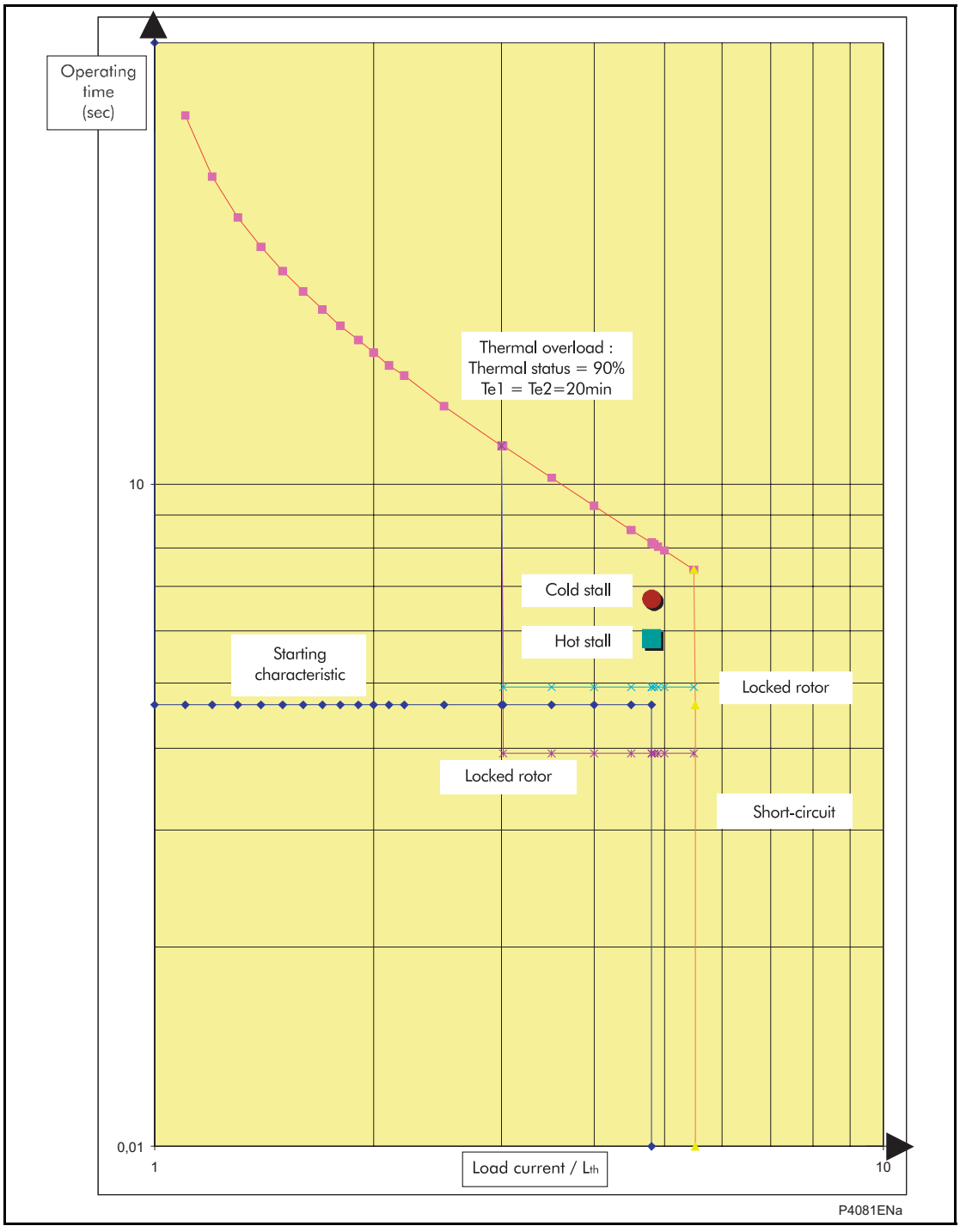

Figure 1: Example of settings

2.2.4 Thermal state modification

If a CMR induction motor is fully loaded, this is equivalent to a temperature of 100%, as far as the thermal replica is concerned. The motor protection relay will therefore normally be set to trip when the temperature reaches 100%. However, a stator temperature of 100% does not necessarily correspond to a rotor temperature of 100%; the rotor temperature could be as low as 50% of the permitted level. The main reason for this is that the rotor winding is able to dissipate the heat more efficiently than the stator winding, particularly with fan-driven, air-flow machines.

During starting, the slip will be low and both the stator and rotor currents will be high, thereby creating heat in both windings. However, a motor will usually be designed to allow one start when it has previously been run at a stator temperature not exceeding its rating.

From cold, the motor thermal replica characteristic will be on its 'cold' curve, with the highest tripping times. As the machine is run over a period of time, the projected thermal trip times will reduce, eventually reaching their minimum when operating on the 'hot' curve. Unfortunately, any rapid increase in current, for example a starting condition, may result in an unnecessary trip. This is shown in Figure 2.

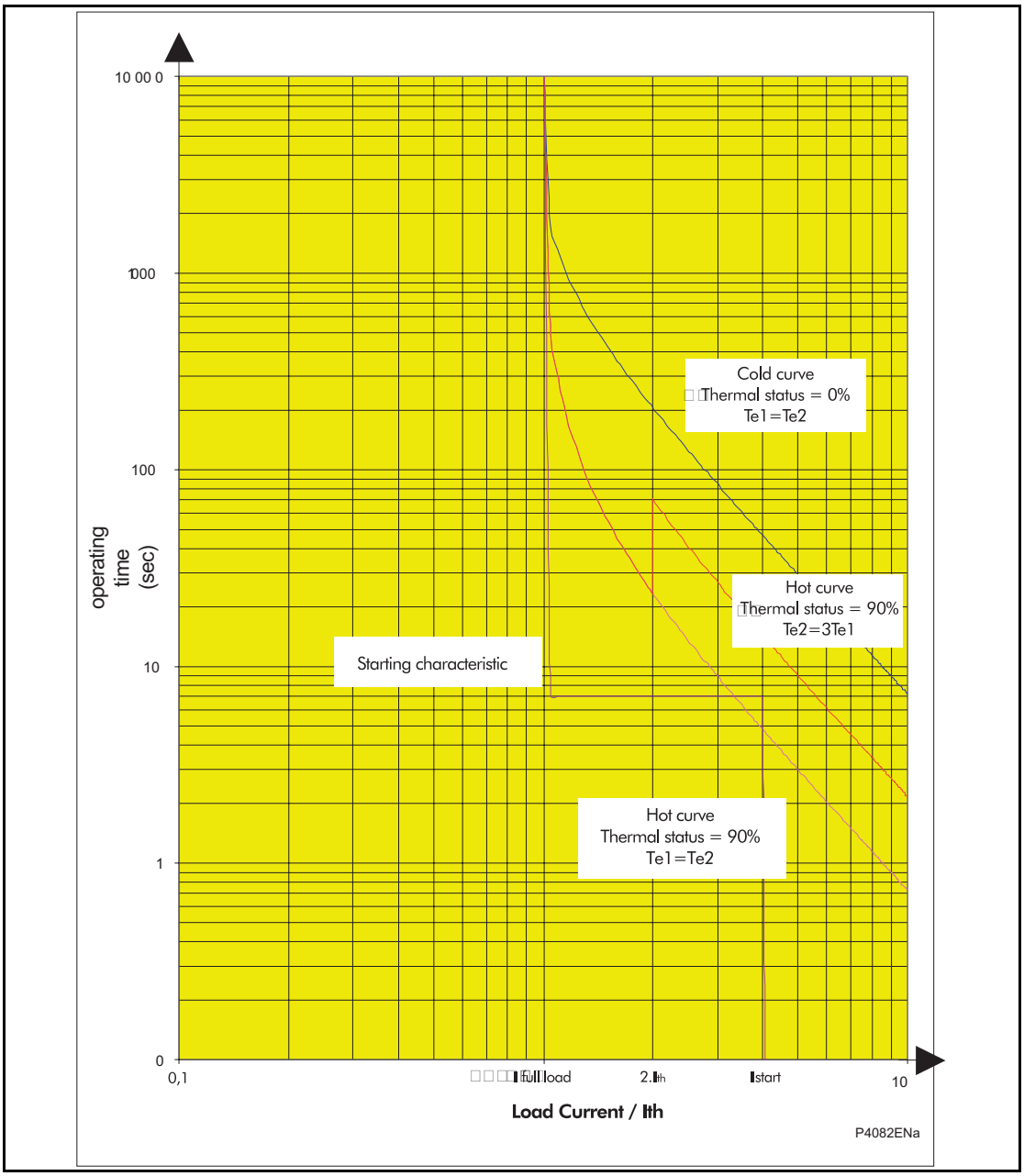

Figure 2: Thermal curve modification

In the past, motor manufacturers and end users have been aware of the limitation of the stator thermal model and the possible solution has been to oversize the machine. Clearly this is expensive.

The P24x relay incorporates a feature whereby the thermal curve may be modified to overcome this problem. Previously, it has been seen that the relay has a dual time constant (T1 and T2) characteristic for applications such as star/delta starting. In this example T2 was set to a lower value than T1. To enable a hot re-start, for a DOL machine, it may be necessary to set T2 to a higher value than T1 in order to avoid the starting characteristic. This is shown in Figure 2.

AP

2.2.5 Thermal probe influence

Motors are designed to operate within a specific ambient temperature. If the machine is operated in a higher ambient temperature than specified, the windings may overheat resulting in insulation deterioration, even if it is operating within rated load. Therefore, if the machine is operated in an environment where the ambient temperature may fluctuate, it is important to compensate the thermal overload curve in order to maintain close thermal overload protection. Strategically placed temperature sensors can be used to provide information on ambient conditions, which in turn can then be used to influence the thermal replica. Motors which are particularly at risk are those operated in direct sunlight, boiler houses, tropical environments and motors which are reliant upon forced cooling.

The power delivered by a motor varies with the ambient temperature, the following table shows variations in power delivered as the temperature changes for a typical motor.

Ambient Temperature °C	40	45	50	55	60
Power delivered as a % of nominal power	100	95	90	85	80

Table 4: Reduction of per unit power delivered by motors relative to the ambient temperature

As the nominal power varies linearly with nominal current, with a constant voltage, the above table is applicable to nominal current.

The thermal setting is also directly proportional to nominal current. So to compensate for the ambient temperature variation, the thermal setting is corrected dependent upon the ambient temperature for the following conditions :

- During the calculation of thermal state
- During the detection of thermal alarm
- During the detection of thermal overload
- During the detection of thermal lockout

A correction coefficient is calculated depending upon the temperature as shown in the table below and is multiplied to the thermal thresholds:

Ambient Temperature °C	40	45	50	55	60	65
Multiplication Coefficient	1	0.95	0.90	0.85	0.80	0.75

Table 5: Correction coefficients used by the relay to offset the thermal replica at different ambient temperatures

The P24x accepts inputs from up to 10 RTD`s (resistance temperature detectors). Two of these RTD`s (one main and one back-up), can be used to measure the external/ambient temperature and influences the thermal curve.

2.2.6 Specific applications

2.2.6.1 Inhibition of the thermal trip during starting

It may be necessary to disable the thermal overload curve when starting motors which have extreme starting conditions, such as very long start times or very high start current values. With this feature enabled, if the calculated thermal state reaches 90% before the end of the starting period, this value is retained at 90% for the remaining starting period. At the end of the starting period the inhibit is removed.

Note: This function does not affect the operation of the Thermal Alarm feature.

2.2.6.2 Emergency restart

Where a motor forms part of an essential process, it is sometimes desirable for it to continue operation, even under severe overload conditions. This usually means the motor being subjected to temperatures in excess of its design limits. Even though this may decrease the life of the motor, or even under extreme circumstances, burn the motor out, this may be justified for the application.

2.2.6.3 Thermal alarm

The **Thermal Alarm** threshold is expressed as a percentage of the thermal state of the machine and is used to give an alarm when the thermal state reaches a predetermined value. There is no definitive setting for the thermal alarm threshold since it is application dependent. A typical setting would be 90%

2.2.6.4 Lockout threshold

This facility can be used to inhibit a hot restart until the motor has cooled to the **Lockout Thresh**. This setting is expressed as a percentage of the thermal state of the motor. A contact is designed to open when the thermal state of the machine reaches this setting and close again when the thermal state drops below this setting. This contact would therefore be wired into the starting circuitry in order to provide the inhibit.

There is no definitive setting for the lockout threshold since it is based on the motors capability to withstand a hot restart. It is typically set to the minimum value of 20%Ith.

2.3 Resistive temperature detectors

Prolonged overloading of motors or generators may cause their windings to overheat, resulting in premature ageing of the insulation, or in extreme cases, insulation failure. Worn or unlubricated bearings can also generate localized heating within the bearing housing. To protect against any general or localized overheating, the P24x relays have the ability to accept inputs from resistive temperature sensing devices (RTDs). Such probes are strategically placed in areas of the machine which are susceptible to overheating, or heat damage.

2.3.1 RTD thermal protection features

Typically an RTD probe can measure temperature within the range -40 to +400°C. The temperature at each probe location can be determined by the relay, and is available for:

- Temperature monitoring, displayed locally, or remotely via the relay communications
- Alarming, should a temperature threshold be exceeded for longer than a set time delay
- Tripping, should a temperature threshold be exceeded for longer than a set time delay
- Should the measured resistance be outside of the permitted range, an RTD failure alarm will be raised, indicating an open or short circuit RTD input

Note: Direct temperature measurement can provide more reliable thermal protection than devices which use a thermal replica energized from phase current. The latter is susceptible to inaccuracies in time constants used by the replica model, and also inaccuracies due to the variation in ambient temperature.

2.3.2 RTD thermal protection settings

Typical operating temperatures for protected plant are given. Actual figures must be obtained from the equipment manufacturers:

Parameter	Typical service temperature at full load	Short term overloading
Bearing temperature of motors or generators	Possibly 60 – 80°C, depending on the type of bearing.	+60 - +80°C
Top oil temperature of transformers	80°C (50 – 60°C above ambient).	A temperature gradient from winding temperature is usually assumed, such that top oil RTDs can provide winding protection.
Winding hot spot temperature	98°C for normal ageing of insulation.	Cyclic overloading might give +140°C during emergencies.

Table 6: Typical operating temperatures of a healthy plan

The P24x relay has an alarm threshold setting, with a time delay for each RTD input. Each input also has a trip element, with a temperature threshold and a time delay. The time delays may be set to 0 s if instantaneous protection is required.

Temperature settings may be set, in degrees Celsius/Fahrenheit, within the range 0-400°C.

2.4 Short circuit protection (50/51)

Faults between phases seldom occur because of the relatively large amount of insulation between phase windings. As the stator windings are completely enclosed in earthed metal, most faults will involve earth, which would then operate the earth fault protection. However, a fast operating overcurrent element is often employed to protect against phase faults occurring at the motor terminals; such as terminal flashovers.

The short circuit protection included within the P24x relays consists of a four stage non-directional overcurrent element. The first two stages have a time delayed characteristic that can be set as either Inverse Definite Minimum Time (IDMT) or Definite Time (DT). The third and fourth stages have a definite time delay. Each stage can be selectively enabled or disabled.

This element uses the Ia, Ib, and Ic relay inputs and can be fed from CTs at the terminal of the motor.

To avoid tripping during start-up as a result of asymmetric CT saturation, definite time element has a minimum operating time of 100 ms for currents in the range I> to 1.2I>.

The definite time characteristic is shown below in Figure 3.

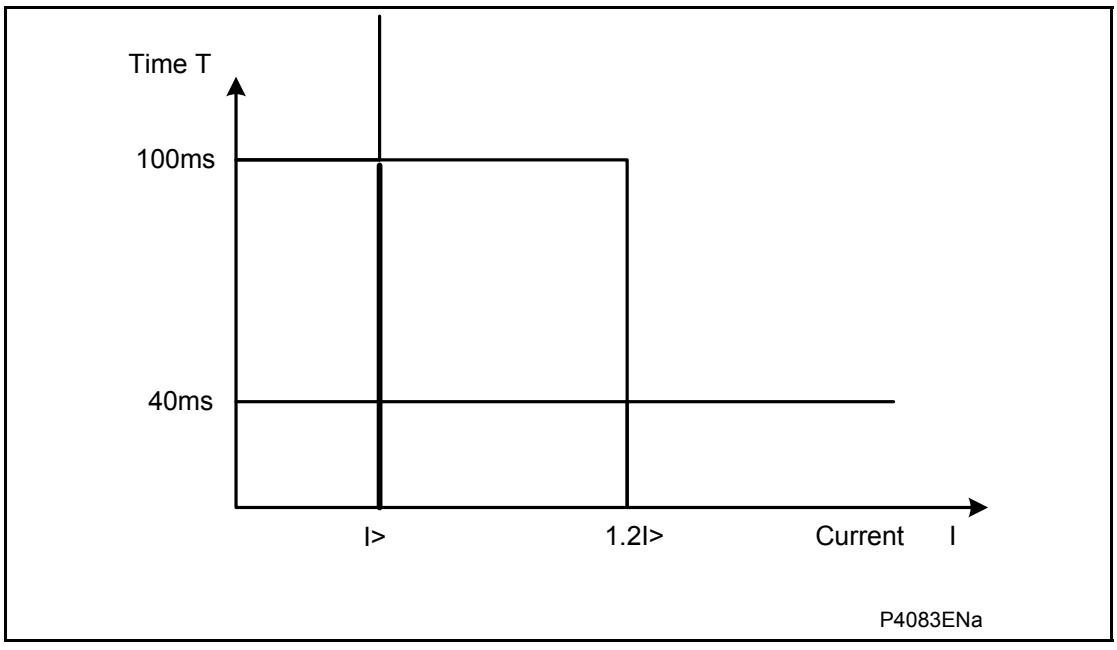

Figure 3: Definite time overcurrent element

2.4.1 Setting guidelines

To prevent operation during starting, the instantaneous element is usually set to 1.25 times the maximum starting current.

The timer setting is very much system dependent, but may typically be set to a value in the region of 100 ms.

Note: If the motor is controlled by a fused contactor, it will need to be coordinated with the fuse. This is to prevent the contactor attempting to interrupt current in excess of its breaking capacity.

2.4.2 Setting example

Utilizing the previously specified motor parameters, set:

I>Current Set = (1.25 x 4.7 x 293)/300 = 5.7 In
I> Time Delay = 100 ms

These settings are illustrated graphically in Figure 3.

2.5 Earthfault protection (50N/51N/67N/32N/64N)

One of the most common faults to occur on a motor is a stator winding fault. This is usually the result of prolonged or cyclic overheating, which causes the insulation to deteriorate. Since the windings are surrounded by an earthed metal case, stator faults usually manifest themselves as earthfaults. The type of earthfault protection and CT arrangement adopted will depend on the amount of earth fault current available during a fault. The magnitude of current is dependent upon the system earthing arrangements.

The P24x earth fault element is equipped with two independent stages, which are selectable as either forward, reverse or non-directional. The first stage may be selected as either IDMT or DT and the second stage is DT only.

The inverse time delayed characteristics listed above, comply with the following formula:

$t = T \times \{ [K / ((I/Is)\alpha (- 1))] + L\}$

Where;

t = operation time

K =constant

I = measured current

Is = current threshold setting

α = constant

L = ANSI/IEEE constant (zero for IEC curves)

T = Time multiplier Setting or Time Dial Setting

Curve description	Standard	K constant	α constant	L constant
Standard Inverse	IEC	0.14	0.02	0
Very Inverse	IEC	13.5	1	0
Extremely Inverse	IEC	80	2	0
Long Time Inverse	UK	120	1	0
Moderately Inverse	IEEE	0.0515	0.02	0.114
Very Inverse	IEEE	19.61	2	0.491
Extremely Inverse	IEEE	28.2	2	0.1217
Inverse	US-C08	5.95	2	0.18
Short Time Inverse	US-C02	0.02394	0.02	0.01694

Table 7: Standard IDMT curve constant values

Note: The IEEE and US curves are set differently to the IEC/UK curves, with regard to the time setting. A time multiplier setting (TMS) is used to adjust the operating time of the IEC curves, whereas a time dial setting is employed for the IEEE/US curves. Both the TMS and Time Dial settings act as multipliers on the basic operating time.

Note: All the curves are shown in the Technical Data chapter, *P24X/EN TD*.

The element operates from residual current obtained from either the residual connection of the three phase CTs, or from an independent core balance CT. The core-balance CT is normally of the ring type, through the centre of which is passed the three phase cable to the motor. The advantage in using this CT arrangement lies in the fact that only one CT core is used, in place of the conventional three phase CTs whose three secondary windings are residually connected. In this way the CT magnetizing current at relay operation is reduced by approximately three-to-one; an important consideration in the detection of low level earthfaults, where low effective settings are required. Furthermore, the primary current rating does not need to be related to motor full load current as no secondary current flows under normal balanced conditions. This allows the CT ratio to be chosen such as to optimize the effective primary pick-up current.

Core-balance transformers are normally mounted over a cable at a point close to the cable gland. Physically split cores, that is 'slip-over' types, are normally available for applications in which the cable is already in position, as on existing installations. Figure 4 illustrates the correct method of earthing the cable sheath when using a core balance CT.

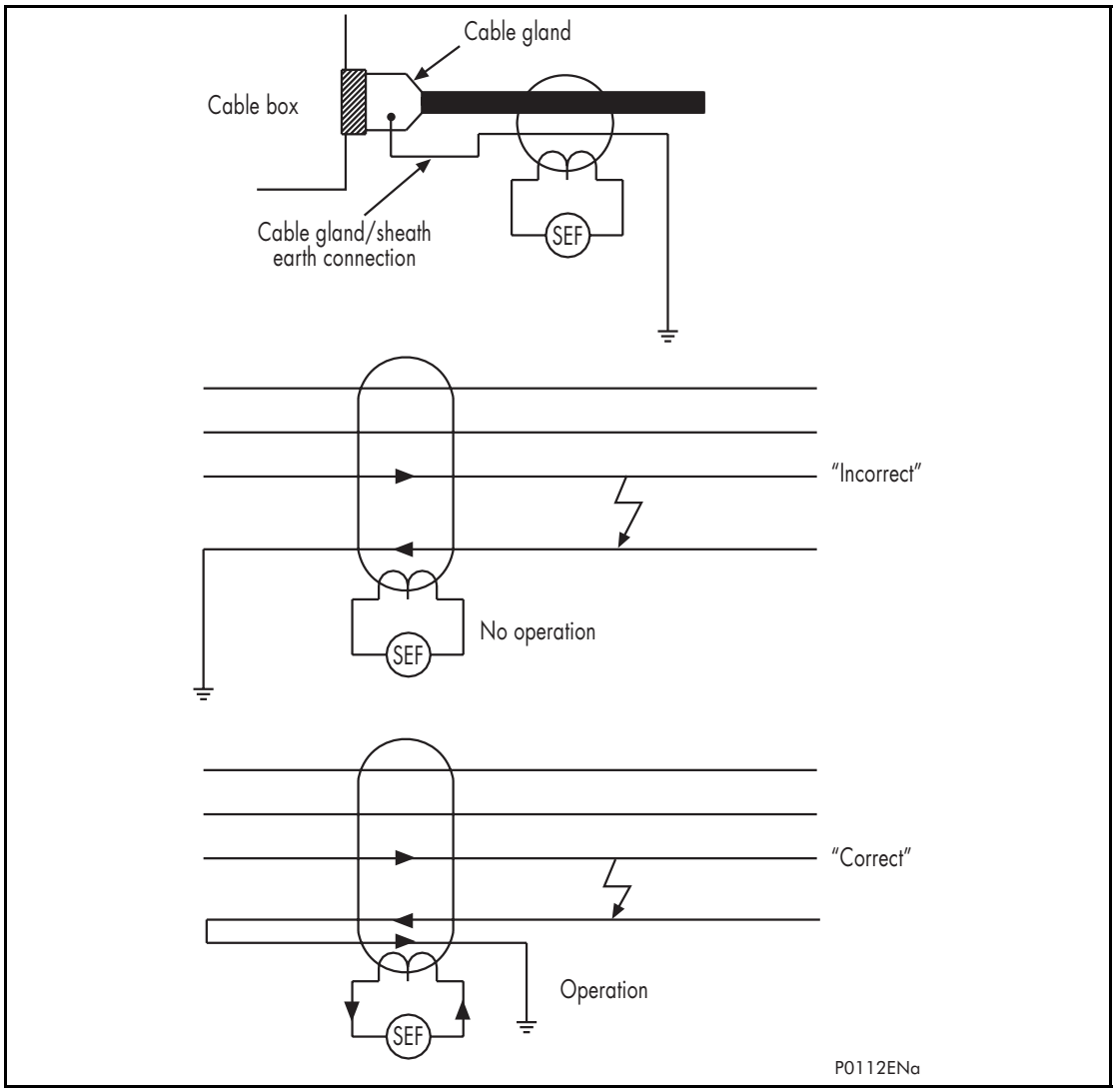

Figure 4: Core balanced CT with cable

Where directional earth fault protection is required, the element should be polarized from residual voltage (-3Vo). This is derived from either the three phase VT inputs to the relay or the residual voltage input. The **VT Connect Mode**, **3VT, 2VT+VResidual, 2VT+Vremanent** can be selected in the **CT and VT Ratios** menu.

Different VT ratio settings for the three modes of connection are available.

2.5.1 Solidly earthed system

2.5.1.1 Principle

On solidly earthed systems, for earth fault settings >20% of the motor continuous rated current, it is acceptable to use the conventional residual CT connection for the detection of earth faults. Below this value the use of a core balance CT may be more applicable

Care must be taken to ensure that the relay does not operate from the spill current resulting from asymmetric CT saturation during starting. To achieve stability under these conditions, it is usual to insert a stabilizing resistor in series with the relay or use a time delay. The required value of resistor is calculated as follows;

$$R_{stab} = \frac{I_{st}}{I_o} (R_{ct} + N. R_1 + R_r)$$

Where ;

I_o = earth fault setting in amps

I_{st} = motor starting current referred to CT secondary

R_{ct} = d.c. resistance of CT secondary

N = 1 for 4 wire CT connection (star point at CTS)

2 for 6 wire CT connection (both star points formed at relay panel).

R_1 = resistance of single lead from relay to CT

R_r = Relay resistance in ohms

AP

2.5.1.2 Typical settings

Typically, the earth fault element should be set non-directional with a setting of approximately 30% of the motor continuous rated current.

Where a stabilizing resistor is used, the earthfault element should be set instantaneous. If one is not used, stability during asymmetric CT saturation can be achieved by time delaying the earth fault element. The actual timer setting is very much system dependent.

If the motor is supplied by a fused contactor, it is important to grade the earthfault protection to ensure that the contactor does not attempt to interrupt fault current in excess of its breaking capacity. Figure 5 gives an example:

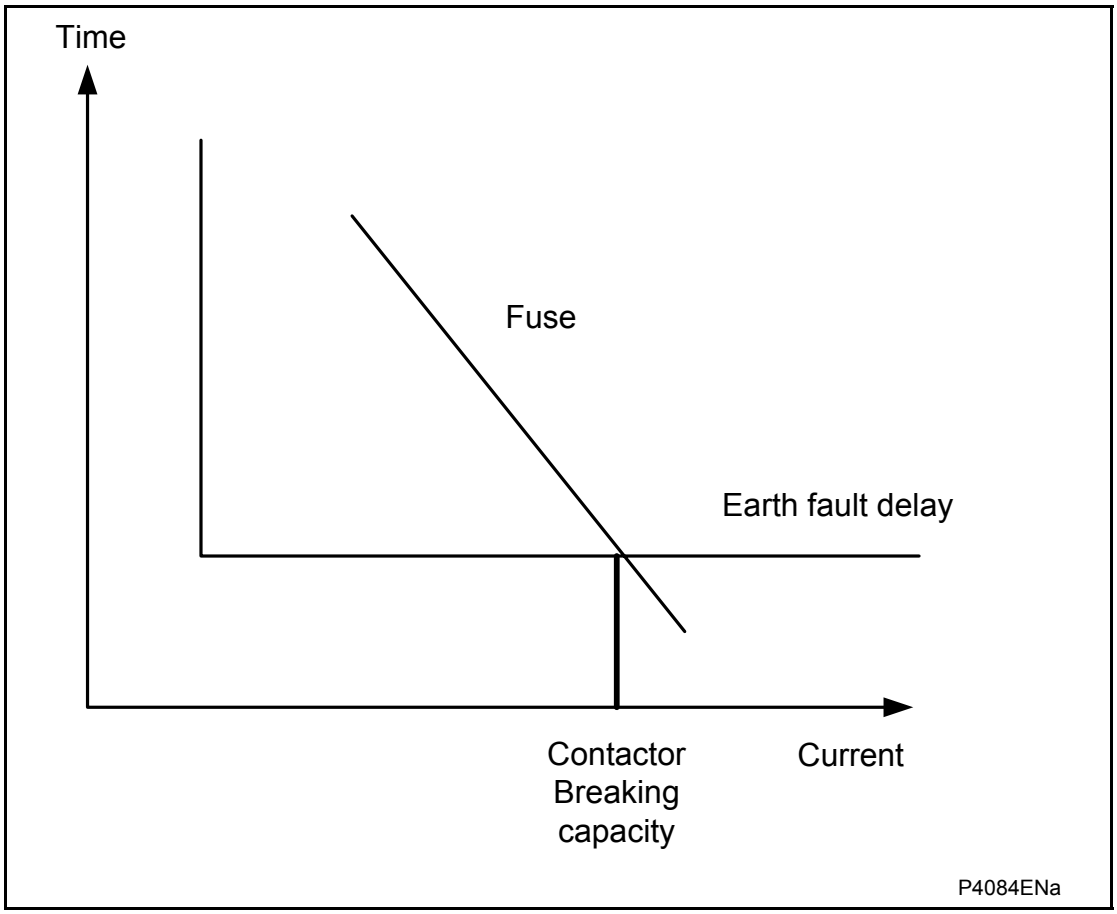

Figure 5: Fuse characteristic

AP

2.5.2 Insulated system

2.5.2.1 Principle

The advantage gained by running a power system which is insulated from earth, is the fact that during a single phase to earth fault condition, no earth fault current is allowed to flow. Consequently, it is possible to maintain power flow on the system, even when an earth fault condition is present. This advantage is offset by the fact that the resultant steady state and transient overvoltages on the sound phases can be very high.

Clearly, operational advantages may be gained by the use of insulated systems. However, it is still vital that detection of the fault is achieved. This is obviously not possible by means of standard current operated earth fault protection. One possibility for fault detection is by means of a residual overvoltage device. This functionality is included within the P24x relay and is detailed in section 2.6. However, fully discriminative earth fault protection on this type of system may be achieved by the application of a sensitive earth fault element. This type of relay is set to detect the resultant imbalance in the system charging currents that occurs under earth fault conditions. It is therefore essential that a core balance CT is used for this application.

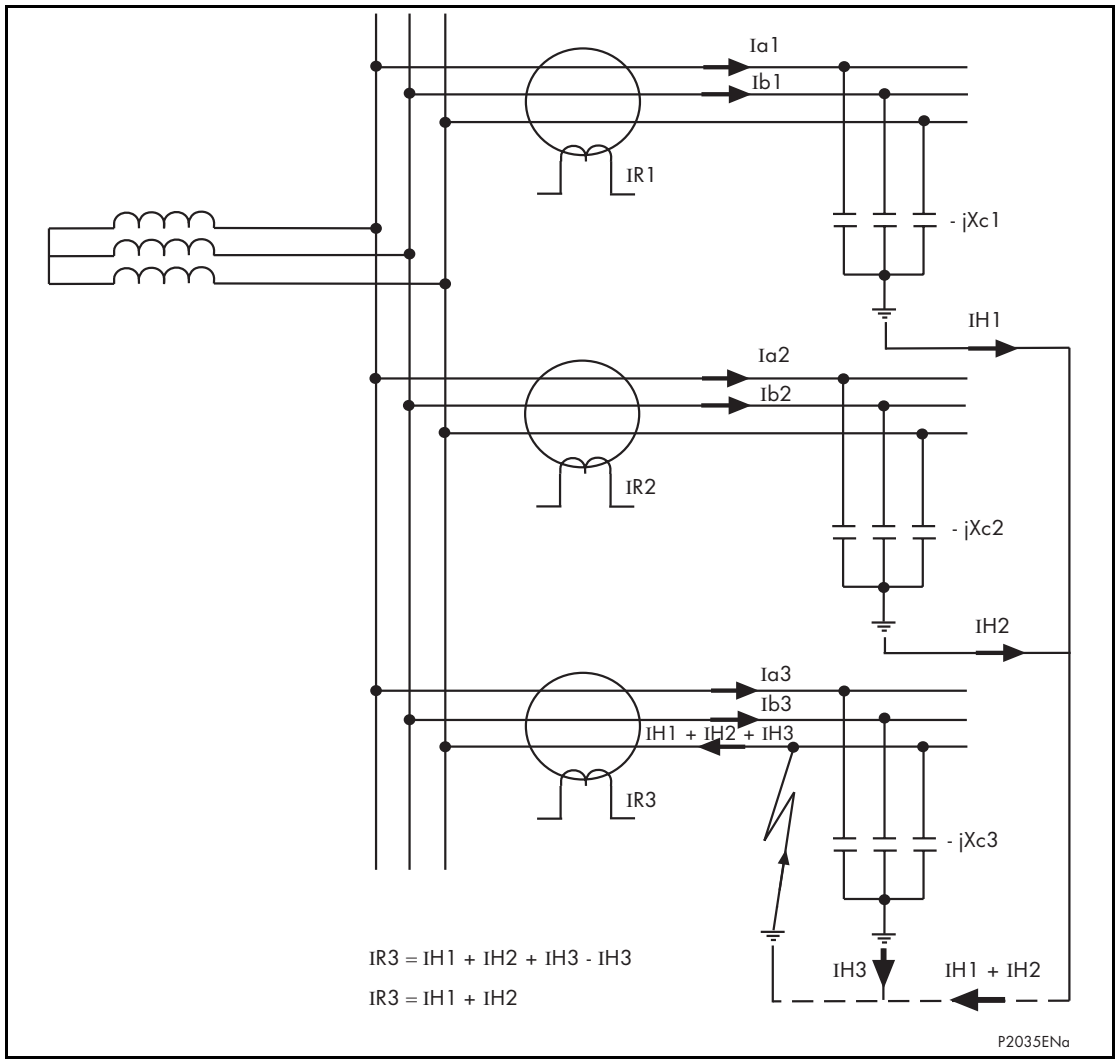

Figure 6: Current distribution in an insulated system with C phase fault

Figure 6 shows that the relays on the healthy motor feeders see the unbalance in the charging currents for their own feeder.

The relay on the faulted feeder, however, sees the charging current from the rest of the system (IH1 and IH2 in this case), with its own feeders charging current (IH3) becoming cancelled out. This is further illustrated by the phasor diagrams shown in Figure 7.

AP

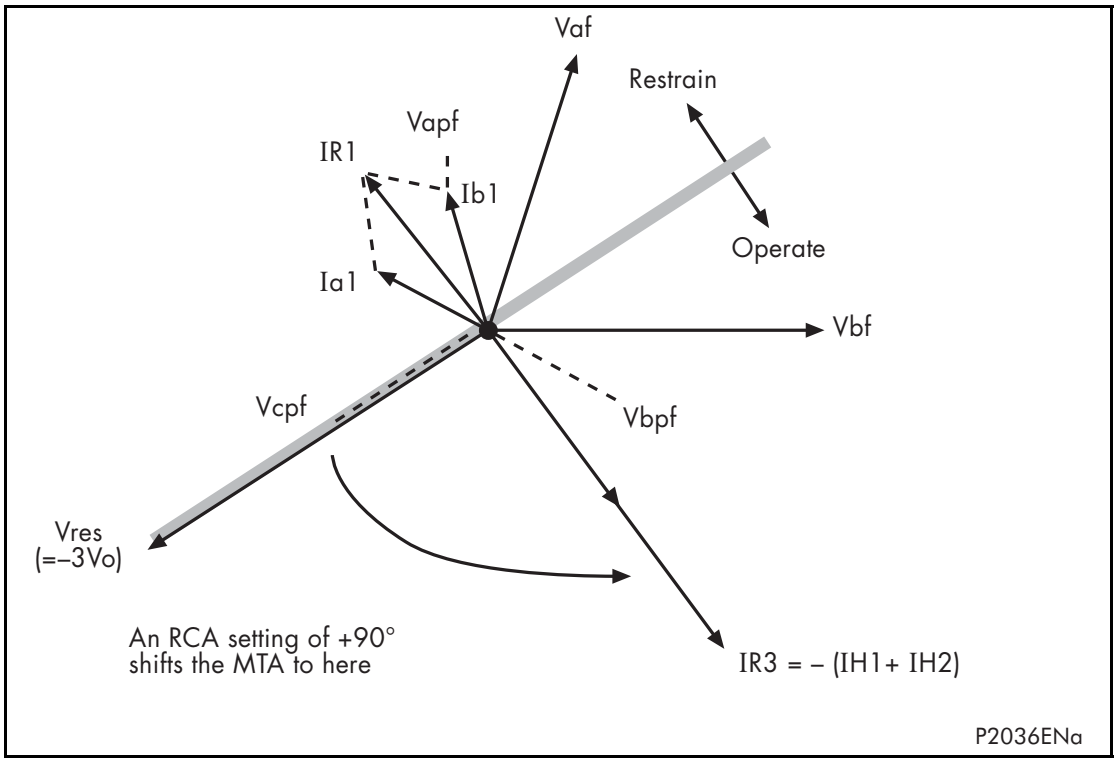

Figure 7: Phasor diagrams for insulated system with C phase fault

AP

Referring to the phasor diagram, it can be seen that the C phase to earth fault causes the voltages on the healthy phases to rise by a factor of √3. The A phase charging currents (Ia1), is then shown to be leading the resultant A phase voltage by 90°. Likewise, the B phase charging current leads the resultant Vb by 90°.

The unbalance current detected by a core balance current transformer on the healthy motor feeders can be seen to be a simple vector addition of Ia1 and Ib1, giving a residual current which lies at exactly 90° lagging the residual voltage (-3Vo). As the healthy phase voltages have risen by a factor of √3, the charging currents on these phases will also be √3 times larger than their steady state values. Therefore, the magnitude of residual current, IR1, is equal to 3 x the steady state per phase charging current.

The phasor diagrams indicate that the residual currents on the healthy and faulted motor feeders, IR1 and IR3 respectively, are in antiphase. A directional element could therefore be used to provide discriminative earth fault protection.

If the polarizing voltage of this element, Vres (equal to -3Vo), is shifted through +90°, the residual current seen by the relay on the faulted feeder will lie within the operate region of the directional characteristic and the current on the healthy feeders will fall within the restrain region.

Note: The actual residual voltage used as a reference signal for the directional earth fault protection in the P24x relay is internally phase shifted by 180° and is therefore shown as -3Vo in the vector diagrams.

As previously stated, the required characteristic angle setting for the sensitive earth fault element when applied to insulated systems is +90°.

Note: The recommended setting corresponds to the relay being connected such that it's direction of current flow for operation is from the motor feeder into the busbar. The correct relay connections to give a defined direction for operation are shown in the relay connection diagrams in the Installation chapter, *P24x/EN IN*.

The P24x relay internally derives the residual polarizing voltage for the directional earth fault element. Consequently, either a 5-limb or three single phase VT's should be applied to drive the relay, not a VT of the three-limb design. The former types allow the passage of residual flux through the VT and consequently permit the relay to derive the required residual voltage. A three limb VT provides no path for the flow of residual flux and is therefore unsuitable. Alternatively, the relay can be driven by a phase to phase connected VT with a broken delta winding connected to the residual voltage input.

Note: Discrimination can be provided without the need for directional control. This can only be achieved if it is possible to set the relay in excess of the charging current of the protected feeder and below the charging current for the rest of the system.

2.5.2.2 Setting guidelines

As shown previously, the residual current detected by the relay on the faulted feeder is equal to the sum of the charging currents flowing from the rest of the system. Further, as stated earlier, the addition of the two healthy phase charging currents on each feeder gives a total charging current which has a magnitude of three times the per phase value. Therefore, the total unbalance current detected by the relay is equal to three times the per phase charging current of the rest of the system. A typical relay setting may therefore be in the order of 30% of this value, that is. equal to the per phase charging current of the remaining system. Practically though, the required setting may well be determined on site, where system faults can be applied and suitable settings can be adopted based upon practically obtained results. The use of the P24x relays comprehensive measurement and fault recording facilities may prove very useful in this respect.

The timer setting of this element is not critical, since for the first fault only capacitive current exists on the system. However, for subsequent faults, fast tripping will be required. If the motor is operated using a fused contactor it is important to delay the protection sufficiently in order to ensure that the contactor does not attempt to interrupt fault current in excess of its breaking capacity.

2.5.3 Resistance earthed systems

Earthing the system by means of a resistor reduces both the fault current and transient overvoltages. In addition to this, resistance earthing can sometimes be advantageous in hazardous environments such as mines etc. since the earthing resistance effectively reduces touch and step potentials during earth faults.

2.5.3.1 Setting guidelines

On a resistance earthed system, it is common practice to limit the fault current to approximately full load current.

For such an application, the relay may be set non-directional with a current sensitivity of less than 30% of the minimum earth fault level but greater than three times the steady state charging current of the motor feeder. (It is apparent from Figure 6 that the healthy feeder, regardless of the method of earthing, will see this value of charging current).

Similar guidelines to those given for solidly earthed systems (section 2.5.1) are applicable with regard to the required time delay setting.

Note: If the above setting guidelines for applying a non-directional relay cannot be achieved due to the current magnitudes, then a sensitive directional earth fault element will be required. This eliminates the need to set the relay in excess of the charging current for the protected feeder.

2.5.3.2 High resistance earthing

For certain applications, the fault current may be severely limited by the use of very high resistance earthing. It is usual in this case to choose a value of resistor which will limit the resistive fault current to a similar magnitude as the system charging current. Therefore, charging current will have a marked influence on the angle of the fault current with respect to the polarizing voltage (-3Vo).

In this application sensitive directional earthfault protection, operated from a core balance CT, will be required. The relay characteristic angle setting should therefore be set to +45° (refer to Figure 7).

Note: This recommended setting corresponds to the relay being connected such that its direction of current flow for operation is from the motor feeder into the busbar.

The current sensitivity of the relay should be approximately 30% of √2 times the charging current for the rest of the system (3 x steady state value). The correct relay connections to give a defined direction for operation are shown on the relay connection diagram the Installation chapter, *P24x/EN IN*.

The timer setting of this element is not critical, since for the first fault minimal damage will result. However, for subsequent faults, fast tripping will be required.

Note: Similar comments apply with respect to those given in section 2.5.2 regarding the VT requirements for the P24x relay when directionalizing earth fault elements (R.C.A = relay characteristic angle).

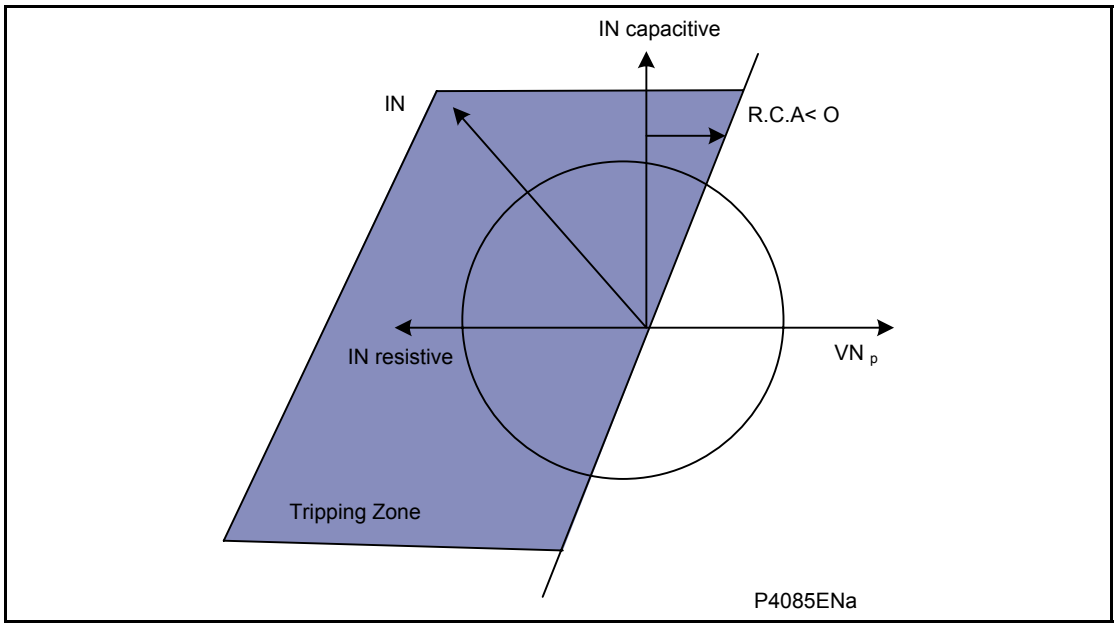

Figure 8: Directional tripping characteristic

2.5.4 Petersen coil earthed systems

2.5.4.1 Principle

Power systems are usually earthed to limit transient overvoltages during arcing faults and also to assist with detection and clearance of earth faults. Impedance earthing has the advantage of limiting damage incurred by plant during earth fault conditions and also limits the risk of explosive failure of switchgear, which is a danger to personnel. In addition, it limits touch and step potentials at a substation or in the vicinity of an earth fault.

If a high impedance device is used for earthing the system, or the system is unearthed, the earth fault current will be reduced but the steady state and transient overvoltages on the sound phases can be very high. Consequently, it is generally the case that high impedance earthing will only be used in low/medium voltage networks in which it does not prove too costly to provide the necessary insulation against such overvoltages. Higher system voltages would normally be solidly earthed or earthed via a low impedance.

A special case of high impedance earthing via a reactor occurs when the inductive earthing reactance is made equal to the total system capacitive reactance to earth at system frequency. This practice is widely referred to as Petersen (or resonant) Coil Earthing. With a correctly tuned system, the steady state earthfault current will be zero, so that earth faults become self-extinguishing. Such a system can, if designed to do so, be run with one phase earthed for a long period until the cause of the fault is identified and rectified. With the effectiveness of this method being dependent upon the correct tuning of the coil reactance to the system capacitive reactance, an expansion of the system at any time would clearly necessitate an adjustment of the coil reactance.

Petersen coil earthed systems are commonly found in areas where the power system consists mainly of rural overhead lines and can be particularly beneficial in locations which are subject to a high incidence of transient faults. The Petersen coil, for example, can extinguish transient earth faults caused by lightning strikes without the need for outages.

Figure 9 shows a source of generation earthed through a Petersen Coil, with an earth fault applied on the A Phase. Under this situation, it can be seen that the A phase shunt capacitance becomes short circuited by the fault. Consequently, the calculations show that if the reactance of the earthing coil is set correctly, the resulting earth fault current will be zero.

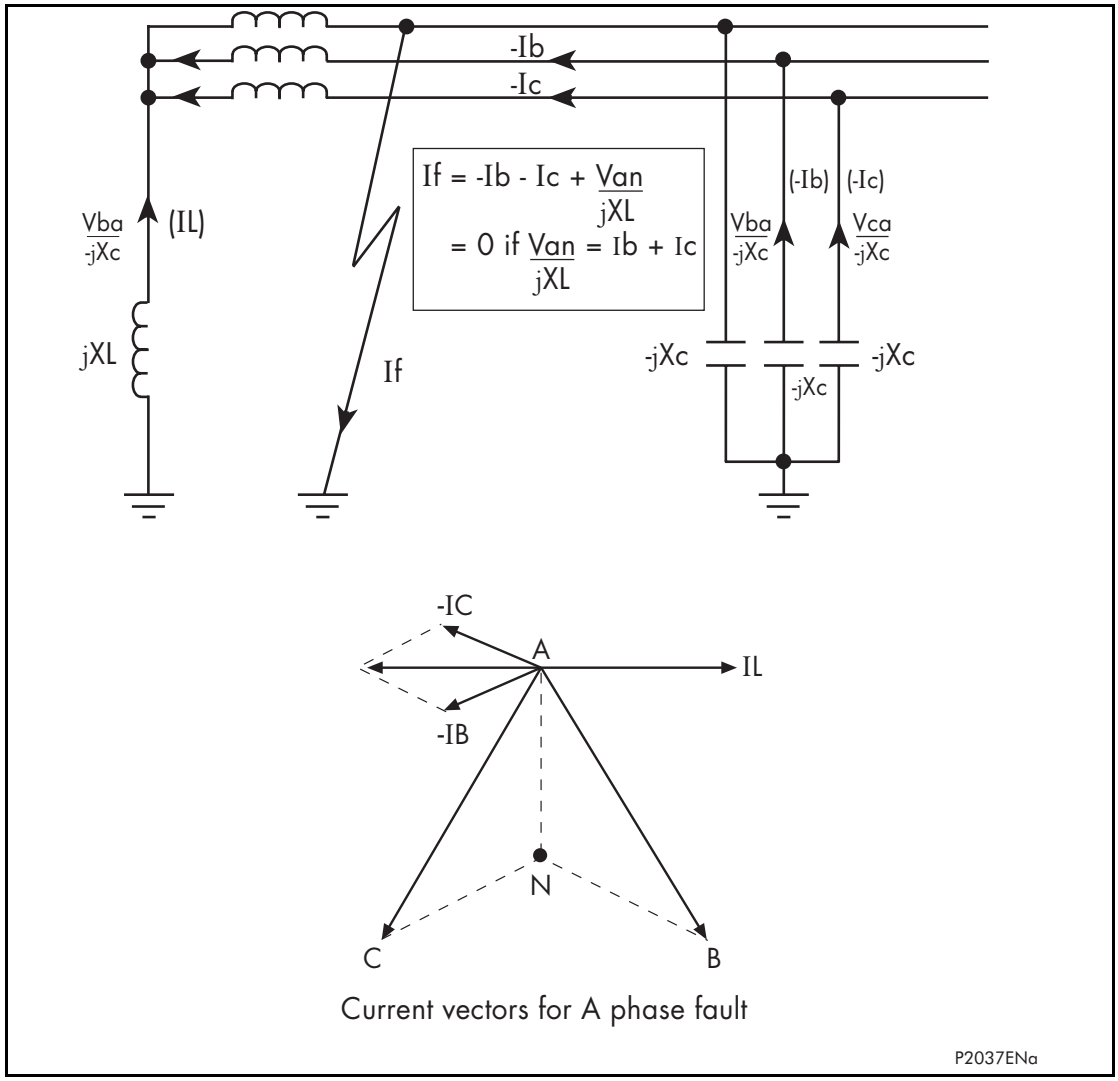

Figure 9: Current distribution in Petersen coil earthed system

Prior to actually applying protective relays to provide earth fault protection on systems which are earthed using a Petersen Coil, it is imperative to gain an understanding of the current distributions that occur under fault conditions on such systems. With this knowledge, it is then possible to decide on the type of relay that may be applied, ensuring that it is both set and connected correctly.

Figure 10 shows a radial distribution system having a source which is earthed using a Petersen Coil. Three outgoing feeders are present, the lower of which has a phase to earth fault applied on the C phase.

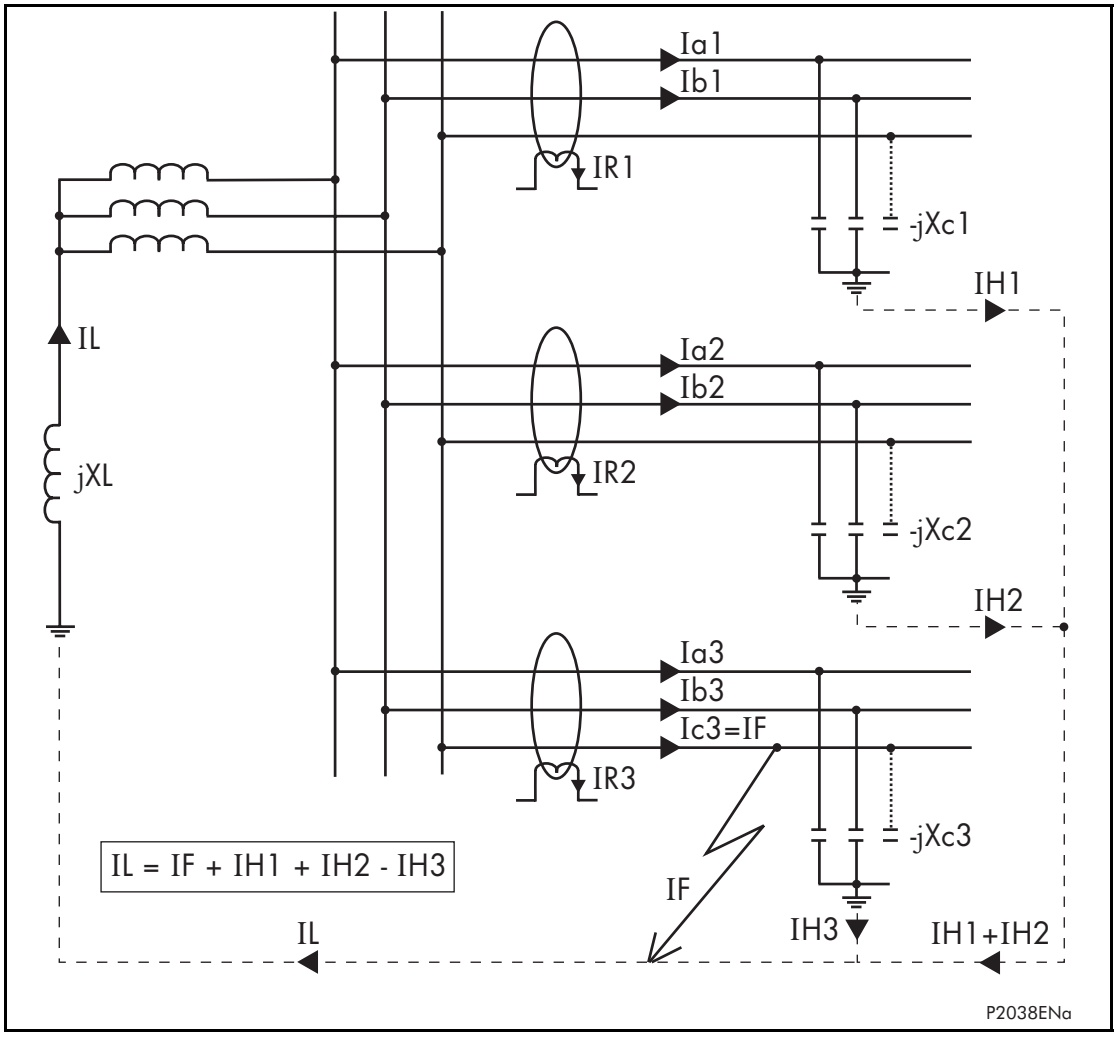

Figure 10: Distribution of currents during a C phase to earth fault

Figure 11 (a, b and c) shows vector diagrams for the previous system, assuming that it is fully compensated (i.e. coil reactance fully tuned to system capacitance), in addition to assuming a theoretical situation where no resistance is present either in the earthing coil or in the feeder cables.

AP

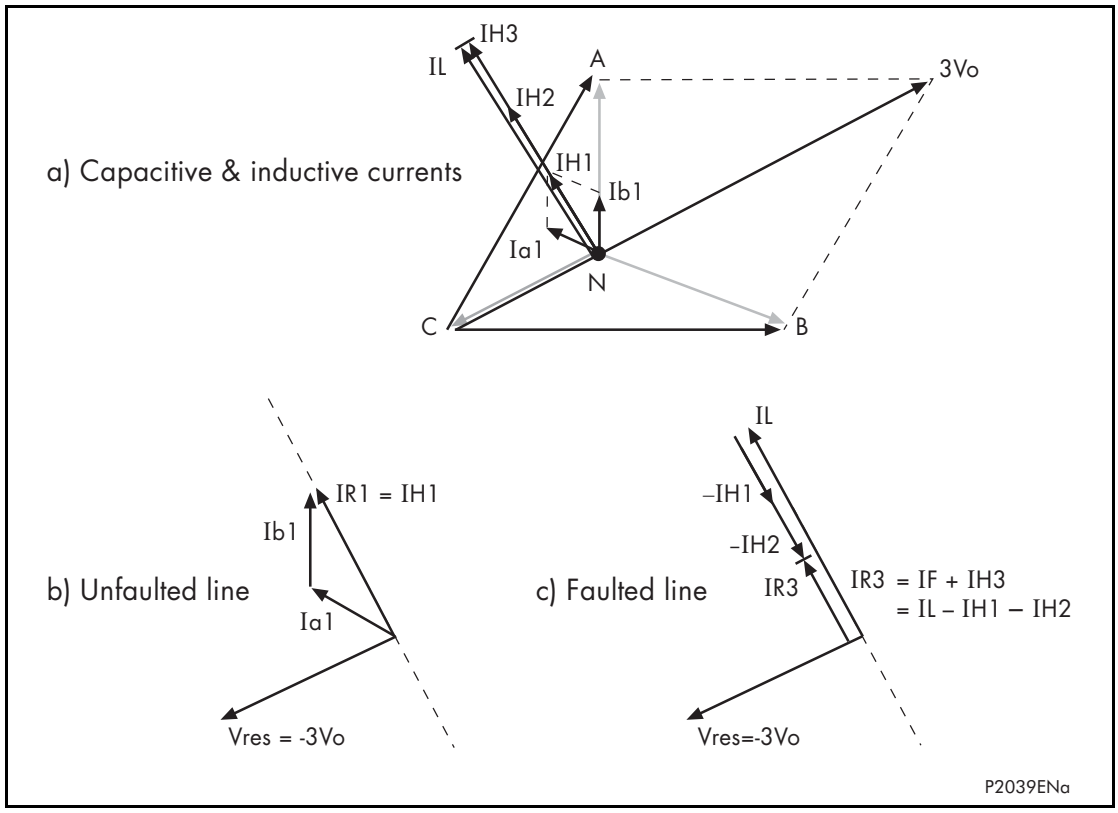

Figure 11: Theoretical case - no resistance present in XL or XC

AP

Referring to the vector diagram illustrated in Figure 11a, it can be seen that the C phase to earth fault causes the voltages on the healthy phases to rise by a factor of √3. The A phase charging currents (Ia1, Ia2 and Ia3), are then shown to be leading the resultant A phase voltage by 90° and likewise for the B phase charging currents with respect to the resultant Vb.

The unbalance current detected by a core balance current transformer on the healthy feeders can be seen to be a simple vector addition of Ia1 and Ib1, giving a residual current which lies at exactly 90° lagging the residual voltage (Figure 11b). Clearly, as the healthy phase voltages have risen by a factor of √3, the charging currents on these phases will also be √3 times larger than their steady state values. Therefore, the magnitude of residual current, IR1, is equal to 3 x the steady state per phase charging current.

Note : The actual residual voltage used as a reference signal for directional earth fault relays is phase shifted by 180° and is therefore shown as -3Vo in the vector diagrams. This phase shift is automatically introduced within the 24x relays.

On the faulted feeder, the residual current is the addition of the charging current on the healthy phases (Ih3) plus the fault current (If). The net unbalance is therefore equal to Il-Ih1-Ih2, as shown in Figure 11c.

This situation may be more readily observed by considering the zero sequence network for this fault condition. This is depicted in Figure 12 below;

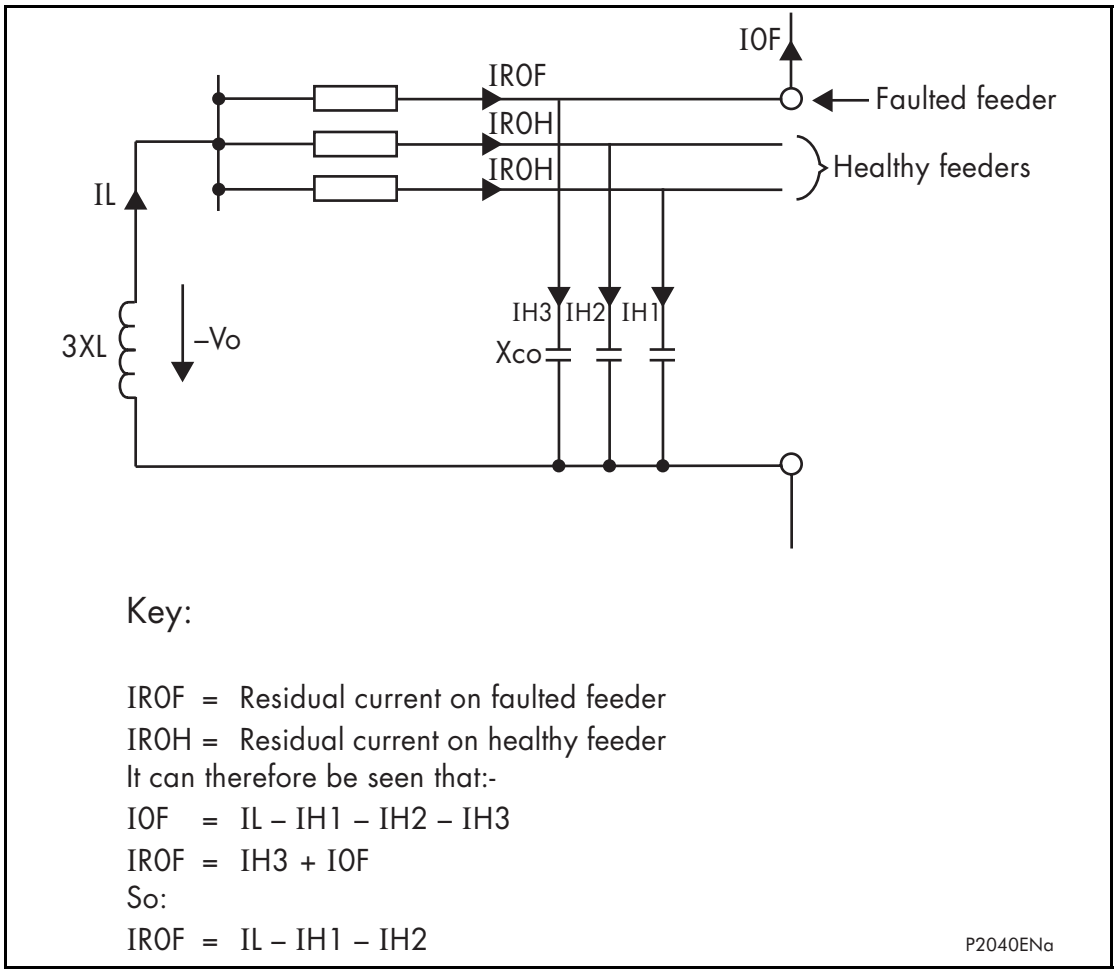

Figure 12: Theoretical case - no resistance present in XL or XC

Zero sequence network showing residual currents

In comparing the residual currents occurring on the healthy and on the faulted feeders (Figures 11b & 11c), it can be seen that the currents would be similar in both magnitude and phase; so it would not be possible to apply a relay which could provide discrimination.

However, as previously stated, the scenario of no resistance being present in the coil or feeder cables is purely theoretical. Further consideration therefore needs to be given to a practical application in which the resistive component is no longer ignored as shown in Figure 13:

AP

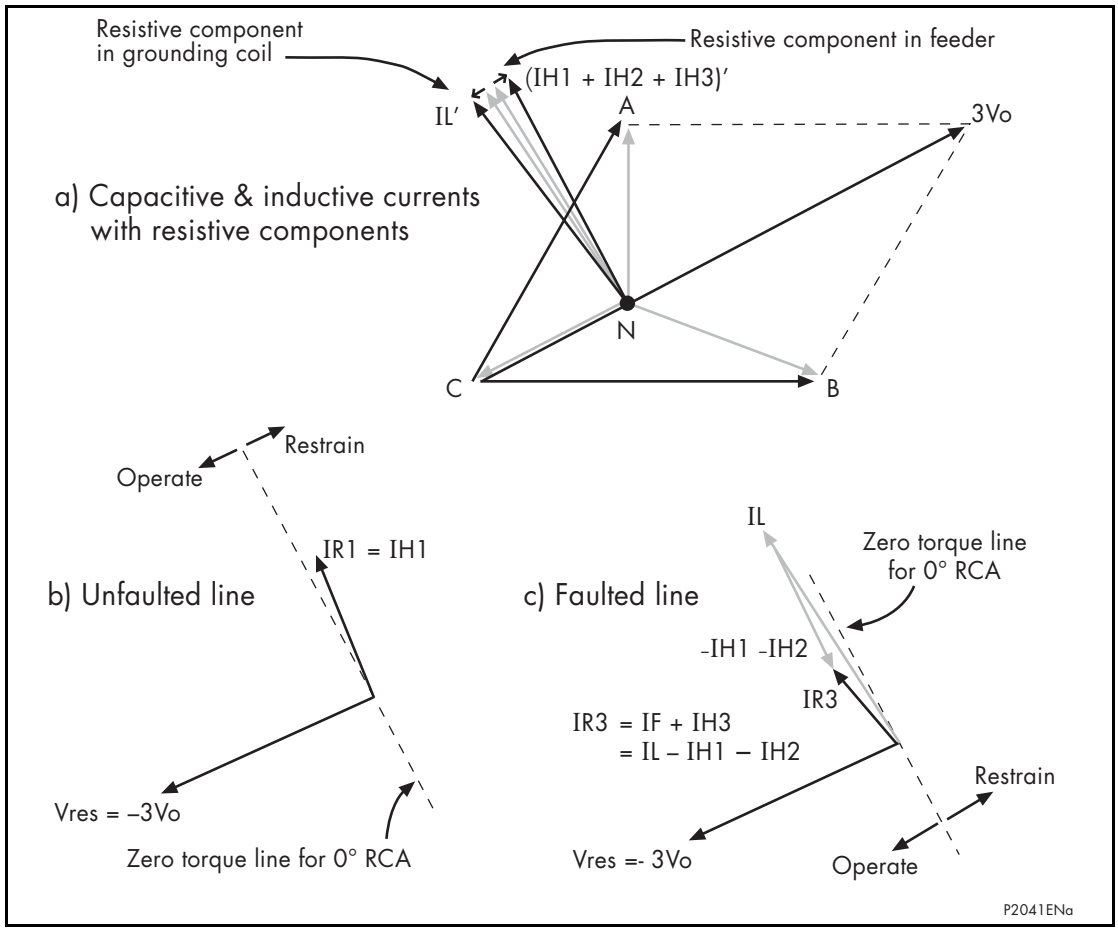

Figure 13: Practical case:- resistance present in XL and Xc

Figure 13a again shows the relationship between the capacitive currents, coil current and residual voltage. It can now be seen that due to the presence of resistance in the feeders, the healthy phase charging currents are now leading their respective phase voltages by less than 90°. In a similar manner, the resistance present in the earthing coil has the effect of shifting the current, IL, to an angle less than 90° lagging. The result of these slight shifts in angles can be seen in figures 13b and 13c.

The residual current now appears at an angle in excess of 90° from the polarizing voltage for the unfaulted feeder and less than 90° on the faulted feeder. Hence, a directional relay having a characteristic angle setting of 0° (with respect to the polarizing signal of -3Vo) could be applied to provide discrimination. i.e. the healthy feeder residual current would appear within the restrain section of the characteristic but the residual current on the faulted feeder would lie within the operate region.

In practical systems, it may be found that a value of resistance is purposely inserted in parallel with the earthing coil. This serves two purposes; one is to actually increase the level of earth fault current to a more practically detectable level and the second is to increase the angular difference between the residual signals; again to aid in the application of discriminating protection.

2.5.4.2 Operation of sensitive earth fault element

It has been shown that the angular difference between the residual currents on the healthy and faulted feeders allows the application of a directional relay whose zero torque line passes between the two currents. Two possibilities exist for the type of protection element that may consequently be applied for earth fault detection.

- A suitably sensitive directional earth fault relay having a relay characteristic angle setting (RCA) of zero degrees, with the possibility of fine adjustment about this threshold.
- A sensitive directional zero sequence wattmetric relay having similar requirements to the above with respect to the required RCA settings.

Both stages 1 and 2 of the sensitive earth fault element of the P24x relay are settable down to 0.2% of rated current and would therefore fulfill the requirements of the first method listed above and could therefore be applied successfully. However, many utilities (particularly in central Europe) have standardized on the wattmetric method of earth fault detection, which is described in the following section.

Zero sequence power measurement, as a derivative of Vo and Io, offers improved relay security against false operation with any spurious core balance CT output for non earth fault conditions. This is also the case for a sensitive directional earth fault relay having an adjustable Vo polarizing threshold.

2.5.5 Wattmetric characteristic

2.5.5.1 Principle

The previous analysis has shown that a small angular difference exists between the spill current on the healthy and faulted feeders. It can be seen that this angular difference gives rise to active components of current which are in antiphase to one another. This is shown in Figure 14 below;

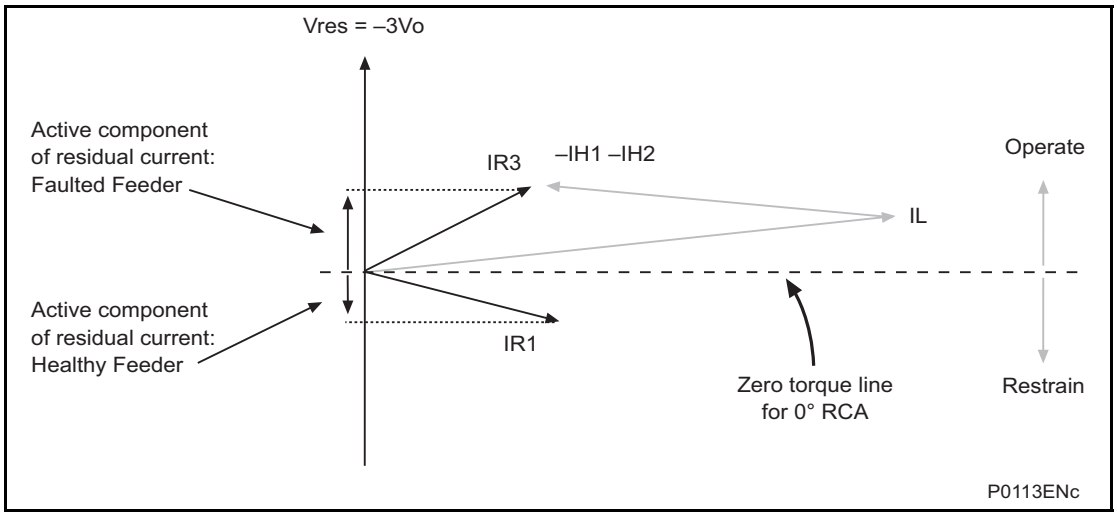

Figure 14: Resistive components of spill current

Consequently, the active components of zero sequence power will also lie in similar planes and so a relay capable of detecting active power would be able to make a discriminatory decision. That is, if the wattmetric component of zero sequence power was detected in the forward direction, then this would be indicative of a fault on that feeder; if power was detected in the reverse direction, then the fault must be present on an adjacent feeder or at the source.

For operation of the directional earth fault element within the P24x relays, all three of the settable thresholds on the relay must be exceeded ; namely the current (**P0>Current Set**), the voltage (**P0>Voltage Set**) and the power (**P0>Coef. K Set**). It should be noted though, that the directional decision within the relays is based purely on current rather than power. The 'Coef. K' threshold is simply present as an additional level that must be exceeded before a trip is initiated.

As can be seen from the following formula, the wattmetric power is calculated using residual rather than zero sequence quantities. Residual quantities are three times their respective zero sequence values and so the complete formula for operation is as shown below:-

The wattmetric element setting corresponds to:

$Vres \times Ires \times \cos(\Phi - \Phi c) = 9 \times Vo \times Io \times \cos(\Phi - \Phi c)$

Where ;

Φ = Angle between the Polarizing Voltage (-Vres) and the Residual Current

Φc = Relay Characteristic Angle (RCA) Setting (ISEF> Char Angle)

Vres = Residual Voltage

Ires = Residual Current

Vo = Zero Sequence Voltage

Io = Zero Sequence Current

2.5.5.2 Application considerations

Required relay current and voltage connections :

Referring to the relevant application diagram for the P24x relay, it should be applied such that its direction for forward operation is looking down into the protected feeder (away from the busbar), with a 0° RCA setting.

As illustrated in the relay application diagram, it is usual for the earth fault element to be driven from a core balance current transformer (CBCT). This eliminates the possibility of spill current that may arise from slight mismatches between residually connected line CT's. It also enables a much lower CT ratio to be applied, thereby allowing the required protection sensitivity to be more easily achieved.

2.5.5.3 Calculation of required relay settings :

As has been previously shown, for a fully compensated system, the residual current detected by the relay on the faulted feeder is equal to the coil current minus the sum of the charging currents flowing from the rest of the system. Further, as stated in the previous section, the addition of the two healthy phase charging currents on each feeder gives a total charging current which has a magnitude of three times the steady state per phase value. Therefore, for a fully compensated system, the total unbalance current detected by the relay is equal to three times the per phase charging current of the faulted circuit. A typical relay setting may therefore be in the order of 30% of this value, i.e. equal to the per phase charging current of the faulted circuit. Practically though, the required setting may well be determined on site, where system faults can be applied and suitable settings can be adopted based upon practically obtained results.

Also, in most situations, the system will not be fully compensated and consequently a small level of steady state fault current will be allowed to flow. The residual current seen by the relay on the faulted feeder may thus be a larger value, which further emphasizes the fact that relay settings should be based upon practical current levels, wherever possible.

The above also holds true regarding the required Relay Characteristic Angle (RCA) setting. As has been shown earlier, a nominal RCA setting of 0º is required. However, fine tuning of this setting will require to be carried out on site in order to obtain the optimum setting in accordance with the levels of coil and feeder resistances present. The loading and performance of the CT will also have an effect in this regard. The effect of CT magnetizing current will be to create phase lead of current. Whilst this would assist with operation of faulted feeder relays it would reduce the stability margin of healthy feeder relays. A compromise can therefore be reached through fine adjustment of the RCA. This is adjustable in 1° steps on the P24x relays.

2.6 Residual overvoltage (neutral displacement) protection (59N)

On a healthy three phase power system, the addition of each of the three phase to earth voltages is nominally zero, as it is simply the vector addition of three balanced vectors at 120° to one another. However, when an earth fault occurs on the primary system, this balance is upset and a 'residual' voltage is produced. This could be measured, for example, at the secondary terminals of a voltage transformer having a "broken delta" secondary connection.

Note: This condition causes a rise in the neutral voltage with respect to earth which is commonly referred to as "neutral voltage displacement" or NVD.

Therefore, it can be seen that the detection of a residual overvoltage condition is an alternative means of earth fault detection which does not require any measurement of current. This may be particularly advantageous in high impedance earthed / insulated systems, where the provision of core balance CT's on each feeder may be either impractical or uneconomic.

Note: Where residual overvoltage protection is applied, such a voltage will be generated for a fault occurring anywhere on that section of the system and hence the applied protection must be discriminative. The NVD element within the P24x relay is of two stage design, each stage having separate voltage and time delay settings. Stage 1 may be set to operate on either an IDMT or DT characteristic, whilst stage 2 may be set to DT only.

The IDMT characteristic available on the first stage is defined by the following formula:

t = TMS / (1 - M)

Where ;

TMS = Time Multiplier Setting

t = Operating Time in Seconds

M = Derived Residual Voltage / Relay Setting Voltage

Two stages are included for this NVD protection to account for applications which require both alarm and trip stages. In such applications, an alarm is usually required to be generated soon after the condition is detected which simply serves to indicate the presence of an earth fault on the system. It is common for the system to have been designed to withstand the associated healthy phase overvoltages for a number of hours following fault inception. This therefore gives time for system operators to locate and hopefully remove the fault condition.

This element should be driven from residual voltage (-3Vo). This can be derived from either the three phase VT inputs to the relay or the residual voltage input. The **VT Connect Mode, 3VT, 2VT+VResidual, 2VT+Vremanent** can be selected in the **CT and VT Ratios** menu.

Different VT ratio settings for the three modes of connection are available.

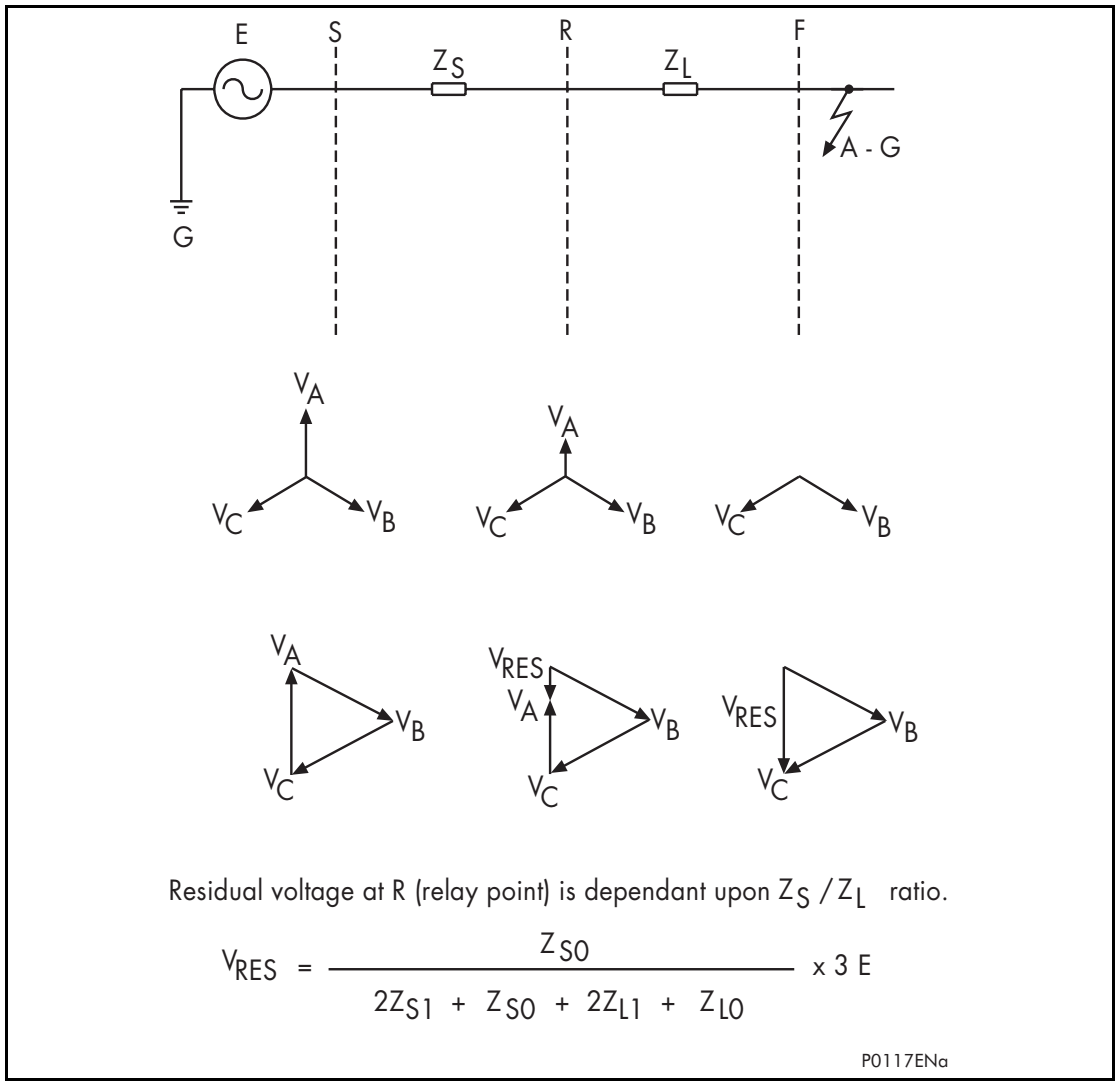

Figure 15: Residual voltage

AP

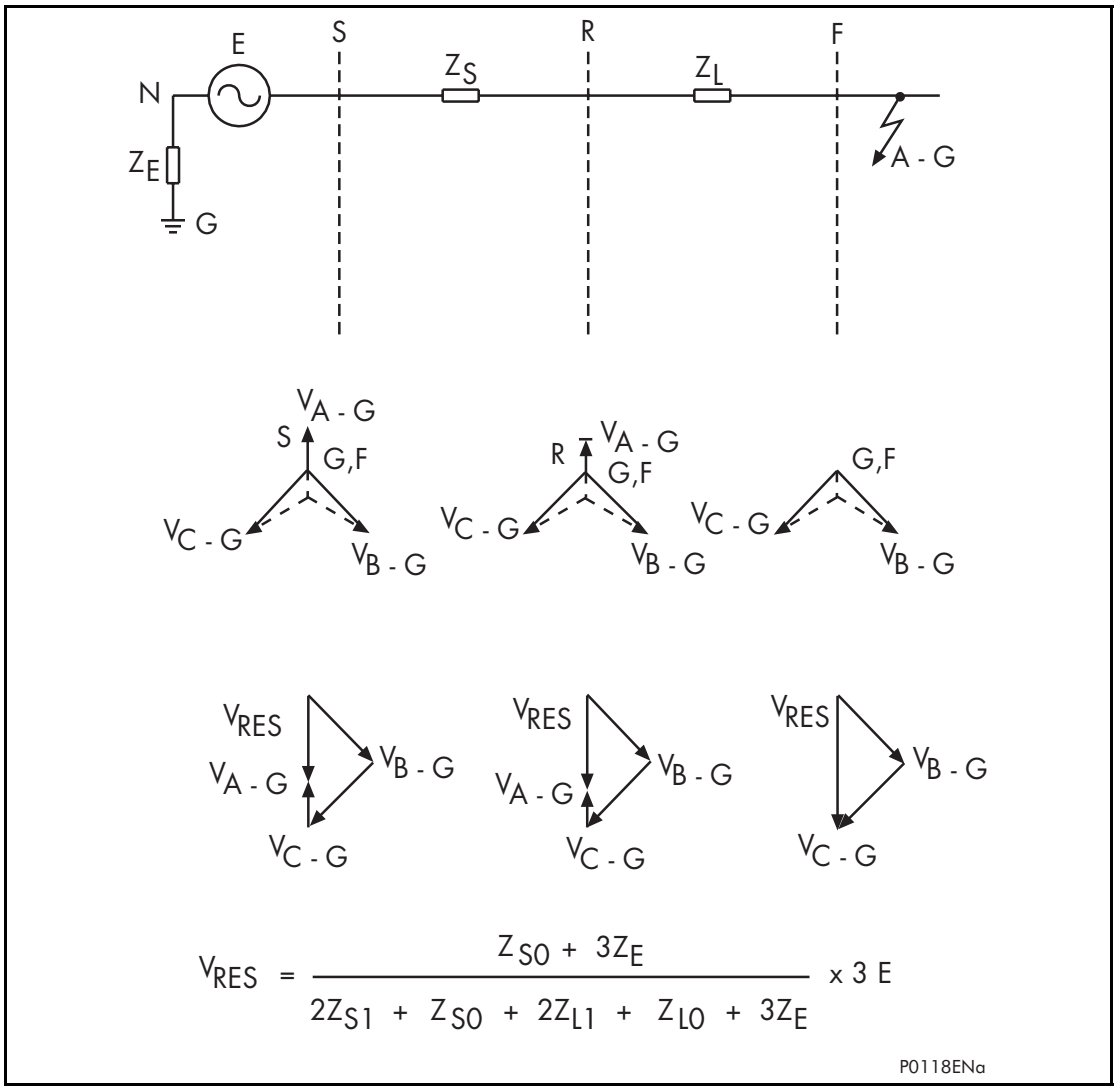

Figure 16: Residual voltage

2.6.1 Setting guidelines

The voltage setting applied to the elements is clearly dependent upon the magnitude of residual voltage that is expected to occur during the earth fault condition. This in turn is dependent upon the method of system earthing employed and is therefore application dependent. Figure 16 illustrates the formula used in calculating the expected residual voltage occurring for an earthfault on a resistance earthed system.

Note: The IDMT characteristics are selectable on the first stage of NVD in order that elements located at various points on the system may be time graded with one another.

2.7 Negative sequence protection (46)

Negative phase sequence current is generated from an unbalanced current condition, such as unbalanced loading, loss of one phase or single phase faults.

Consider the equivalent circuits for positive and negative phase sequence currents shown in Figure 17, the magnetizing impedance being neglected.

AP

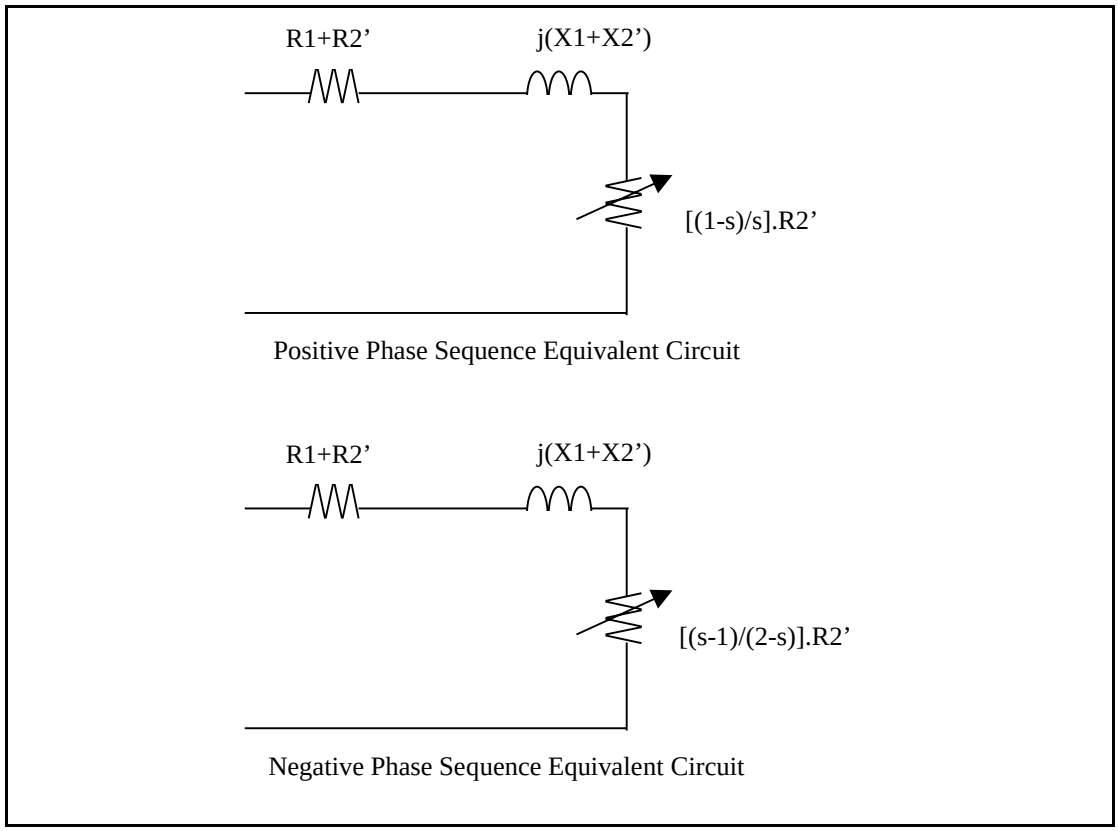

Figure 17: Equivalent circuits

With positive phase sequence voltages applied to the motor, a rotating field is set up between the stator and rotor. The resulting effect is that the direction of rotation of the rotor is equal to that of the applied field. With negative phase sequence voltages, the field will rotate in the opposite direction, cutting a rotating rotor conductor at almost twice the system frequency. The actual frequency of negative phase sequence voltage and current in the rotor circuit is equal to (2-s)f.

From the equivalent circuits ;

Motor positive sequence impedance at a given slip s by the formula :

$[(R_1 + R'_2/2\text{-}s)^2 + (X_1 + X'_2)^2]^{0.5}$

That means : $[(R_1 + R'_2)^2 + (X_1 + X'_2)^2]^{0.5}$ when s = 1 at standstill.

Motor negative sequence impedance at a given slip s by the formula :

$[(R_1 + R'_2/s)^2 + (X_1 + X'_2)^2]^{0.5}$

That means : $[(R_1 + R'_2/_2)^2 + (X_1 + X'_2)^2]^{0.5}$ when s << 1 at normal running speed.

Where ;

PPS = positive phase sequence

NPS = negative phase sequence

R_1 = PPS Stator Resistance

R'_1 = PPS Rotor Resistance Referred to Stator

X_1 = PPS Rotor Reactance

X'_1 = PPS Rotor Reactance Referred to Stator

R_2 = NPS Stator Resistance

R'_2 = NPS Rotor Resistance Referred to Stator

X_2 = NPS Rotor Reactance

X'_2 = NPS Rotor Reactance Referred to Stator

s = Slip

The value of resistance is generally much less than the leakage reactance. Therefore, neglecting the resistance term, the motor negative phase sequence impedance at normal running speed can be approximated to the positive phase sequence impedance at standstill.

At normal running speed;

$$\frac{\text{positive sequence impedance}}{\text{negative sequence impedance}} \cong \frac{\text{starting current}}{\text{normal load current}}$$

For example, if a motor has a starting current of six times the full load value, the negative sequence impedance would be about 1/6 the positive sequence impedance.

Consequently, the presence of 5% negative sequence voltage in the supply would result in approximately 30% of negative sequence current.

The a.c. resistance of the rotor conductor to the induced negative sequence current is greater due to the higher frequency [(2-s)f], causing skin effect. The heating effect of negative sequence current is therefore greater and increases the motor losses.

It is therefore essential to detect any negative sequence current present on the system and act accordingly before dangerous temperatures occur in the motor.

The P24x relay includes a number of methods for the detection of negative phase sequence currents, depending upon the cause of the unbalance. These methods are addressed in detail below.

AP

2.7.1 Loss of one phase while starting & running

2.7.1.1 Principle

If a motor is started with one phase open, it will remain stationary and it can be shown to draw a current equal to 0.866 times the normal starting current. Under these circumstances, the negative phase sequence component present in the current is equal to half the normal starting current value. This is an extreme condition, as this amount of negative phase sequence current will rapidly overheat the motor, and unless corrective action is taken, the motor will be seriously damaged.

Loss of one phase of the supply to a motor during normal running conditions, results in the following conditions :

Heating increases considerably due to high rotor losses caused by the -ve sequence current now present

Output of the motor is reduced and, depending on the load, an induction motor may stall or a synchronous motor may pull out of synchronism,

The motor current will increase.

One common factor in the aforementioned conditions is the presence of negative phase sequence current. The P24x relay therefore incorporates a negative phase sequence current element to detect such extreme operating conditions. This negative phase sequence current element operating time characteristic is of an inverse time nature and is governed by the following formula ;

$t = TMS * (1.2/I2/In)$ for $0.2 \leq I2/In \leq 2$

$t = TMS * 0.6$ for $I2/In > 2$

The element may be selectively enabled or disabled.

In addition to this, an independent, definite time alarm stage is provided.

2.7.1.2 Setting guidelines

This element should be set in excess of the anticipated negative phase sequence current resulting from asymmetric CT saturation during starting, but less than the negative phase sequence current resulting from loss of one phase during starting.

A typical setting for the negative sequence overcurrent element is 30% of the anticipated negative sequence current resulting from loss of one phase during starting. For a motor with a starting current to load current ratio of 6 to 1.

Therefore set :

I2>2 Current Set = 1/6 normal starting current or full load current

The setting for the alarm time delay is application dependent.

2.7.2 3 Phase voltage check (reverse phase detection) (47/27)

2.7.2.1 Principle

Incorrect phase rotation of the incoming supply to the motor will result in the motor rotating in the opposite direction. For certain directionally sensitive applications, such as lifts and conveyor belts, this is a potentially dangerous condition and must be detected rapidly.

Although the above condition does not result in the flow of negative phase sequence current in the motor, 100% negative phase sequence current will be presented to the measuring circuitry of the relay.

If the machine is allowed to rotate in the opposite direction, the thermal protection and negative phase sequence overcurrent element will detect the condition and trip the circuit breaker in their respective time delays. However, as stated above, it is sometimes undesirable to allow the motor to rotate at all.

For such applications, the P24x relay includes a 3 phase voltage check detector. This element monitors the input voltage rotation and magnitude. The positive sequence voltage should be greater than the negative sequence voltage and the phase voltages VA, VB and VC should be greater than the user settable threshold. If the aforementioned conditions are not satisfied then an alarm is raised. This alarm contact can be interlocked with the motor contactor or circuit breaker to prevent the motor from being energized until correct phase rotation and sufficient voltage exist on the system.

This feature requires a 52a circuit breaker auxiliary contact mapped to an opto input to get the information CBclosed/CB open.

2.7.2.2 Setting guidelines

The undervoltage interlock (**Start Low V Set**) is provided to prevent the motor attempting to start on reduced voltage. The setting is system dependent but may typically be set to 80% - 90% of Vn.

2.8 Start / stall protection (48/51LR/50S/14)

When a motor is started, it will draw a value of current in excess of full load rating for a set period of time, namely the starting time. It is normal practice to assume a constant starting current for the whole of the starting time.

The starting current will vary depending upon the type and method of starting utilized. If the motor is started direct-on-line (DOL), the current could easily reach 6 times full load current. However, when star/delta starting is utilized, the starting current will be $\sqrt{3}$ less than when DOL starting.

Should a motor stall whilst running, or be unable to start due to excessive loading, it will draw a current equivalent to the locked rotor current. Due to the fact that the level of starting current will be equal to the level of locked rotor current, it is clearly not possible to distinguish between 3 phase stalling and healthy starting, by monitoring current alone.

In the majority of cases the starting time of a normal induction motor is less than the maximum stall withstand time. Under this condition it is possible to discriminate on a time basis between the two conditions and thus provide protection against stalling.

However, where motors are used to drive high inertia loads, the stall withstand time may be less than the starting time. In such cases, it is not possible to discriminate between start and stall conditions by time alone.

The P24x relay provides extensive start and stall protection, in order that all of the aforementioned conditions may be accounted for. The methods used to achieve this are discussed in more detail below.

This feature requires a 52a circuit breaker auxiliary contact mapped to an opto input to get the information CBclosed/CB open.

2.8.1 Excessive start time/locked rotor protection - stall time > start time (51LR)

A motor may fail to accelerate for a number of reasons. For example, loss of one supply phase, mechanical failure, insufficient supply voltage, etc. As stated previously, failure of a machine to accelerate will result in excessive current being drawn by the motor. This current will generate extremely high temperatures within the machine. Coupled with the fact that the motor is without the added cooling normally provided by rotation, irreparable damage will result very quickly.

Where the stall withstand time is less than the starting time, it is possible to utilize a contact from a speed sensing device wired into a specified opto input (Speed Input: DDB 104) in conjunction with measurement of the phase current to detect a safe start.

Three methods are available for detecting a start and they are menu selectable. See the Operation chapter, *P24x/EN OP*, for detailed information.

2.8.1.1 Setting guidelines

The starting current threshold should be set greater than full load current, but less than motor starting current. Where the stall withstand time is greater than the starting time, timer **– Prol Start Time** - should be set 1 or 2 seconds above the motor starting time and less than the cold stall withstand time. The **Prolonged Start** needs to be set to **Enabled** for this function to operate.

Setting example :

Utilizing the previously specified motor parameters;

Starting current = 3 x Ith = 882A

Prolonged start time = 12 seconds.

These settings are illustrated graphically in figure 1.

2.8.2 Stall protection (50S)

2.8.2.1 Principle

An induction motor may stall for a number of reasons, such as overloading, undervoltage etc. When a machine stalls it will run down whilst drawing a current equal to the locked rotor current.

Where the stall withstand time is greater than the starting time, a stall condition during running is simply detected by the line current exceeding the programmed threshold. If the current fails to fall back below this threshold before the programmed time delay has elapsed, a trip can be initiated.

Note: This function is disabled when the relay detects a start condition.

2.8.2.2 Setting guidelines

The stall current threshold (**Stall Setting**) should be set greater than full load current, but less than motor stall current (which is usually equal to starting current). Its corresponding timer (**Stall Time**) should be set less than the motor hot stall withstand time. The **Stall Detection** needs to be set to **Enabled** for this function to operate.

Setting example :

Utilizing the previously specified motor parameters;

Stall Setting = 3 x I_{th} = 882 A

Stall Time = 6 seconds

These settings are illustrated graphically in figure 1.

2.8.3 Excessive start time/locked rotor protection - stall time < start time (14)

As the rotor resistance of an induction motor is proportional to slip, it will decrease during acceleration. When the motor is stationary, the rotating field in the air gap, set up by currents flowing in the stator winding will cut the rotor. This field will be traveling at synchronous speed relative to the rotor and will induce a voltage at system frequency, thus generating circulating currents in the rotor bars. At this frequency, the reactance of the rotor will cause the current to flow in the outer section of the rotor conductors; commonly known as the 'skin effect'. Since the current is occupying a smaller section of the rotor, the apparent impedance presented to it is increased, therefore the I^2R heating is greatly increased. As the motor accelerates during starting the slip begins to decrease and the current is able to occupy more of the rotor conductor. The apparent impedance therefore reduces along with the heating effect. The motor is therefore able to tolerate starting current for the starting time, but not locked rotor current.

The above description explains why, for certain applications, such as motors driving high inertia loads, the stall withstand time may be safely exceeded during starting, without resulting in an overtemperature condition within the motor. Consequently, since the stall withstand time is less than the start time, it is not possible to use time alone to distinguish between a start and a stall condition.

Where the stall withstand time is less than the starting time, it is possible to utilize a contact from a speed sensing device wired into a specified opto input (Speed Input: DDB 104) in conjunction with measurement of the phase current to detect a safe start.

2.8.3.1 Setting guidelines

The Starting current threshold (**Starting current**) should be set greater than full load current, but less than motor locked rotor current (usually equal to starting current). Its corresponding timer (**Stall Time**) should be set less than the motor cold stall withstand time. The **Stall Rotor-str** needs to be set to **Enabled** for this function to operate.

2.8.4 Number of starts limitation (66)

Repeated starting, or intermittent operation of a motor, may generate dangerously high temperatures within the motor, unless sufficient time is allowed for cooling between starts.

The P24x relay incorporates a number of starts limitation facilities. This limitation is fully programmable and is applicable to both hot and cold start conditions. A hot start is defined by a thermal state greater than 50% and a cold start is defined as a thermal state lower than 50%.

Restarting the motor from a hot thermal state :

For certain applications, it is not desirable to allow the motor time to cool down to a specified thermal state before a re-start is permitted. The P24x relay incorporates a number of features which allow a subsequent start from a hot thermal state, these are discussed in the section on 'thermal overload protection'.

The motor accumulated run time displayed in the menu cell “Motor Run Time” of the “Measurement 3” menu is initiated each time the switching device is closed and remains closed.

2.8.5 Anti-Backspin protection (27 Abs)

A motor may be driving a very high inertia load. Once the CB/Contactor supplying power to the motor is switched off, the rotor may continue to turn for a considerable length of time as it decelerates. The motor has now become a generator and applying supply voltage out of phase may result in catastrophic failure. In some other applications for example when a motor is on a down-hole pump, after the motor stops, the liquid may fall back down the pipe and spin the rotor backwards. It would be very undesirable to start the motor at this time. In these circumstances the anti-backspin function is used to detect when the rotor has completely stopped, in order to allow re-starting of the motor.

The operation of this function depends on the parameter **VT connecting mode**: If this is set to **2 VT + Vremanent**, then the function uses an undervoltage with the connected Phase-Phase remanent voltage. If not, the function uses only a time delay.

2.8.6 Setting guidelines for ABS protection

The voltage threshold setting for the anti-backspin protection **VRem Antibacks** should be set at some low value to indicate that the motor is stopped. The default setting of 10 V secondary is adequate for most applications.

If the **VT connecting mode** is set to **2 VT + Vremanent** the time delay **Antibacks Delay** must be set to an adequate time for the motor to stop after and the remanent voltage has dropped below the **VRem Antibacks** setting following a trip.

If **the VT connecting mode is not set to 2 VT + Vremanent** then the time delay **Antibacks Delay** must be set to an adequate time for the motor to stop after the trip. The default setting of 3000 s is adequate for the majority of applications.

AP

2.8.7 Low voltage protection (re-acceleration)

Following a transient dip in the supply voltage, a motor will attempt to re-accelerate. Under these circumstances it will draw a level of current exceeding the relay stall protection threshold, (**Stall Setting**). Consequently, for successful re-acceleration the P24x relay can be configured to temporarily inhibit the stall protection.

If a low voltage condition exists on the system for a time in excess of 100 ms, upon recovery of the voltage the relay will inhibit stall protection. Re-acceleration will be recognized if current above the set threshold is detected within 5 seconds of the voltage recovery. During this period the excessive start protection is enabled. This will provide protection in the event of unsuccessful re-acceleration. For example, a dip in the busbar voltage supplying several motors would result in each of them attempting re-acceleration. Subsequently, a large current will be drawn from the supply, thus further reducing the supply voltage, resulting in potential stalling of all machines. This would not occur during normal starting as a staggered approach is normally adopted.

This function is disabled during the starting period, and requires a 52a circuit breaker auxiliary contact mapped to an opto input to get the information CBclosed/CB open.

Setting Guidelines :

The low voltage threshold (**Reac Low V Set**) is very much system dependent, however a typical setting may be 0.8-0.9 Vn.

2.9 Undervoltage protection function (27)

2.9.1 Principle

Undervoltage conditions may occur on a power system as a result of increased loading, fault conditions or incorrect regulation. Transient voltage dips may allow successful motor re-acceleration. However, sustained undervoltage conditions will result in motor stalling. Time delayed undervoltage protection is therefore commonly applied.

The undervoltage protection included within the P24x relays consists of two independent phase to phase measuring stages.

Two stages are included to provide both alarm and trip stages, where required. Alternatively, different time settings may be required depending upon the severity of the voltage dip. i.e. motor loads will be able to withstand a small voltage depression for a longer time than if a major voltage excursion were to occur. Consequently, two stages could be used; one with a higher setting and a longer time delay and vice versa for the second stage.

The inverse characteristic is given by the following formula ;

$t = TMS / (1 - M)$

Where ;

TMS = Time Multiplier Setting

t = operating time in seconds

M = Applied input voltage/Relay setting voltage

2.9.2 Setting guidelines for undervoltage protection

The voltage threshold setting for the undervoltage protection should be set at some value below the voltage excursions which may be expected under normal system operating conditions. Clearly, this threshold is dependent upon the system in question but typical healthy system voltage excursions may be in the order of -10% of nominal value.

Similar comments apply with regard to a time setting for this element, i.e. the required time delay is dependent upon the time for which the motor is able to withstand depressed voltage. A typical time setting may be in the order of 0.5 seconds.

The setting **Inhibit During St** must be set to **Enabled** to allow the voltage decrease during motor starting.

This feature must be interlocked with the motor control gear in order to ensure that it is disabled when the motor is stopped. The interlock is made by the CB Close signal.

2.10 Loss-of-load protection (37)

2.10.1 Principle

In order to detect loss of motor load the P24x relay includes a low forward power element. It can be used, for example, to protect electric pumps against becoming unprimed or to stop a motor in the event of a failure in the mechanical transmission.

> **Note:** A low forward power condition can only be established when the circuit breaker is closed and the active power calculated is above zero.

Where rated power cannot be reached during starting (for example where the motor is started with no connected load) it will be necessary to inhibit this function for a set time.

This feature requires a 52a circuit breaker auxiliary contact mapped to an opto input to get the information CBclosed/CB open.

2.10.2 Setting guidelines

The setting of this element is very much system dependent. However, it will typically be set to 10-20% below minimum load.

Referring to the previous example details, the motor rated power will be:

$P = \sqrt{3} \times 293 \times 11000 = 5.6$ MVA

Assuming that minimum loading may be 70%, the minimum power threshold may be set to 80% of this value i.e. 300 kW.

P< Power Set = 300 kW

The time delay, **P<Drop-off time**, should be set in excess of the time between motor starting and the load being established.

The time delay on pickup, **P<Time Delay**, is application dependent.

2.11 Synchronous motor protection

In the majority of applications, a synchronous motor would be started as an induction motor. If this is the case the aforementioned protection elements apply equally to both induction and synchronous motors. However, for the complete protection of synchronous motors, additional protective features will be required. These features are discussed in the following sections.

2.11.1 Out-of-step protection (under power factor) (55)

A synchronous motor may decelerate and fall out of step when it is subjected to a mechanical overload exceeding its maximum available output. It may also lose synchronism from a fall in the field current or supply voltage. An out-of-step condition will subject the motor to undesirable overcurrent and pulsating torque, leading to eventual stalling.

When loss of synchronism is detected the motor must be disconnected from the supply.

Upon loss of synchronism a heavy current at a very low power factor is drawn from the supply. The P24x is able to monitor this change in power factor when the motor pole slips, thus allowing appropriate action to be taken. If the power factor passes under a defined threshold for a defined time, a trip is generated.

This feature requires a 52a circuit breaker auxiliary contact mapped to an opto input to get the information CBclosed/CB open.

Setting Guidelines :

The ability of a motor to run at a low power factor will be design dependent.

AP

For a unity power factor machine, the following settings will be typical :

Power factor = 0.9,

Time delay = 50 ms,

Drop-off time delay = 1 or 2 seconds above the start time of the machine.

However, some machines are designed to operate at power factors as low as 0.7, in this case the setting will have to be adjusted accordingly.

2.11.2 Reverse power (loss-of-supply) (32R)

On loss of supply, a synchronous motor should be disconnected if the supply could be restored automatically or without the machine operator's knowledge. This is to avoid the possibility of the supply being restored out of phase with the motor generated emf.

This feature requires a 52a circuit breaker auxiliary contact mapped to an opto input to get the information CBclosed/CB open.

2.11.2.1 Underfrequency (81U)

If the motor is loaded, it will decelerate fairly quickly on loss of supply and the frequency of the terminal voltage will fall. The P24x relay is able to detect the fall in frequency and take appropriate action. This underfrequency element is a two stage device, which can be used for both alarm and trip purposes.

This feature requires a 52a circuit breaker auxiliary contact mapped to an opto input to get the information CBclosed/CB open.

2.11.3 Setting guidelines :

This setting is very much system dependent, since it may be possible for the frequency of the supply to deviate during normal conditions.

Small source frequency changes may arise following power transmission disturbances or immediately following a sudden increase in system loading. Significant frequency variations are relatively rare for large interconnected power systems. In some regions of the world, significant drops in system frequency have been experienced due to unavoidable deficit of generation during peak load periods.

So as not to trip the motor unnecessarily, it is therefore important to determine the minimum system frequency and set the underfrequency element below this value.

2.11.3.1 Overvoltage (59)

If the supply busbars have no other load connected and the motor is not loaded, upon loss-of-supply the motor terminal voltage could rise instantaneously to 20-30% due to the open circuit regulation of the machine.

The P24x relay has an overvoltage feature which can be used to detect this condition. It consists of two independent definite time measuring elements which measure phase-phase voltage.

2.11.3.2 Setting guidelines :

The setting is very much system dependent. However, it would typically be set to 15% above rated voltage. Therefore for a 110 V VT, the relay setting would be 1.15 x 110 = 126.5 V. The timer would be motor design and application dependent.

2.12 Field failure protection function (40)

Complete loss of excitation may arise as a result of accidental tripping of the excitation system, an open circuit or short circuit occurring in the excitation DC circuit, flashover of any slip rings or failure of the excitation power source. The field failure protection of the P24x consists of two elements, an impedance element with two time delayed stages and a power factor alarm element.

When the excitation of a synchronous motor fails not enough synchronizing torque is provided to keep the rotor locked in step with the stator rotating magnetic field. The machine would then be excited from the power system and hence be operating as an induction motor. This results in an increasing level of reactive power being drawn from the power system at a highly lagging power factor. If the field excitation is too low to meet the load requirements the synchronous motor can pole slip. An out-of-step (pole slip) condition will subject the motor to undesirable overcurrent and pulsating torque, leading to eventual stalling.

Operation as an induction motor under field failure conditions relies upon the ability of the rest of the system being able to supply the required reactive power to the machine. If the system cannot supply enough reactive power the system voltage will drop and the system may become unstable. This could occur if a large motor running at high power suffers a loss of field when connected to a relatively weak system. To ensure fast tripping under this condition one of the impedance elements can be used with a short time delay. This can trip the machine quickly to preserve system stability. This element should have a small diameter to prevent tripping under power swinging conditions. The second impedance element, set with a larger diameter, can provide detection of field failure under lightly loaded conditions. This second element should be time delayed to prevent operation during power swing conditions.

The P24x offers a power factor alarm element in the field failure protection which can operate when the motor is running at a lagging power factor caused by a loss of excitation. There is also a dedicated out of step protection function based on power factor measurement, see section 2.11.1

For large motors impedance based loss of excitation is recommended which provides improved protection for partial loss of field in addition to complete loss.

The field failure protection impedance elements are also provided with an adjustable delay on reset (delayed drop off) timer. This time delay can be set to avoid delayed tripping that may arise as a result of cyclic operation of the impedance measuring element, during the period of pole slipping following loss of excitation.

Some care would need to be exercised in setting this timer, since it could make the field failure protection function more likely to give an unwanted trip in the case of stable power swinging. The impedance element trip time delay should therefore be increased when setting the reset time delay.

2.12.1 Setting guidelines for field failure protection

Each stage of field failure protection may be selected as **Enabled** or **Disabled**, within the **FFail1 Status, FFail2 Status** cells. The power factor alarm element may be selected as Enabled or Disabled within the **FFail Alm** Status cell.

2.12.1.1 Impedance element 1

To quickly detect a loss-of field condition, the diameter of the field failure impedance characteristic (**FFail1 Xb1**) should be set as large as possible, without conflicting with the impedance that might be seen under normal stable conditions or during stable power swing conditions.

Where a motor is operated with a rotor angle of less than 90° and never at a leading power factor, it is recommended that the diameter of the impedance characteristic, **FFail1 Xb1**, is set equal to the machine direct-axis synchronous reactance. The characteristic offset, **FFail1 -Xa1** should be set equal to half the direct-axis transient reactance (0.5Xd') in secondary ohms.

FFail1 Xb1 = Xd

FFail1 -Xa1 = 0.5 Xd'

Where:

Xd = machine direct-axis synchronous reactance in ohms

Xd' = machine direct-axis transient reactance in ohms

Where high-speed voltage regulation equipment is used it may be possible to operate motors at rotor angles up to 120°. In this case, the impedance characteristic diameter, **FFail1 Xb1**, should be set to 50% of the direct-axis synchronous reactance (0.5Xd) and the offset, F**Fail1 -Xa1**, should be set to 75% of the direct axis transient reactance (0.75Xd').

FFail1 Xb1 = 0.5 Xd

FFail1 -Xa1 = 0.75 Xd'

The field failure protection time delay, **FFail1 Time Delay**, should be set to minimize the risk of operation of the protection function during stable power swings following system disturbances. However, it should be ensured that the time delay is not so long that stator winding or rotor thermal damage will occur. A typical stator winding should be able to withstand a current of 2.0 p.u. for the order of 15 s. It may also take some time for the impedance seen at the generator terminals to enter the characteristic of the protection. A time delay less than 10 s would typically be applied. The minimum permissible delay, to avoid problems of false tripping due to stable power swings with the above impedance settings, would be of the order of 0.5 s.

The protection reset (delayed drop off) timer, **FFail1 DO Timer**, would typically be set to 0 s to give instantaneous reset of the stage. A setting other than 0 s can be used to provide an integrating function for instances when the impedance may cyclically enter and exit the characteristic. This can allow detection of pole slipping conditions. When settings other than 0 s are used the protection pick-up time delay, **FFail1 Time Delay**, should be increased to prevent mal-operation during stable power swing conditions.

It is desirable not to trip on the impedance field failure element until the field has been applied. Therefore, this feature can be selectively blocked in the PSL (FFail Block: DDB 117) until the motor comes up to speed and the field is applied.

2.12.1.2 Impedance element 2

The second impedance element can be set to give fast operation when the field fails under high load conditions. The diameter of the characteristic, **FFail2 Xb**, should be set to 1 p.u. The characteristic offset, **FFail2 -Xa2**, should be set equal to half the direct-axis transient reactance (0.5Xd').

$$\text{FFail2 Xb2} = \frac{kV^2}{MVA}$$

FFail2 -Xa2 = 0.5 Xd'

This setting will detect a field failure condition from full load to about 30% load.

The time delay, **FFail2 Time Delay**, can be set to instantaneous, i.e. 0 s.

The protection reset (delayed drop off) timer, F**Fail2 DO Timer**, would typically be set to 0 s to give instantaneous reset of the stage. A setting other than 0 s can be used to provide an integrating function for instances when the impedance may cyclically enter and exit the characteristic. This can allow detection of pole slipping conditions. When settings other than 0s are used the protection pick-up time delay, **FFail2 Time Delay**, should be increased to prevent mal-operation during stable power swing conditions.

It is desirable not to trip on the impedance field failure element until the field has been applied. Therefore, this feature can be selectively blocked in the PSL (FFail Block: DDB 117) until the motor comes up to speed and the field is applied.

2.12.1.3 Power factor element

The power factor alarm can be used to signal to the operator that excitation has failed.

The angle setting, **FFail Alm Angle**, should be set to greater than any angle that the machine could be operated at in normal running. A typical setting would be 25°, equivalent to a power factor of 0.9 lagging. The power factor element time delay, **FFail Alm. Delay**, should be set longer than the (**FFail1 Time Delay**). This is to prevent operation of the alarm element under transient conditions such as power swinging and to provide discrimination with the conventional field failure impedance elements.

2.13 Circuit breaker failure protection (50BF)

Following inception of a fault one or more main protection devices will operate and issue a trip output to the circuit breaker(s) associated with the faulted circuit. Operation of the circuit breaker is essential to isolate the fault, and prevent damage/further damage to the power system. For transmission/sub-transmission systems, slow fault clearance can also threaten system stability. It is therefore common practice to install circuit breaker failure protection, which monitors that the circuit breaker has opened within a reasonable time. If the fault current has not been interrupted following a set time delay from circuit breaker trip initiation, breaker failure protection (CBF) will operate.

CBF operation can be used to backtrip upstream circuit breakers to ensure that the fault is isolated correctly. CBF operation can also reset all start output contacts, ensuring that any blocks asserted on upstream protection are removed.

2.13.1 Breaker failure protection configurations

The circuit breaker failure protection incorporates two timers, **CB Fail 1 Timer** and **CB Fail 2 Timer**, allowing configuration for the following scenarios:

Simple CBF, where only **CB Fail 1 Timer** is enabled. For any protection trip, the **CB Fail 1 Timer** is started, and normally reset when the circuit breaker opens to isolate the fault. If breaker opening is not detected, **CB Fail 1 Timer** times out and closes an output contact assigned to breaker fail (using the programmable scheme logic). This contact is used to backtrip upstream switchgear, generally tripping all infeeds connected to the same busbar section.

A re-tripping scheme, plus delayed backtripping. Here, **CB Fail 1 Timer** is used to route a trip to a second trip circuit of the same circuit breaker. This requires duplicated circuit breaker trip coils, and is known as re-tripping. Should re-tripping fail to open the circuit breaker, a backtrip may be issued following an additional time delay. T he backtrip uses **CB Fail 2 Timer**, which is also started at the instant of the initial protection element trip.

CBF elements **CB Fail 1 Timer** and **CB Fail 2 Timer** can be configured to operate for trips triggered by protection elements within the relay or via an external protection trip. The latter is achieved by allocating one of the relay opto-isolated inputs to **External Trip** using the programmable scheme logic.

2.13.2 Reset mechanisms for breaker fail timers

It is common practice to use low set undercurrent elements in protection relays to indicate that circuit breaker poles have interrupted the fault or load current, as required. This covers the following situations:

Where circuit breaker auxiliary contacts are defective, or cannot be relied upon to definitely indicate that the breaker has tripped.

Where a circuit breaker has started to open but has become jammed. This may result in continued arcing at the primary contacts, with an additional arcing resistance in the fault current path. Should this resistance severely limit fault current, the initiating protection element may reset. Therefore, reset of the element may not give a reliable indication that the circuit breaker has opened fully.

For any protection function requiring current to operate, the relay uses operation of undercurrent elements (I<) to detect that the necessary circuit breaker poles have tripped and reset the CB fail timers. However, the undercurrent elements may not be reliable methods of resetting circuit breaker fail in all applications. For example:

AP

Where non-current operated protection, such as under/overvoltage or underfrequency, derives measurements from a line connected voltage transformer. Here, I< only gives a reliable reset method if the protected circuit would always have load current flowing. Detecting drop-off of the initiating protection element might be a more reliable method.

Where non-current operated protection, such as under/overvoltage or under/overfrequency, derives measurements from a busbar connected voltage transformer. Again using I< would rely upon the feeder normally being loaded. Also, tripping the circuit breaker may not remove the initiating condition from the busbar and hence drop-off of the protection element may not occur. In such cases, the position of the circuit breaker auxiliary contacts may give the best reset method.

Resetting of the CBF is possible from a breaker open indication or from a protection reset. In these cases resetting is only allowed provided the undercurrent elements have also reset. The resetting options are summarized in the following table:

Initiation (menu selectable)	CB fail timer reset mechanism
Current based protection	The resetting mechanism is fixed (e.g. 50/51/46/87..) [IA< operates] & [IB< operates] & [IC< operates] & [IN< operates]
Sensitive earth fault element	The resetting mechanism is fixed. [ISEF< operates]
Non-current based protection (e.g. 27/59/81/32R..)	Three options are available. The user can select from the following options. [All I< and IN< elements operate] [Protection element reset] AND [All I< and IN< elements operate] CB open (all 3 poles) AND [All I< and IN< elements operate]

Initiation (menu selectable)	CB fail timer reset mechanism
External protection	Three options are available. The user can select any or all of the options. [All I< and IN< elements operate] [External trip reset] AND [All I< and IN< elements operate] CB open (all 3 poles) AND [All I< and IN< elements operate]

Table 8: CBF resetting options

2.13.3 Typical breaker fail timer settings

Typical timer settings to use are as follows:

CB fail reset mechanism	tBF time delay	Typical delay for 2½ cycle circuit breaker
Initiating element reset	CB interrupting time + element reset time (max.) + error in tBF timer + safety margin	50 + 50 + 10 + 50 = 160 ms
CB open	CB auxiliary contacts opening/closing time (max.) + error + safety margin	50 + 10 + 50 = 110 ms in tBF timer
Undercurrent elements	CB interrupting time + undercurrent element (max.) + operating time	50 + 12 + 50 = 112 ms safety margin

Table 9: Typical CBF timer settings

AP

Note: All CB Fail resetting involves the operation of the undercurrent elements. Where element reset or CB open resetting is used the undercurrent time setting should still be used if this proves to be the worst case.

The examples above consider direct tripping of a 2½ cycle circuit breaker.

Note: Where auxiliary tripping relays are used, an additional 10-15 ms must be added to allow for trip relay operation.

2.14 Current loop inputs and outputs

2.14.1 Current loop inputs

Four analog (or current loop) inputs are provided for transducers with ranges of 0 - 1 mA,

0 - 10 mA, 0 - 20 mA or 4 - 20 mA. The analog inputs can be used for various transducers such as vibration monitors, tachometers and pressure transducers. Associated with each input there are two protection stages, one for alarm and one for trip. Each stage can be individually enabled or disabled and each stage has a definite time delay setting. The Alarm and Trip stages can be set for operation when the input current is above the Alarm/Trip threshold. Associated with each current loop input are units (None, A, V, Hz, W, Var, VA, °C, F, %, s).

2.14.2 Setting guidelines for current loop inputs

For each analog input, the user can define the following:

- The current input range: 0 - 1 mA, 0 - 10 mA, 0 - 20 mA, 4 - 20 mA
- The analog input unit (A, V, Hz, W, Var, VA, °C, F, %, s, none)
- Analog input minimum value (setting range A: 0 to 100 K, V: 0 to 20 k, Hz: 0 to 100, W/VAr: +/- 1.41 G, VA: 0 to 1.41 G, °C: -40 to 400, F: -40 to 752, %: 0 to 150, s: 0 to 300, none -32.5 k to 50 k)
- Analog input maximum value (setting range as above)
- Alarm threshold, range within the maximum and minimum set values
- Alarm delay

- Trip threshold, range within maximum and minimum set values
- Trip delay

Each current loop input can be selected as Enabled or Disabled. The Alarm and Trip stages operate when the input current is above the input value. One of four types of analog inputs can be selected for transducers with ranges of 0 - 1 mA, 0 - 10 mA, 0 - 20 mA or 4 - 20 mA.

The Maximum and Minimum settings allow the user to enter the range of physical or electrical quantities measured by the transducer.

The user can select the unit of the measurement - None, A, V, Hz, W, Var, VA, °C, F, %, s. For example, if the analog input is used to monitor a power measuring transducer, the appropriate unit would be W.

The alarm and trip threshold settings should be set within the range of physical or electrical quantities defined by the user. The relay will convert the current input value into its corresponding transducer measuring value for the protection calculation.

For example if the Minimum is –1000 and the Maximum is 1000 for a 0 - 10 mA input, an input current of 10 mA is equivalent to a measurement value of 1000, 5 mA is 0 and 1mA is –800. If the Minimum is 1000 and the Maximum is -1000 for a 0 - 10 mA input, an input current of 10 mA is equivalent to a measurement value of –1000, 5 mA is 0 and 1 mA is 800. These values are available for display in the **Analog Input 1/2/3/4** cells in the **MEASUREMENTS 3** menu.

2.14.3 Current loop outputs

Four analog current outputs are provided with ranges of 0 - 1 mA, 0 - 10 mA, 0 - 20 mA or

AP

4 - 20 mA which can alleviate the need for separate transducers. These may be used to feed standard moving coil ammeters for analog indication of certain measured quantities or into a SCADA using an existing analog RTU.

The outputs can be assigned to any of the following relay measurements:

- Magnitudes of IA, IB, IC, IN
- IA RMS, IB RMS, IC RMS
- Magnitudes of VAB, VBC, VCA, VAN, VBN, VCN, VN
- VAN RMS, VBN RMS, VCN RMS
- Frequency
- Three-phase active, reactive and apparent power, Three-phase power factor
- RTD temperatures
- Number of Hot Starts Allowed, Thermal State, Time to Thermal Trip, Time to Next Start

The user can set the measuring range for each analog output. The range limits are defined by the Maximum and Minimum settings. This allows the user to “zoom in” and monitor a restricted range of the measurements with the desired resolution. The voltage, current and power quantities are in primary quantities.

2.14.4 Setting guidelines for current loop outputs

One of four types of analog output can be selected for transducers with ranges of 0 - 1 mA, 0 - 10 mA, 0 - 20 mA or 4 - 20 mA. The 4 - 20 mA range is often used so that an output current is still present when the measured value falls to zero. This is to give a fail safe indication and may be used to distinguish between the analog transducer output becoming faulty and the measurement falling to zero.

The Maximum and Minimum settings allow the user to enter the measuring range for each analog output. The range, step size and unit corresponding to the selected parameter is shown in the table in the Operating chapter, *P24x/EN OP*. This allows the user to “zoom in” and monitor a restricted range of the measurements with the desired resolution.

The voltage, current and power quantities are in primary quantities. The relationship of the output current to the value of the measurand is of vital importance and needs careful consideration. Any receiving equipment must, of course, be used within its rating but, if possible, some kind of standard should be established.

One of the objectives must be to have the capability to monitor the voltage over a range of values, so an upper limit must be selected, typically 120%. However, this may lead to difficulties in scaling an instrument.

The same considerations apply to current transducers outputs and with added complexity to watt transducers outputs, where both the voltage and current transformer ratios must be taken into account.

Some of these difficulties do not need to be considered if the transducer is only feeding, for example, a SCADA outstation. Any equipment which can be programmed to apply a scaling factor to each input individually can accommodate most signals. The main consideration will be to ensure that the transducer is capable of providing a signal right up to the full-scale value of the input, that is, it does not saturate at the highest expected value of the measurand.

2.15 Phase rotation

A facility is provided in the P241/242/243 to maintain correct operation of all the protection functions even when the motor is running in a reverse phase sequence. This is achieved through user configurable settings available for the two setting groups.

The default phase sequence for P24x is the clockwise rotation ABC. However, some applications may require an intermediate anti-clockwise phase rotation of ACB.

In process industry there is often a common practice to reverse two phases to facilitate the process, using phase reversal switches. The following sections describe some common scenarios and their effects.

For such applications the correct phase rotation settings can be applied for a specific operating mode and phase configuration in different setting groups. The phase configuration can then be set by selecting the appropriate setting group. This method of selecting the phase configuration removes the need for external switching of CT circuits or the duplication of relays with connections to different CT phases. The phase rotation settings should only be changed when the motor is off-line so that transient differences in the phase rotation between the relay and power system due to the switching of phases don't cause operation of any of the protection functions. To ensure that setting groups are only changed when the machine is off-line the changing of the setting groups could be interlocked with the IA/IB/IC undercurrent start signals and an undervoltage start signal in the PSL.

All the protection functions that use the positive and negative sequence component of voltage and current will be affected (Thermal Overload, 3 Ph Volt Check, Negative Sequence O/C, VT Supervision). The motor differential protection is not affected, since the phase reversal applies to CT1 and CT2 in the same way.

3 APPLICATION OF NON-PROTECTION FUNCTIONS

3.1 VT supervision

The voltage transformer supervision (VTS) feature is used to detect failure of the ac voltage inputs to the relay. This may be caused by internal voltage transformer faults, overloading, or faults on the interconnecting wiring to relays. This usually results in one or more VT fuses blowing. Following a failure of the ac voltage input there would be a misrepresentation of the phase voltages on the power system, as measured by the relay, which may result in mal-operation.

The VTS logic in the relay is designed to detect the voltage failure, and automatically adjust the configuration of protection elements whose stability would otherwise be compromised. A time-delayed alarm output is also available.

3.1.1 Setting the VT supervision element

The VT supervision, if enabled, then the following operations will occur upon detection of VTS.

- VTS provides alarm indication.
- Blocking of voltage dependent protection elements.
- The VTS block will be latched after a user settable time delay 'VTS Time Delay'. Once the signal has latched then resetting is available, provided the VTS condition has been removed and the 3 phase voltages have been restored above the phase level detector settings or CB has been opened.

The **VTS I> Inhibit** overcurrent setting is used to inhibit the voltage transformer supervision in the event of a loss of all 3 phase voltages caused by a close up 3 phase fault occurring on the system following closure of the CB to energize the line. This element should be set in excess of any non-fault based currents on line energization (load, line charging current, transformer inrush current if applicable) but below the level of current produced by a close up three-phase fault.

This **VTS I2> Inhibit** NPS overcurrent setting is used to inhibit the voltage transformer supervision in the event of a fault occurring on the system with negative sequence current above this setting

The NPS current pick-up threshold must be set higher than the negative phase sequence current due to the maximum normal load unbalance on the system. This can be set practically at the commissioning stage, making use of the relay measurement function to display the standing negative phase sequence current, and setting at least 20% above this figure.

The delta (superimposed) phase current setting is used to distinguish between a close up 3 phase fault and a 3 phase VT failure condition under load conditions. For a close up 3 phase fault there will be a loss of 3 phase voltage but there will be a delta change in the measured current. For a 3 phase VT failure where there will a loss of 3 phase voltage but no delta change in the measured current.

The **Delta I>** superimposed current setting is used to detect the change in current for a close up 3 phase fault when the CB is closed and block the VTS. This element should be set less than the superimposed current due to a 3 phase fault. The default setting of 0.1In is adequate for the majority of applications.

The **Threshold 3P** undervoltage setting is used to indicate a loss of 3 phase voltage that could be caused by a 3 phase VT fail condition or a close up 3 phase fault. The default setting of 30 V is adequate for the majority of applications.

3.2 CT supervision

The current transformer supervision feature is used to detect failure of one or more of the ac phase current inputs to the relay. Failure of a phase CT or an open circuit of the interconnecting wiring can result in incorrect operation of any current operated element. Additionally, interruption in the ac current circuits risks dangerous CT secondary voltages being generated.

3.2.1 Setting the CT supervision element

The residual voltage setting, **CTS1/2 Vn< Inhibit** and the residual current setting, **CTS1/2 In> set**, should be set to avoid unwanted operation during healthy system conditions.

For example **CTS1/2 Vn< Inhibit** should be set to 120% of the maximum steady state residual voltage. The **CTS1/2 In> set** will typically be set below minimum load current. The time-delayed alarm, **CTS1/2 Time Delay**, is generally set to 5 seconds.

Where the magnitude of residual voltage during an earth fault is unpredictable, the element can be disabled to prevent a protection elements being blocked during fault conditions.

3.3 Trip circuit supervision (TCS)

The trip circuit, in most protective schemes, extends beyond the relay enclosure and passes through components such as fuses, links, relay contacts, auxiliary switches and other terminal boards. This complex arrangement, coupled with the importance of the trip circuit, has led to dedicated schemes for its supervision.

Several trip circuit supervision schemes with various features can be produced with the P24x range. Although there are no dedicated settings for TCS, in the P24x, the following schemes can be produced using the programmable scheme logic (PSL). A user alarm is used in the PSL to issue an alarm message on the relay front display. If necessary, the user alarm can be re-named using the menu text editor to indicate that there is a fault with the trip circuit.

3.3.1 TCS scheme 1

3.3.1.1 Scheme description

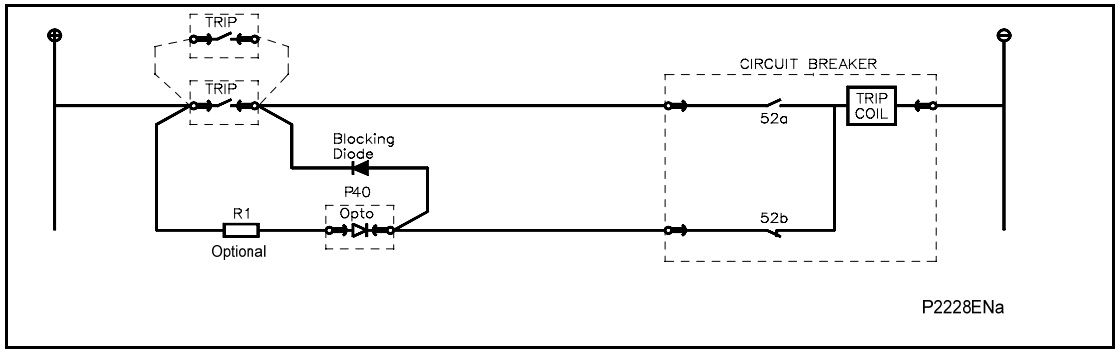

Figure 18: TCS scheme 1

This scheme provides supervision of the trip coil with the breaker open or closed, however, pre-closing supervision is not provided. This scheme is also incompatible with latched trip contacts, as a latched contact will short out the opto for greater than the recommended DDO timer setting of 400 ms. If breaker status monitoring is required a further 1 or 2 opto inputs must be used.

Note: A 52a CB auxiliary contact follows the CB position and a 52b contact is the opposite.

When the breaker is closed, supervision current passes through the opto input, blocking diode and trip coil. When the breaker is open, current still flows through the opto input and into the trip coil via the 52b auxiliary contact. Hence, no supervision of the trip path is provided whilst the breaker is open. Any fault in the trip path will only be detected on CB closing, after a 400 ms delay.

Resistor R1 is an optional resistor that can be fitted to prevent mal-operation of the circuit breaker if the opto input is inadvertently shorted, by limiting the current to <60 mA. The resistor should not be fitted for auxiliary voltage ranges of 30/34 volts or less, as satisfactory operation can no longer be guaranteed. The table below shows the appropriate resistor value and voltage setting (OPTO CONFIG menu) for this scheme.

This TCS scheme will function correctly even without resistor R1, since the opto input automatically limits the supervision current to less that 10 mA. However, if the opto is accidentally shorted the circuit breaker may trip.

Auxiliary voltage (Vx)	Resistor R1 (ohms)	Opto voltage setting with R1 fitted
24/27	-	-
30/34	-	-
48/54	1.2 k	24/27
110/250	2.5 k	48/54
220/250	5.0 k	110/125

Table 10: description needed? Recommended resistor value and opto voltage settings

Note: When R1 is not fitted the opto voltage setting must be set equal to supply voltage of the supervision circuit.

3.3.2 Scheme 1 PSL

Figure 18 shows the scheme logic diagram for the TCS scheme 1. Any of the available opto inputs can be used to indicate whether or not the trip circuit is healthy. The delay on drop off timer operates as soon as the opto is energized, but will take 400 ms to drop off/reset in the event of a trip circuit failure. The 400 ms delay prevents a false alarm due to voltage dips caused by faults in other circuits or during normal tripping operation when the opto input is shorted by a self-reset trip contact. When the timer is operated the NC (normally closed) output relay opens and the LED and user alarms are reset.

AP

The 50 ms delay on pick-up timer prevents false LED and user alarm indications during the relay power up time, following an auxiliary supply interruption.

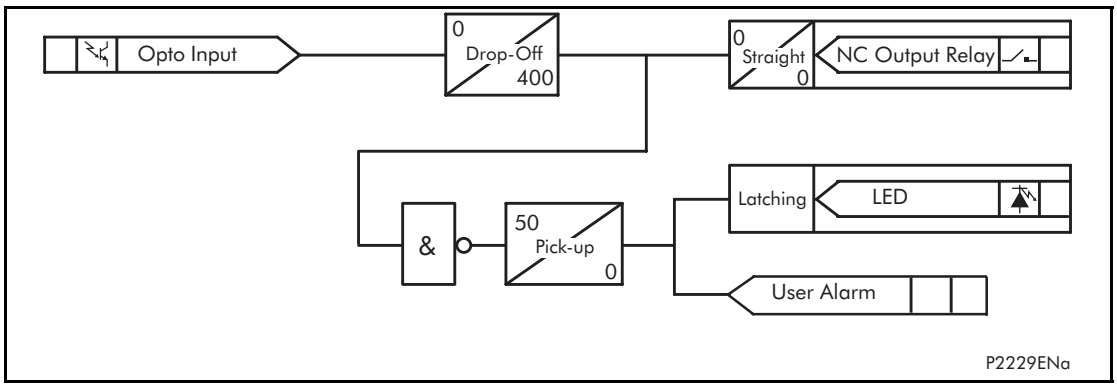

Figure 19: PSL for TCS schemes 1 and 3

3.3.3 TCS scheme 2

3.3.3.1 Scheme description

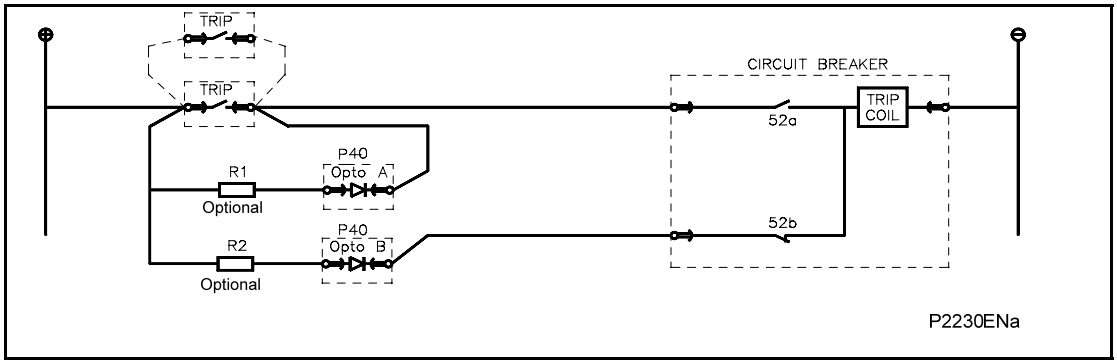

Figure 20: TCS scheme 2

Much like scheme 1, this scheme provides supervision of the trip coil with the breaker open or closed and also does not provide pre-closing supervision. However, using two opto inputs allows the relay to correctly monitor the circuit breaker status since they are connected in series with the CB auxiliary contacts. This is achieved by assigning Opto A to the 52a contact and Opto B to the 52b contact. Provided opto's A and B are connected to CB Closed 3 Ph (DDB 105) and CB Open 3ph (DDB 106) the relay will correctly monitor the status of the breaker. This scheme is also fully compatible with latched contacts as the supervision current will be maintained through the 52b contact when the trip contact is closed.

When the breaker is closed, supervision current passes through opto input A and the trip coil. When the breaker is open current flows through opto input B and the trip coil. As with scheme 1, no supervision of the trip path is provided whilst the breaker is open. Any fault in the trip path will only be detected on CB closing, after a 400 ms delay.

As with scheme 1, optional resistors R1 and R2 can be added to prevent tripping of the CB if either opto is shorted. The resistor values of R1 and R2 are equal and can be set the same as R1 in scheme 1.

3.3.4 Scheme 2 PSL

The PSL for this scheme (Figure 22) is practically the same as that of scheme 1. The main difference being that both opto inputs must be off before a trip circuit fail alarm is given.

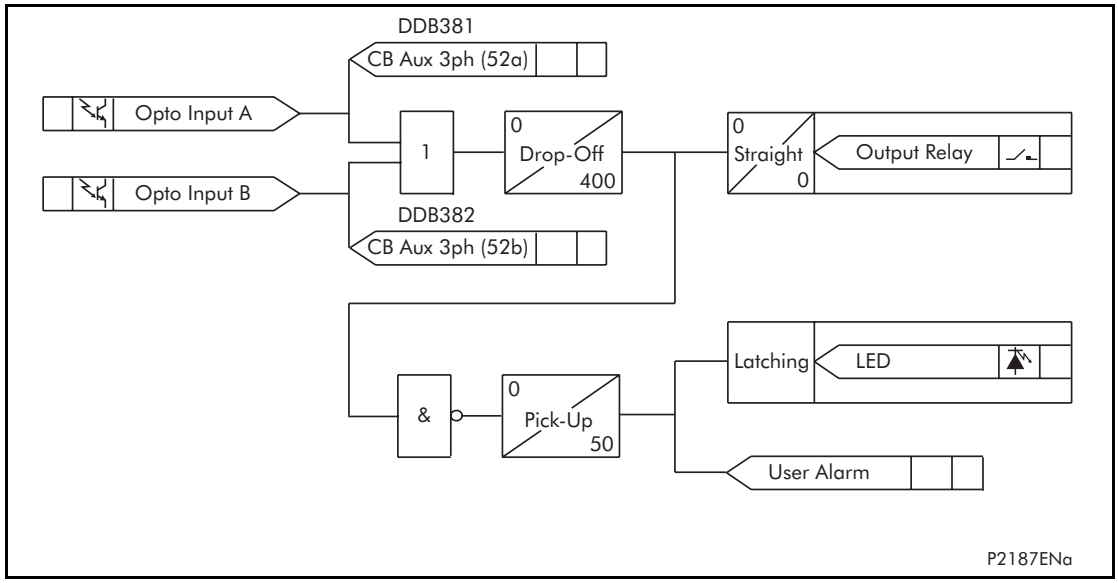

Figure 21: PSL for TCS scheme 2

3.3.5 TCS scheme 3

3.3.5.1 Scheme description

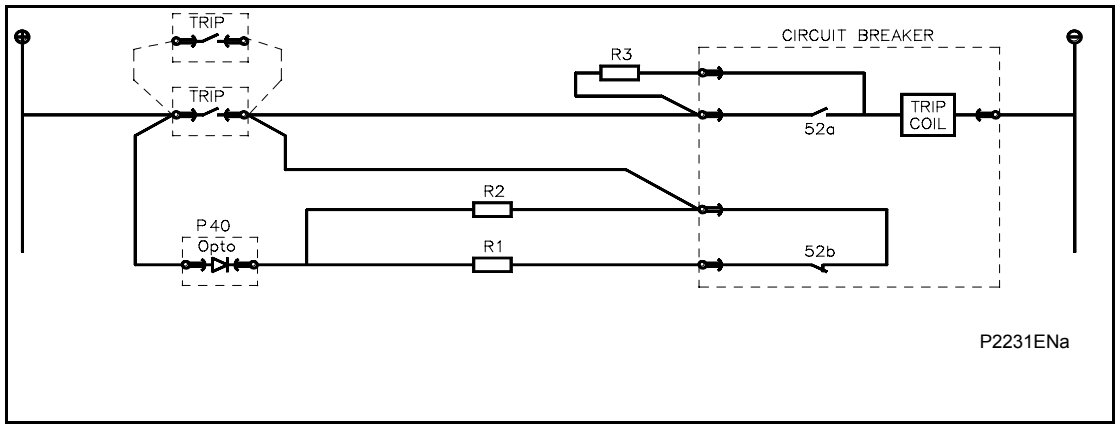

Figure 22: TCS scheme 2

AP

Scheme 3 is designed to provide supervision of the trip coil with the breaker open or closed, but unlike schemes 1 and 2, it also provides pre-closing supervision. Since only one opto input is used, this scheme is not compatible with latched trip contacts. If circuit breaker status monitoring is required a further 1 or 2 opto inputs must be used.

When the breaker is closed, supervision current passes through the opto input, resistor R2 and the trip coil. When the breaker is open current flows through the opto input, resistors R1 and R2 (in parallel), resistor R3 and the trip coil. Unlike schemes 1 and 2, supervision current is maintained through the trip path with the breaker in either state, therefore giving pre-closing supervision.

As with schemes 1 and 2, resistors R1 and R2 are used to prevent false tripping, if the opto-input is accidentally shorted. However, unlike the other two schemes, this scheme is dependent upon the position and value of these resistors. Removing them would result in incomplete trip circuit monitoring. The table below shows the resistor values and voltage settings required for satisfactory operation.

Auxiliary voltage (Vx)	Resistor R1 & R2 (ohms)	Resistor R3 (ohms)	Opto voltage setting
24/27	-	-	-
30/34	-	-	-
48/54	1.2 k	0.6 k	24/27
110/250	2.5 k	1.2 k	48/54
220/250	5.0 k	2.5 k	110/125

Table 11: Recommended resistor value and opto voltage settings

Note: Scheme 3 is not compatible with auxiliary supply voltages of 30/34 volts and below.

3.3.6 Scheme 3 PSL

The PSL for scheme 3 is identical to that of scheme 1 (see Figure 22).

4 CURRENT TRANSFORMER REQUIREMENTS

The current transformer requirements for each current input will depend on the protection function with which they are related and whether the line current transformers are being shared with other current inputs. Where current transformers are being shared by multiple current inputs, the kneepoint voltage requirements should be calculated for each input and the highest calculated value used.

The CT requirements for the P24x protection functions except the current differential are as shown below. The P243 is the only model which includes differential protection and for this relay the highest calculated value from the general protection and differential protection CT requirements should be used. The differential CT requirements are shown in section 0.

The general current transformer requirements are based on a maximum prospective fault current of 50 times the relay rated current (In) and the relay having an instantaneous setting of 25 times rated current (In). The current transformer requirements are designed to provide operation of all protection elements except the differential protection.

Where the criteria for a specific application are in excess of those detailed above, or the actual lead resistance exceeds the limiting value quoted, the CT requirements may need to be increased according to the formulae in sections 4.2/3/4.

Nominal rating	Nominal output	Accuracy class	Accuracy limited factor	Limiting lead resistance
1 A	2.5 VA	10P	20	1.3 ohms
5 A	7.5 VA	10P	20	0.11 ohms

Table 12: The CT requirements for the P24x protection functions excluding differential protection

4.1 Motor differential function (P243)

4.1.1 Biased differential protection

The kneepoint voltage requirements for the current transformers used for the current inputs of the motor differential function based on settings of Is1 = 0.05 In, k1 = 0%, Is2 = 1.2 In, k2 = 150%, and with a boundary condition of starting current ≤ 10In, are:

Where the motor is not earthed or resistance earthed at the motor neutral point then the CT knee point voltage requirements are:

$$V_k \geq 30 I_n (R_{ct} + R_L + R_r) \text{ with a minimum of } \frac{60}{In}$$

Where the motor is solidly earthed at the motor neutral point then the CT knee point voltage requirements are:

$$V_k \geq 40 I_n (R_{ct} + 2R_L + R_r) \text{ with a minimum of } \frac{60}{In}$$

Where

V_k = Minimum current transformer kneepoint voltage for through fault stability.

I_n = Relay rated current.

R_{ct} = Resistance of current transformer secondary winding (Ω).

R_L = Resistance of a single lead from relay to current transformer (Ω).

R_r = Resistance of any other protective relays sharing the current transformer (Ω).

For Class-X current transformers, the excitation current at the calculated kneepoint voltage requirement should be less than 2.5In (<5% of the maximum perspective fault current 50 In, on which these CT requirements are based). For IEC standard protection class current transformers, it should be ensured that class 5P are used.

High impedance differential protection

If the motor differential protection function is to be used to implement high impedance differential protection, then the current transformer requirements will be as follows:

Rs = [1.5 x (If) * (RCT + 2RL)] /IS1

$V_K \geq$ 2 x Is1 * Rs

Where

Rs = Value of stabilizing resistor (ohms)

If = Maximum starting current (amps)

V_K = CT knee point voltage (volts)

I_{S1} = Current setting of differential element (amps)

R_{CT} = Resistance of current transformer secondary winding (ohms)

R_L = Resistance of a single lead from relay to current transformer (ohms)

4.2 Non-directional definite time/IDMT short circuit and definite time/IDMT derived earth fault protection

AP

4.2.1 Definite time/IDMT delayed short circuit elements

$V_K \geq$ Icp/2 x (R_{CT} + R_L + R_{rp})

4.2.2 Definite time delayed/IDMT derived earth fault elements

VK ≥ Icn/2 x (R_{CT} + 2_{RL} + R_{rp} + R_{rn})

4.3 Non-directional instantaneous short circuit and derived earth fault protection

4.3.1 Instantaneous short circuit elements

VK ≥ Isp x (R_{CT} + R_L + R_{rp})

4.3.2 Instantaneous derived earth fault elements

VK ≥ Isn x (R_{CT} + 2R_L + R_{rp} + R_{rn})

4.4 Directional definite time/IDMT derived earth fault protection

4.4.1 Directional time delayed derived earth fault protection

VK ≥ Icn/2 x (R_{CT} + 2_{RL} + R_{rp} + R_{rn})

4.4.2 Directional instantaneous derived earth fault protection

VK ≥ Ifn/2 x (R_{CT} + 2R_L + R_{rp} + R_{rn})

4.5 Non-directional/directional definite time/IDMT sensitive earth fault (SEF) protection

4.5.1 Non-directional time delayed SEF protection (residually connected)

VK ≥ Icn/2 x (R_{CT} + 2R_L + R_{rp} + R_{rn})

4.5.2 Non-directional instantaneous SEF protection (residually connected)

VK ≥ Isn/2 x (R_{CT} + 2R_L + R_{rp} + R_{rn})

4.5.3 Directional time delayed SEF protection (residually connected)

$VK \geq Icn/2 \times (R_{CT} + 2R_L + R_{rp} + R_{rn})$

4.5.4 Directional instantaneous SEF protection (residually connected)

$VK \geq Ifn/2 \times (R_{CT} + 2R_L + R_{rp} + R_{rn})$

4.5.5 SEF protection - as fed from a core-balance CT

Core balance current transformers of metering class accuracy are required and should have a limiting secondary voltage satisfying the formulae given below:

Directional non-directional time delayed element:

$VK \geq Icn/2 \times (R_{CT} + 2R_L + R_{rn})$

Directional instantaneous element:

$VK \geq Ifn/2 \times (R_{CT} + 2R_L + R_{rn})$

Non-directional instantaneous element

$VK \geq Isn/2 \times (R_{CT} + 2R_L + R_{rn})$

Note: In addition, it should be ensured that the phase error of the applied core balance current transformer is less than 90 minutes at 10% of rated current and less than 150 minutes at 1% of rated current.

Abbreviations used in the previous formulae are explained below:

Where

V_K = Required CT knee-point voltage (volts)

Ifn = Maximum prospective secondary earth fault current (amps)

Ifp = Maximum prospective secondary phase fault current (amps)

Icn = Maximum prospective secondary earth fault current or 31 times I> setting (whichever is lower) (amps)

Icp = Maximum prospective secondary phase fault current or 31 times I> setting (whichever is lower) (amps)

Isn = Stage 2 Earth Fault setting (amps)

Isp = Stage 2 setting (amps)

RCT = Resistance of current transformer secondary winding (ohms)

RL = Resistance of a single lead from relay to current transformer (ohms)

Rrp = Impedance of relay phase current input at 30In (ohms)

Rrn = Impedance of the relay neutral current input at 30In (ohms)

4.6 Converting an IEC185 current transformer standard protection classification to a kneepoint voltage

The suitability of an IEC standard protection class current transformer can be checked against the kneepoint voltage requirements specified previously.

If, for example, the available current transformers have a 15 VA 5P 10 designation, then an estimated kneepoint voltage can be obtained as follows:

$$V_k = \frac{VA \times ALF}{In} + ALF \times I_n \times R_{ct}$$

AP

Where:

V_k = Required kneepoint voltage

VA = Current transformer rated burden (VA)

ALF = Accuracy limit factor

I_n = Current transformer secondary rated current (A)

R_{ct} = Resistance of current transformer secondary winding (Ω)

If Rct is not available, then the second term in the above equation can be ignored.

Example: 400/5A, 15VA 5P 10, Rct = 0.2Ω

$$V_k = \frac{15 \times 10}{5} + 10 \times 5 \times 0.2$$

$$= 40 \text{ V}$$

4.7 Converting IEC185 current transformer standard protection classification to an ANSI/IEEE standard voltage rating

MiCOM Px40 series protection is compatible with ANSI/IEEE current transformers as specified in the IEEE C57.13 standard. The applicable class for protection is class "C", which specifies a non air-gapped core. The CT design is identical to IEC class P, or British Standard class X, but the rating is specified differently.

AP

The ANSI/IEEE “C” Class standard voltage rating required will be lower than an IEC knee point voltage. This is because the ANSI/IEEE voltage rating is defined in terms of useful output voltage at the terminals of the CT, whereas the IEC knee point voltage includes the voltage drop across the internal resistance of the CT secondary winding added to the useful output. The IEC/BS knee point is also typically 5% higher than the ANSI/IEEE knee point.

Therefore:

Vc = [Vk .- Internal voltage drop] / 1.05

= [Vk - (In . RCT . ALF)] / 1.05

Where:

Vc = “C” Class standard voltage rating

Vk = IEC Knee point voltage required

In = CT rated current = 5 A in USA

RCT = CT secondary winding resistance

(for 5 A CTs, the typical resistance is 0.002 ohms/secondary turn)

ALF CT = The CT accuracy limit factor, the rated dynamic current output of a "C" class (Kssc) is always 20 x In

The IEC accuracy limit factor is identical to the 20 times secondary current ANSI/IEEE rating.

Therefore:

Vc = [Vk - (100 . RCT)] / 1.05

5 READ ONLY MODE

With IEC 61850 and Ethernet / Internet communication capabilities, security has become a pressing issue. The Px40 relay provides a facility to allow the user to enable or disable the change in configuration remotely.

Read Only mode can be enabled/disabled for the following rear ports:

- Rear Port 1 – IEC 60870-5-103 and Courier protocols
- Rear Port 2 (if fitted) – Courier protocol
- Ethernet Port (if fitted) – Courier protocol (“tunnelled”)

6 AUXILIARY SUPPLY FUSE RATING

In the Safety section of this manual, the maximum allowable fuse rating of 16 A is quoted. To allow time grading with fuses upstream, a lower fuselink current rating is often preferable. Use of standard ratings of between 6 A and 16 A is recommended. Low voltage fuselinks, rated at 250 V minimum and compliant with IEC 60269-2 general application type gG are acceptable, with high rupturing capacity. This gives equivalent characteristics to HRC "red spot" fuses type NIT/TIA often specified historically.

The table below recommends advisory limits on relays connected per fused spur. This applies to MiCOM Px40 series devices with hardware suffix C and higher, as these have inrush current limitation on switch-on, to conserve the fuse-link.

Maximum number of MiCOM Px40 relays recommended per fuse				
Battery nominal voltage	6 A	10 A fuse	15 or 16 A fuse	Fuse rating > 16 A
24 to 54 V	2	4	6	Not permitted
60 to 125 V	4	8	12	Not permitted
138 to 250 V	6	10	16	Not permitted

Table 13: Auxiliary supplies and the corresponding fuse ratings

Alternatively, miniature circuit breakers (MCB) may be used to protect the auxiliary supply circuits.

PROGRAMMABLE LOGIC

PL

Date:	**24th November 2009**
Hardware suffix:	**J (P241) K (P242/3)**
Software version:	**57**
Connection diagrams:	**10P241xx (xx = 01 to 02)** **10P242xx (xx = 01 to 01)** **10P243xx (xx = 01 to 01)**

PL

CONTENTS

1	**PROGRAMMABLE LOGIC**	**5**
1.1	**Overview**	**5**
1.2	**MiCOM S1 Studio Px40 PSL editor**	**5**
1.3	**How to use MiCOM Px40 PSL editor**	**6**
1.4	**Warnings**	**6**
1.5	**Toolbar and commands**	**6**
1.5.1	Standard tools	6
1.5.2	Alignment tools	6
1.5.3	Drawing tools	7
1.5.4	Nudge tools	7
1.5.5	Rotation tools	7
1.5.6	Structure tools	7
1.5.7	Zoom and pan tools	7
1.5.8	Logic symbols	7
1.6	**PSL logic signals properties**	**8**
1.6.1	Link properties	9
1.6.2	Opto signal properties	9
1.6.3	Input signal properties	9
1.6.4	Output signal properties	9
1.6.5	GOOSE input signal properties	10
1.6.6	GOOSE output signal properties	10
1.6.7	Control input signal properties	10
1.6.8	Function key properties (P242/3 only)	10
1.6.9	Fault recorder trigger properties	11
1.6.10	LED signal properties	11
1.6.11	Contact signal properties	11
1.6.12	LED conditioner properties	11
1.6.12.1	Tri-color LED conditioner (P242/3)	11
1.6.12.2	Red LED conditioner (P241)	12
1.6.13	Contact conditioner properties	12
1.6.14	Timer properties	12
1.6.15	Gate properties	13
1.7	**Description of logic nodes**	**13**
1.8	**Factory default programmable scheme logic**	**21**
1.9	**Logic input mapping**	**21**
1.10	**Relay output contact mapping**	**22**
1.11	**Programmable LED output mapping**	**22**
1.12	**Fault recorder start mapping**	**23**

2 MICOM P24X PROGRAMMABLE SCHEME LOGIC 24

FIGURES

Figure 1: Tri-color LED conditioning (P242/3) 11
Figure 2: P241 Opto Input Mappings 24
Figure 3: P241 Output Relay Mappings 25
Figure 4: P241 LED Mappings 26
Figure 5: Fault Recorder Trigger Mapping 27
Figure 6: P242/3 Opto Input Mappings 27
Figure 7: P242/3 Output Relay Mappings 28
Figure 8: P242/3 LED Mappings 29
Figure 9: Fault Recorder Trigger Mapping 30
Figure 10: Function Key Mapping 30

TABLES

Table 1: Description of available logic nodes 20
Table 2: Default settings 21
Table 3: P241 opto inputs default mappings 21
Table 4: P242/3 opto inputs default mappings 21
Table 5: P241 relay output contacts default mappings 22
Table 6: P242/3 relay output contacts default mappings 22
Table 7: P241 programmable LED default mappings 23
Table 8: P242/3 programmable LED default mappings 23
Table 9: Default fault record initiation 23

1 PROGRAMMABLE LOGIC

1.1 Overview

The purpose of the programmable scheme logic (PSL) is to allow the relay user to configure an individual protection scheme to suit their own particular application. This is achieved through the use of programmable logic gates and delay timers.

The input to the PSL is any combination of the status of opto inputs. It is also used to assign the mapping of functions to the opto inputs and output contacts, the outputs of the protection elements, e.g. protection starts and trips, and the outputs of the fixed protection scheme logic. The fixed scheme logic provides the relay's standard protection schemes. The PSL itself consists of software logic gates and timers. The logic gates can be programmed to perform a range of different logic functions and can accept any number of inputs. The timers are used either to create a programmable delay, and/or to condition the logic outputs, e.g. to create a pulse of fixed duration on the output regardless of the length of the pulse on the input. The outputs of the PSL are the LEDs on the front panel of the relay and the output contacts at the rear.

The execution of the PSL logic is event driven; the logic is processed whenever any of its inputs change, for example as a result of a change in one of the digital input signals or a trip output from a protection element. Also, only the part of the PSL logic that is affected by the particular input change that has occurred is processed. This reduces the amount of processing time that is used by the PSL; even with large, complex PSL schemes the relay trip time will not lengthen.

This system provides flexibility for the user to create their own scheme logic design. However, it also means that the PSL can be configured into a very complex system; hence setting of the PSL is implemented through the PC support package MiCOM S1 Studio.

1.2 MiCOM S1 Studio Px40 PSL editor

To access the Px40 PSL Editor menu click on

The PSL Editor module enables you to connect to any MiCOM device front port, retrieve and edit its Programmable Scheme Logic files and send the modified file back to a MiCOM Px40 device.

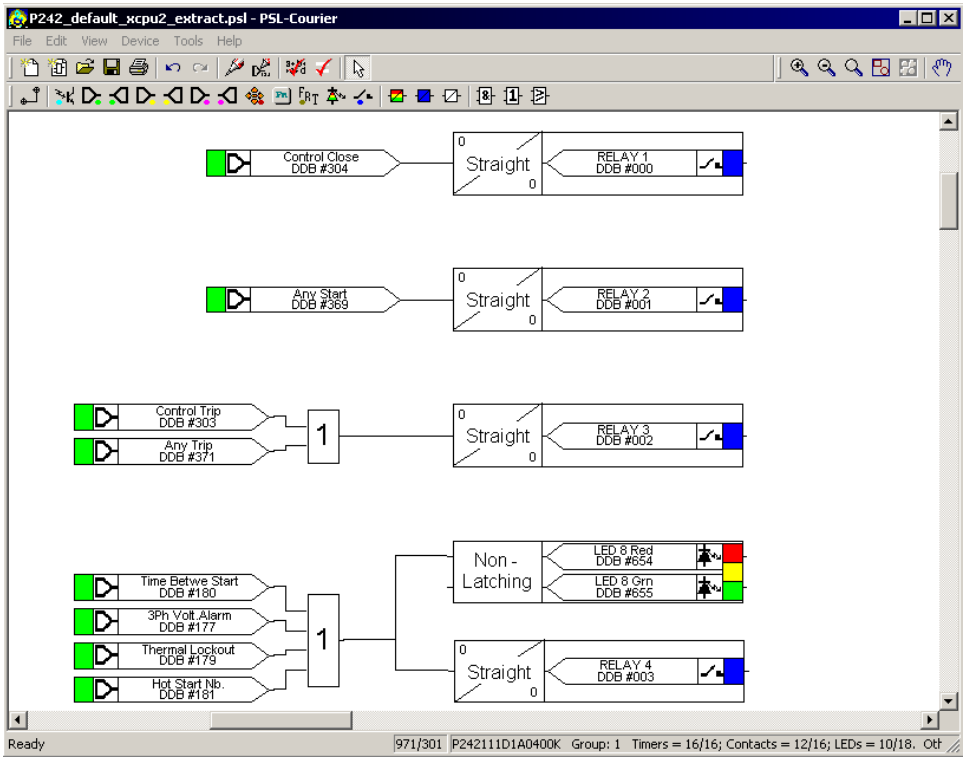

PL

1.3 How to use MiCOM Px40 PSL editor

With the MiCOM Px40 PSL Module you can:

- Start a new PSL diagram
- Extract a PSL file from a MiCOM Px40 IED
- Open a diagram from a PSL file
- Add logic components to a PSL file
- Move components in a PSL file
- Edit link of a PSL file
- Add link to a PSL file
- Highlight path in a PSL file
- Use a conditioner output to control logic
- Download PSL file to a MiCOM Px40 IED
- Print PSL files

For a detailed discussion on how to use these functions, please refer to MiCOM S1 Studio Users Manual.

1.4 Warnings

Checks are done before the scheme is sent to the relay. Various warning messages may be displayed as a result of these checks.

The Editor first reads in the model number of the connected relay, and then compares it with the stored model number. A "wildcard" comparison is employed. If a model mismatch occurs then a warning will be generated before sending commences. Both the stored model number and that read-in from the relay are displayed along with the warning; the onus is on you to decide if the settings to be sent are compatible with the connected relay. Wrongly ignoring the warning could lead to undesired behavior in the relay.

If there are any potential problems of an obvious nature then a list will be generated. The types of potential problems that the program attempts to detect are:

- One or more gates, LED signals, contact signals, and/or timers have their outputs linked directly back to their inputs. An erroneous link of this sort could lock up the relay, or cause other more subtle problems to arise.
- Inputs To Trigger (ITT) exceeds the number of inputs. A programmable gate has its ITT value set to greater than the number of actual inputs; the gate can never activate. Note that there is no lower ITT value check. A 0-value does not generate a warning.
- Too many gates. There is a theoretical upper limit of 256 gates in a scheme, but the practical limit is determined by the complexity of the logic. In practice the scheme would have to be very complex, and this error is unlikely to occur.
- Too many links. There is no fixed upper limit to the number of links in a scheme. However, as with the maximum number of gates, the practical limit is determined by the complexity of the logic. In practice the scheme would have to be very complex, and this error is unlikely to occur.

1.5 Toolbar and commands

There are a number of toolbars available for easy navigation and editing of PSL.

1.5.1 Standard tools

For file management and printing.

1.5.2 Alignment tools

To snap logic elements into horizontally or vertically aligned groupings.

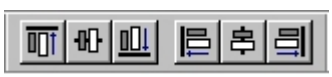

1.5.3 Drawing tools

To add text comments and other annotations, for easier reading of PSL schemes.

1.5.4 Nudge tools

To move logic elements.

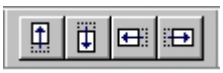

1.5.5 Rotation tools

Tools to spin, mirror and flip.

1.5.6 Structure tools

To change the stacking order of logic components.

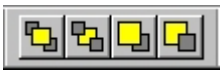

1.5.7 Zoom and pan tools

For scaling the displayed screen size, viewing the entire PSL, or zooming to a selection.

1.5.8 Logic symbols

P242/3 logic symbols

P241 logic symbols

This toolbar provides icons to place each type of logic element into the scheme diagram. Not all elements are available in all devices. Icons will only be displayed for those elements available in the selected device.

Link

Create a link between two logic symbols.

Opto Signal

Create an opto signal.

Input Signal

Create an input signal.

Output Signal

Create an output signal.

GOOSE In

Create an input signal to logic to receive an IEC 61850 GOOSE message transmitted from another IED.

GOOSE Out

Create an output signal from logic to transmit an IEC 61850 GOOSE message to another IED.

PL

Control In
Create an input signal to logic that can be operated from an external command.

Function Key
Create a function key input signal.

Trigger Signal
Create a fault record trigger.

LED Signal
Create an LED input signal that repeats the status of tri-color LED.

(P242/3)

Create an LED input signal that repeats the status of red LED.

(P241)

Contact Signal
Create a contact signal.

LED Conditioner
Create an LED conditioner for tri-color LED (P242/3)

Create an LED conditioner for red LED (P241)

Contact Conditioner
Create a contact conditioner.

Timer
Create a timer.

AND Gate
Create an AND Gate.

OR Gate
Create an OR Gate.

Programmable Gate
Create a programmable gate.

SR Programmable Gate
Create a programmable SR gate.

1.6 PSL logic signals properties

The logic signal toolbar is used for the selection of logic signals.

Performing a right-mouse click on any logic signal will open a context sensitive menu and one of the options for certain logic elements is the **Properties** command. Selecting the Properties option will open a Component Properties window, the format of which will vary according to the logic signal selected.

Properties of each logic signal, including the Component Properties windows, are shown in the following sub-sections:

Signal properties menu

The **Signals List** tab is used for the selection of logic signals.

The signals listed will be appropriate to the type of logic symbol being added to the diagram. They will be of one of the following types:

1.6.1 Link properties

Links form the logical link between the output of a signal, gate or condition and the input to any element.

Any link that is connected to the input of a gate can be inverted via its properties window. An inverted link is indicated with a “bubble” on the input to the gate. It is not possible to invert a link that is not connected to the input of a gate.

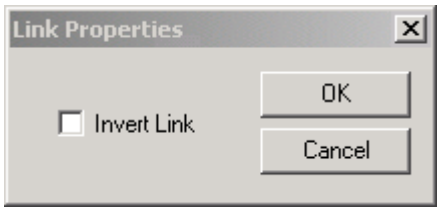

Links can only be started from the output of a signal, gate, or conditioner, and can only be ended on an input to any element.

Since signals can only be either an input or an output then the concept is somewhat different. In order to follow the convention adopted for gates and conditioners, input signals are connected from the left and output signals to the right. The Editor will automatically enforce this convention.

A link attempt will be refused where one or more rules would otherwise be broken. A link will be refused for the following reasons:

An attempt to connect to a signal that is already driven. The cause of the refusal may not be obvious, since the signal symbol may appear elsewhere in the diagram. Use “Highlight a Path” to find the other signal.

An attempt is made to repeat a link between two symbols. The cause of the refusal may not be obvious, since the existing link may be represented elsewhere in the diagram.

PL

1.6.2 Opto signal properties

Opto Signal

Each opto input can be selected and used for programming in PSL. Activation of the opto input will drive an associated DDB signal.

For example activating opto input L1 will assert DDB 064 in the PSL.

1.6.3 Input signal properties

Input Signal

Relay logic functions provide logic output signals that can be used for programming in PSL. Depending on the relay functionality, operation of an active relay function will drive an associated DDB signal in PSL.

For example DDB 298 will be asserted in the PSL on a successful motor start.

1.6.4 Output signal properties

Output Signal

Relay logic functions provide logic input signals that can be used for programming in PSL. Depending on the relay functionality, activation of the output signal will drive an associated DDB signal in PSL and cause an associated response to the relay function.

For example, if DDB 108 is asserted in the PSL, an emergency start of the motor will be initiated.

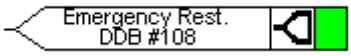

1.6.5 GOOSE input signal properties

GOOSE In

The Programmable Scheme Logic interfaces with the GOOSE Scheme Logic (see S1 Studio user's manual) by means of 32 Virtual inputs. The Virtual Inputs can be used in much the same way as the Opto Input signals.

The logic that drives each of the Virtual Inputs is contained within the relay's GOOSE Scheme Logic file. It is possible to map any number of bit-pairs, from any enrolled device, using logic gates onto a Virtual Input (see S1 Studio Users manual for more details).

For example DDB 544 will be asserted in PSL should virtual input 1 and its associated bit pair operate.

1.6.6 GOOSE output signal properties

GOOSE Out

The Programmable Scheme Logic interfaces with the GOOSE Scheme Logic by means of 32 Virtual outputs.

It is possible to map virtual outputs to bit-pairs for transmitting to any enrolled devices (see S1 Users manual for more details).

For example if DDB 512 is asserted in PSL, Virtual Output 1 and its associated bit-pair mappings will operate.

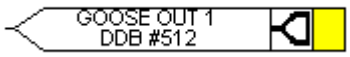

1.6.7 Control input signal properties

Control Inputs

There are 32 control inputs which can be activated via the relay menu, 'hotkeys' or via rear communications. Depending on the programmed setting i.e. latched or pulsed, an associated DDB signal will be activated in PSL when a control input is operated.

For example operate control input 1 to assert DDB 608 in the PSL.

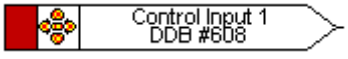

1.6.8 Function key properties (P242/3 only)

Function Key

Each function key can be selected and used for programming in PSL. Activation of the function key will drive an associated DDB signal and the DDB signal will remain active depending on the programmed setting i.e. toggled or normal. Toggled mode means the DDB signal will remain latched or unlatched on key press and normal means the DDB will only be active for the duration of the key press.

For example operate function key 1 to assert DDB 676 in the PSL.

PL

1.6.9 Fault recorder trigger properties

Fault Record Trigger

The fault recording facility can be activated, by driving the fault recorder trigger DDB signal.

For example assert DDB 468 to activate the fault recording in the PSL.

1.6.10 LED signal properties

LED

All programmable LEDs will drive associated DDB signal when the LED is activated.

For example DDB 652 will be asserted when tri-color LED 7 is activated (P242/3) and DDB 102 for red LED 7 (P241).

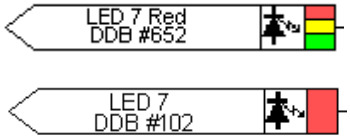

1.6.11 Contact signal properties

Contact Signal

All relay output contacts will drive associated DDB signal when the output contact is activated.

For example DDB 000 will be asserted when output R1 is activated.

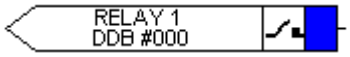

1.6.12 LED conditioner properties

1.6.12.1 Tri-color LED conditioner (P242/3)

1. Select the LED name from the list (only shown when inserting a new symbol).
2. Configure the LED output to be Red, Yellow or Green.
3. Configure a Green LED by driving the Green DDB input.
4. Configure a RED LED by driving the RED DDB input.
5. Configure a Yellow LED by driving the RED and GREEN DDB inputs simultaneously.

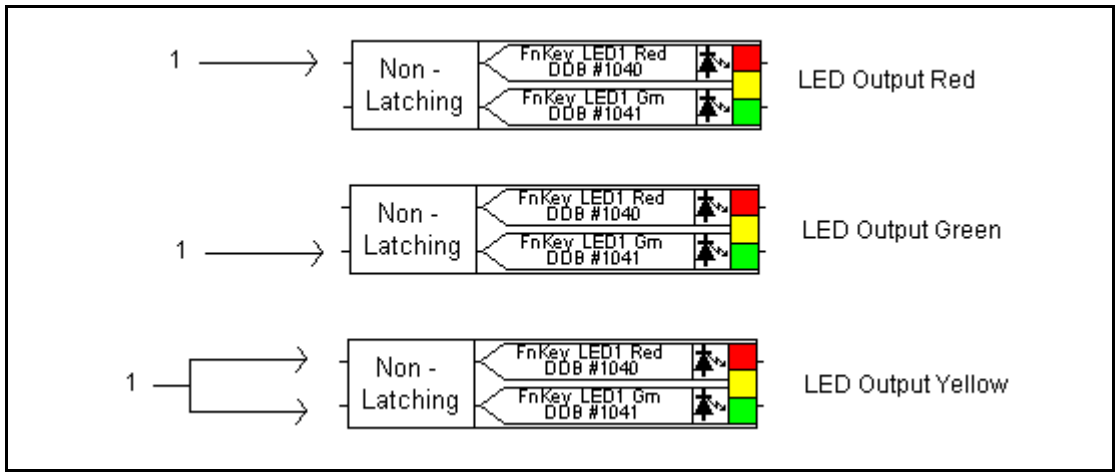

Figure 1: Tri-color LED conditioning (P242/3)

6. Configure the LED output to be latching or non-latching.

PL

1.6.12.2 Red LED conditioner (P241)

1. Select the LED name from the list (only shown when inserting a new symbol).
2. Configure the LED output to be latching or non-latching

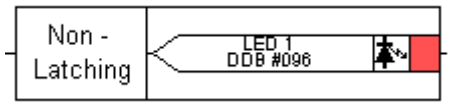

1.6.13 Contact conditioner properties

Each contact can be conditioned with an associated timer that can be selected for pick up, drop off, dwell, pulse, pick-up/drop-off, straight-through, or latching operation.

"Straight-through" means it is not conditioned in any way whereas "latching" is used to create a sealed-in or lockout type function.

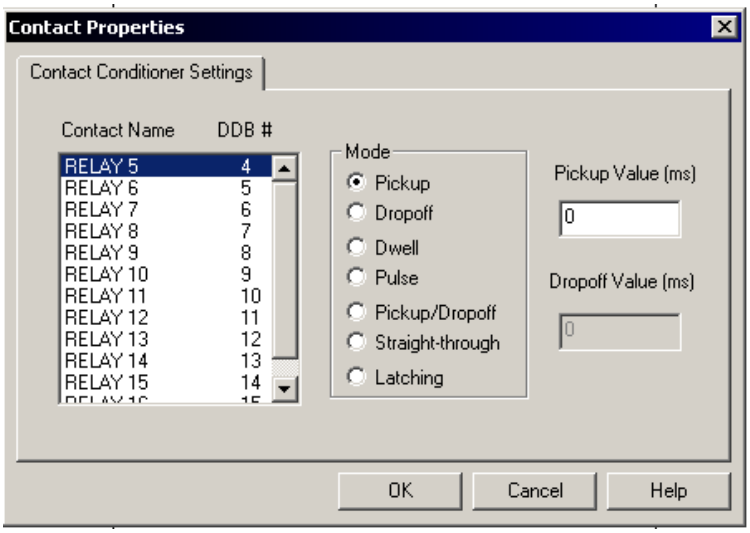

1. Select the contact name from the Contact Name list (only shown when inserting a new symbol).
2. Choose the conditioner type required in the Mode tick list.
3. Set the Pick-up Time (in milliseconds), if required.
4. Set the Drop-off Time (in milliseconds), if required.

1.6.14 Timer properties

Each timer can be selected for pick up, drop off, dwell, pulse or pick-up/drop-off operation.

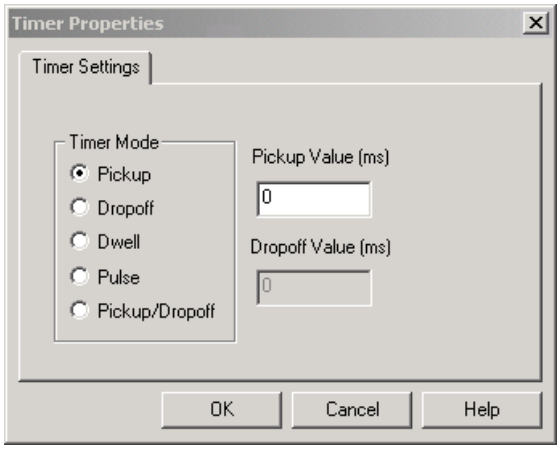

1. Choose the operation mode from the Timer Mode tick list.
2. Set the Pick-up Time (in milliseconds), if required.
3. Set the Drop-off Time (in milliseconds), if required.

PL

1.6.15 Gate properties

A Gate may be an AND, OR, or programmable gate.

An AND gate requires that all inputs are TRUE for the output to be TRUE.

An OR gate requires that one or more input is TRUE for the output to be TRUE.

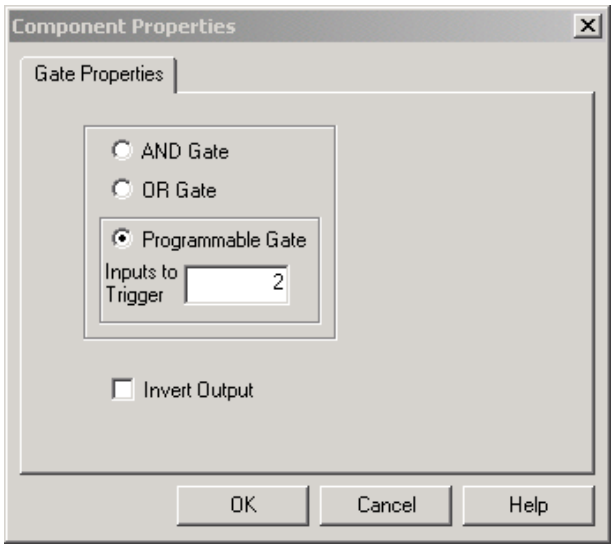

A Programmable gate requires that the number of inputs that are TRUE is equal to or greater than its 'Inputs to Trigger' setting for the output to be TRUE.

1. Select the Gate type AND, OR, or Programmable.
2. Set the number of inputs to trigger when Programmable is selected.
3. Select if the output of the gate should be inverted using the Invert Output check box. An inverted output is indicated with a "bubble" on the gate output.

PL

1.7 Description of logic nodes

DDB no.	English text	Source	Description
0	Relay 1 (Output Label Setting)	Relay conditioner	Relay 1 is on
6	Relay 7 (Output Label Setting)	Relay conditioner	Relay 7 is on
15	Relay 16 (Output Label Setting)	Relay conditioner	Relay 16 is on (P242/3 only)
16 to 63	Not Used		
64	Opto 1 (Input Label Setting)	Opto Isolator Input	Opto 1 is on
71	Opto 8 (Input Label Setting)	Opto Isolator Input	Opto 8 is on
79	Opto 16 (Input Setting)	Opto Isolator Input	Opto 16 is on (P242/3 only)
96	LED1 Red	PSL	LED 1 Red is on (P241 only)
103	LED8 Red.	PSL	LED 8 Red is on (P241 only)
104	Speed Input	PSL	Speed Switch input is on
105	CB Aux 3Ph - 52A	PSL	CB1 Closed
106	CB Aux 3Ph - 52B	PSL	CB1 Open
107	Setting Group.	PSL	Setting Group change (Off = Group1, On = Group 2)
108	Emergency Rest.	PSL	Initiates Emergency Restart of motor
109	Reset Thermal	PSL	Resets Thermal State to 0%

DDB no.	English text	Source	Description
110	Dist Rec Trig	PSL	Triggers the Disturbance Recorder
111	Close	PSL	Initiates a breaker close command
112	Trip	PSL	Initiates a breaker trip command
113	Reset Latches	PSL	Reset all latched LEDs and output relays
114	Test Mode	PSL	Commissioning Tests - automatically places relay in Test Mode which takes the relay out of service and allows secondary injection testing of the relay. For IEC 60870-5-103 protocol spontaneous events and cyclic measured data transmitted whilst the relay is in test mode will have a COT of 'test mode'
115	External Trip	PSL	External Trip 3 phase - allows external protection to initiate breaker fail and circuit breaker condition monitoring counters.
116	Time Synch	PSL	Time Synchronism by opto Input pulse
117	FFail Block	PSL	Blocks operation of the Field Failure protection
118	Trip LED	PSL	Signal to switch on the Trip LED
119	Monitor Blocking DDB	PSL	Monitor Blocking DDB
120	Command Blocking DDB	PSL	Command Blocking DDB
121	RP1 Read Only DDB	PSL	Rear communications Port 1 read only mode selection
122	RP2 Read Only DDB	PSL	Rear communications Port 1 read only mode selection
123	NIC Read Only DDB	PSL	Rear Ethernet communications port read only mode selection
124 to 173	Not Used		
174	General Alarm		Any Alarm is operated
175	Prot'n Disabled	Commissioning Test	Protection Disabled - typically out of service due to test mode
176	F Out of Range	Frequency Tracking	Frequency Out of bandwidth Range (45-60 Hz)
177	3Ph Volt Alarm	Rev Ph Seq	Phase rotation is incorrect (V2>V1) or phase voltages are below Start Voltage threshold
178	Thermal Alarm	Thermal Overload	Thermal State has exceeded alarm threshold
179	Thermal Lockout	Thermal Overload	Used to inhibit a motor start until Thermal State < Thermal Lockout threshold
180	Time Betwe Start	Start Protection	Used to inhibit a motor start for the Time Between Starts setting following a trip
181	Hot Start Nb	Start Protection	Used to inhibit a motor start if Number of Hot Starts setting is exceeded
182	Cold Start Nb	Start Protection	Used to inhibit a motor start if Number of Cold Starts setting is exceeded
183	Man CB Trip Fail	CB Control	Circuit Breaker Failed to Trip (after a manual/operator trip command)
184	Man CB Cls Fail	CB Control	Circuit Breaker Failed to Close (after a manual/operator close command)
185	CB Status Alarm	CB Status	Indication of a fault with the Circuit Breaker state monitoring – example: defective auxiliary contacts
186	I^ Maint Alarm	CB Monitoring	Circuit Breaker cumulative broken current has exceeded the maintenance alarm setting.

PL

DDB no.	English text	Source	Description
187	CB Ops Maint	CB Monitoring	Number of Circuit Breaker trips has exceeded maintenance alarm setting.
188	CB OP Time Maint	CB Monitoring	Circuit Breaker operating time has exceeded maintenance alarm setting (slow interruption time)
189	3 Ph W Alarm	Measurement setup	3 Phase Watts Alarm
190	3 Ph Var Alarm	Measurement setup	3 Phase Var Alarm
191	RTD 1 Alarm	RTD Protection	RTD 1 Alarm
200	RTD 10 Alarm	RTD Protection	RTD 10 Alarm
201	RTD Short Cct	RTD Protection	RTD Short Circuit circuit (the RTD Short Cct cell in Measurements 3 indicates which RTD is open circuit)
202	RTD Open Cct	RTD Protection	RTD Open Circuit (the RTD Open Cct cell in Measurements 3 indicates which RTD is open circuit)
203	RTD Data Error	RTD Protection	RTD Data inconsistency Error (the RTD Data Error cell in Measurements 3 indicates which RTD has a data error)
204	Invalid Set Grp	Group Selection	Invalid Setting Group
205	Dist Rec. Conf	Disturbance Recorder	Disturbance Recorder Configuration is not compliant with "connecting mode", for example if "VT connecting mode" = "2VT+antibackspin"
206	CB Fail Alarm	CB Fail	Circuit Breaker Fail Alarm
207	W Fwd Alarm	Measurement setup	Watt Forward Alarm
208	W Rev Alarm	Measurement setup	Watt Reverse Alarm
209	VAr Fwd Alarm	Measurement setup	Var Forward Alarm
210	VAr Rev Alarm	Measurement setup	Var Reverse Alarm
211	Analo Inp1 Alarm	Current Loop Inputs	Current Loop Input (Transducer input) 1 Alarm
214	Analo Inp4 Alarm	Current Loop Inputs	Current Loop Input (Transducer input) 4 Alarm
215	MR User Alarm 1	PSL	User Alarm 1 (Manual-Resetting)
221	MR User Alarm 7	PSL	User Alarm 7 (Manual-Resetting)
222	SR User Alarm 8	PSL	User Alarm 8 (Self-Resetting)
228	SR User Alarm 14	PSL	User Alarm 14 (Self-Resetting)
229	CT-1 Fail Alarm	CT Supervision	CTS Indication Alarm for IA/IB/IC (CT supervision alarm).
230	CT-2 Fail Alarm	CT Supervision	CTS Indication Alarm for IA-2/IB-2/IC-2 (CT supervision alarm). (P243)
223	MR User Alarm 9	PSL	User Alarm 9 (Manual-Resetting)
224	SR User Alarm 10	PSL	User Alarm 10 (Self-Resetting)
230	SR User Alarm 16	PSL	User Alarm 16 (Self-Resetting)
231	Hour Run Alarm 1	Measurement setup	Hour Run Alarm 1
232	Hour Run Alarm 2	Measurement setup	Hour Run Alarm 2
233	Antibkspin Alarm	Anti-Backspin	Anti-Backspin Alarm
234	Field Fail Alarm	Field Failure	Field Failure Alarm
235	Not used		
236	Thermal Trip	Thermal Overload	Thermal State has exceeded trip threshold
237	Trip I>1	Short Circuit	1st stage Short Circuit Trip, 3-phase
238	I>1 A Phase	Short Circuit	As per DDB#242
239	I>1 B Phase	Short Circuit	As per DDB#243

DDB no.	English text	Source	Description
240	I>1 C Phase	Short Circuit	As per DDB#244
241	Start I>1	Short Circuit	1st stage Short Circuit Start, 3 Phase
242	Start I>1 A Ph	Short Circuit	1st stage Short Circuit Start, A Phase
243	Start I>1 B Ph	Short Circuit	1st stage Short Circuit Start, B Phase
244	Start I>1 C Ph	Short Circuit	1st stage Short Circuit Start, C Phase
245	Trip I>1 A Ph	Short Circuit	1st stage Short Circuit Trip, A Phase
246	Trip I>1 B Ph	Short Circuit	1st stage Short Circuit Trip, B Phase
247	Trip I>1 C Ph	Short Circuit	1st stage Short Circuit Trip, C Phase
248	Trip I>2	Short Circuit	2nd stage Short Circuit Trip, 3 Phase
249	I>2 A Phase	Short Circuit	As per DDB#253
250	I>2 B Phase	Short Circuit	As per DDB#254
251	I>2 C Phase	Short Circuit	As per DDB#255
252	Start I>2	Short Circuit	2nd stage Short Circuit start, 3 Phase
253	Start I>2 A Ph	Short Circuit	2nd stage Short Circuit start, A Phase
254	Start I>2 B Ph	Short Circuit	2nd stage Short Circuit start, B Phase
255	Start I>2 C Ph	Short Circuit	2nd stage Short Circuit start, C Phase
256	Trip I>2 A Ph	Short Circuit	2nd stage Short Circuit trip, A Phase
257	Trip I>2 B Ph	Short Circuit	2nd stage Short Circuit trip, B Phase
258	Trip I>2 C Ph	Short Circuit	2nd stage Short Circuit trip, C Phase
259	Trip F<1	Underfrequency	1st stage Underfreqeuncy Trip
260	Trip F<2	Underfrequency	2nd stage Underfrequency Trip
261	Trip ISEF>1	Earth Fault	1st stage Sensitive Earth Fault Trip
262	Start ISEF>1	Earth Fault	1st stage Sensitive Earth Fault Start
263	Trip ISEF>2	Earth Fault	2nd stage Sensitive Earth Fault Trip
264	Start ISEF>2	Earth Fault	2nd stage Sensitive Earth Fault Start
265	Trip IN>1	Derived Earth Fault	1st stage Derived Earth Fault Trip
266	Start IN>1	Derived Earth Fault	1st stage Derived Earth Fault Start
267	Trip IN>2	Derived Earth Fault	2nd stage Derived Earth Fault Trip
268	Start IN>2	Derived Earth Fault	2nd stage Derived Earth Fault Start
269	Trip P<1	Loss of Load	1st stage Underpower Trip
270	Trip P<2	Loss of Load	2nd stage Underpower Trip
271	Trip PF< Lead	Under Power Factor	Out of Step Trip (leading power factor)
272	Trip PF< Lag	Under Power Factor	Out of Step Trip (lagging power factor)
273	Trip Rev Power	Reverse Power	Reverse Power Trip
274	Trip I2>1	Negative sequence O/C	1st stage NPS Trip
275	Tip I2>2	Negative sequence O/C	2nd stage NPS Trip
276	V<1 AB Phase	Volt Protection	1st stage Undervoltage Trip, AB Phase
277	V<1 BC Phase	Volt Protection	1st stage Undervoltage Trip, BC Phase
278	V<1 CA Phase	Volt Protection	1st stage Undervoltage Trip, CA Phase
279	Trip V<1	Volt Protection	1st stage Undervoltage Trip, 3 Phase
280	V>1 AB Phase	Volt Protection	1st stage Overvoltage Trip, AB Phase
281	V>1 BC Phase	Volt Protection	1st stage Overvoltage Trip, BC Phase
282	V>1 CA Phase	Volt Protection	1st stage Overvoltage Trip, CA Phase
283	Trip V>1	Volt Protection	1st stage Overvoltage Trip, 3 Phase
284	V<2 AB Phase	Volt Protection	2nd stage Undervoltage Trip, AB Phase
285	V<2 BC Phase	Volt Protection	2nd stage Undervoltage Trip, BC Phase

DDB no.	English text	Source	Description
286	V<2 CA Phase	Volt Protection	2nd stage Undervoltage Trip, CA Phase
287	Trip V<2	Volt Protection	2nd stage Undervoltage Trip, 3 Phase
288	V>2 AB Phase	Volt Protection	2nd stage Overvoltage Trip, AB Phase
289	V>2 BC Phase	Volt Protection	2nd stage Overvoltage Trip, BC Phase
290	V>2 CA Phase	Volt Protection	2nd stage Overvoltage Trip, CA Phase
291	Trip V>2	Volt Protection	2nd stage Overvoltage Trip, 3 Phase
292	Trip NVD VN>1	Residual O/V NVD	1st stage Neutral Voltage Displacement/Residual Overvoltage Trip
293	Trip NVD VN>2	Residual O/V NVD	2nd Neutral Voltage Displacement/Residual Overvoltage Trip
294	Trip PO>	Earth Fault	Wattmetric directional Earth Fault Trip
295	Start PO>	Earth Fault	Wattmetric directional Earth Fault Start
296	Reacc Low Volt	Stalling	Voltage has dipped below 'Reacc Low Voltage Setting'
297	Strt in Progress	Stalling	Start in Progress
298	Strt Successful	Stalling	Successful Start
299	Prolonged Start	Stalling	Prolonged Start – stall condition when the motor is starting (current > Starting Current setting for time > Prolonged Start Time)
300	Reac in Progress	Stalling	Reacceleration in Progress
301	Stall Rotor-run	Stalling	Stall Rotor condition when the motor is running
302	Stall Rotor-Strt	Stalling	Stall Rotor condition when the motor is starting (current > Starting Current setting and Speed Input is off for time > Stall Time)
303	Control Trip	CB Control	Manual Trip command
304	Control Close	CB Control	Manual Close command
305	Trip RTD 1	RTD Protection	RTD 1 Trip
314	Trip RTD 10	RTD Protection	RTD 10 Trip
315	Diff Trip A	Differential	Motor Differential Trip, A Phase. (P243)
316	Diff Trip B	Differential	Motor Differential Trip, B Phase. (P243)
317	Diff Trip C	Differential	Motor Differential Trip, C Phase. (P243)
318	Trip Diff	Differential	Motor Differential Trip (P243)
319	Trip CBF 1	CB Fail	CB Fail Timer 1 Trip
320	Trip CBF 2	CB Fail	CB Fail Timer 2 Trip
321	Trip Analog Inp 1	Current Loop Inputs	Current Loop Input (Analog/transducer input) 1 Trip
324	Trip Analog Inp 4	Current Loop Inputs	Current Loop Input (Analog/transducer input) 4 Trip
325	Pwd UI Level 0	System Data	Access Level 0 is enabled for the User Interface (HMI)
326	Pwd UI Level 1	System Data	Access Level 1 is enabled for the User Interface (HMI)
327	Pwd UI Level 2	System Data	Access Level 2 is enabled for the User Interface (HMI)
328	Pwd Front Level 0	System Data	Access Level 0 is enabled for the Front Comms Port
329	Pwd Front Level 1	System Data	Access Level 1 is enabled for the Front Comms Port
330	Pwd Front Level 2	System Data	Access Level 2 is enabled for the Front Comms Port

DDB no.	English text	Source	Description
331	Pwd Rear Level 0	System Data	Access Level 0 is enabled for the Main Rear Comms Port
332	Pwd Rear Level 1	System Data	Access Level 1 is enabled for the Main Rear Comms Port
333	Pwd Rear Level 2	System Data	Access Level 2 is enabled for the Main Rear Comms Port
334	FFail1 Start	Field Failure	1st Stage Field Failure Start
335	FFail2 Start	Field Failure	2nd Stage Field Failure Start
336	FFail1 Trip	Field Failure	1st Stage Field Failure Trip
337	FFail2 Trip	Field Failure	2nd Stage Field Failure Trip
338	Trip I>3	Short Circuit	3rd stage Short Circuit Trip, 3-phase
339	I>3 A Phase	Short Circuit	As per DDB#343
340	I>3 B Phase	Short Circuit	As per DDB#344
341	I>3 C Phase	Short Circuit	As per DDB#345
342	Start I>3	Short Circuit	3rd stage Short Circuit Start, 3 Phase
343	Start I>3 A Ph	Short Circuit	3rd stage Short Circuit Start, A Phase
344	Start I>3 B Ph	Short Circuit	3rd stage Short Circuit Start, B Phase
345	Start I>3 C Ph	Short Circuit	3rd stage Short Circuit Start, C Phase
346	Trip I>3 A Ph	Short Circuit	3rd stage Short Circuit Trip, A Phase
347	Trip I>3 B Ph	Short Circuit	3rd stage Short Circuit Trip, B Phase
348	Trip I>3 C Ph	Short Circuit	3rd stage Short Circuit Trip, C Phase
349	Trip I>4	Short Circuit	4th stage Short Circuit Trip, 3-phase
350	I>4 A Phase	Short Circuit	As per DDB#354
351	I>4 B Phase	Short Circuit	As per DDB#355
352	I>4 C Phase	Short Circuit	As per DDB#356
353	Start I>4	Short Circuit	4th stage Short Circuit Start, 3 Phase
354	Start I>4 A Ph	Short Circuit	4th stage Short Circuit Start, A Phase
355	Start I>4 B Ph	Short Circuit	4th stage Short Circuit Start, B Phase
356	Start I>4 C Ph	Short Circuit	4th stage Short Circuit Start, C Phase
357	Trip I>4 A Ph	Short Circuit	4th stage Short Circuit Trip, A Phase
358	Trip I>4 B Ph	Short Circuit	4th stage Short Circuit Trip, B Phase
359	Trip I>4 C Ph	Short Circuit	4th stage Short Circuit Trip, C Phase
360	CTS-1 Block	CT Supervision	CT Supervision Block for IA/IB/IC (current transformer supervision). CTS-1 Block and CTS-2 Block DDBs can be used to block protection functions.
361	CTS-2 BLOCK	CT Supervision	
362	MCB/VTS	PSL	VT supervision input - signal from external Miniature Circuit Breaker showing MCB tripped
363	VTS Confirmed Block	VT Supervision	VT Supervision Fast Block - blocks elements which would otherwise mal-operate immediately after a fuse failure event occurs
364	VTS Fast Block	VT Supervision	VT Supervision Fast Block - blocks elements which would otherwise mal-operate immediately after a fuse failure event occurs
365 to 368	Not Used		
369	Any Start	All Protection	Any Start
370	Protection Trip	All Protection	Any Protection Trip
371	Any Trip	All Protection	Any Trip

DDB no.	English text	Source	Description
372 to 427	Not Used		
428	LED 1 Con	PSL	Input signal driving LED 1 Red is on (P241 only)
435	LED 8 Con	PSL	Input signal driving LED 8 Red is on (P241 only)
436	Timer in 1	Auxiliary Timer In	Input to Auxiliary Timer 1 is on
451	Timer in 16	Auxiliary Timer In	Input to Auxiliary Timer 16 is on
452	Timer out 1	Auxiliary Timer out	Output from Auxiliary Timer 1 is on
467	Timer out 16	Auxiliary Timer out	Output from Auxiliary Timer 16 is on
468	Fault Recorder Trigger	PSL	Trigger for Fault Recorder
469	Battery Fail	PSL	Front panel miniature Battery Failure - either battery removed from slot, or low voltage.
470	Field Volt Fail	PSL	48 V Field Voltage Fail
471	Comm2 H/W FAIL	Communications	Second Rear Comms port failure
472	Goose IED Absent	Communications	
473	NIC Not Fitted	Communications	
474	NIC No Response	Communications	
475	NIC Fatal Error	Communications	
476	NIC Soft Reload	Communications	
477	Bad TCP/IP Cfg	Communications	
478	Bad OSI Config	Communications	
479	NIC Link Fail	Communications	
480	NIC SW Mis-Match	Communications	
481	IP Addr Conflict	Communications	
482-511	Not Used		
512	Virtual Output 1	PSL	Virtual Output 1 - output allows user to control a binary signal which can be mapped via SCADA protocol output to other devices
543	Virtual Output 32	PSL	Virtual Output 32 - output allows user to control a binary signal which can be mapped via SCADA protocol output to other devices
544	GOOSE VIP 1	GOOSE Input Command	Virtual Input 1 - allows binary signals that are mapped to virtual inputs to interface into PSL
575	GOOSE VIP 32	GOOSE Input Command	Virtual Input 32 - allows binary signals that are mapped to virtual inputs to interface into PSL
576 to 607	Not Used		
608	Control Input 1	Control Input Command	Control Input 1 - for SCADA and menu commands into PSL
639	Control Input 32	Control Input Command	Control Input 32 - for SCADA and menu commands into PSL
640	LED1 Red	PSL	Programmable LED 1 Red is on (P242/3 only)
641	LED1 Grn.	PSL	Programmable LED 1 Green is on (P242/3 only)
654	LED8 Red	PSL	Programmable LED 8 Red is on (P242/3 only)
655	LED8 Grn.	PSL	Programmable LED 8 Green is on (P242/3 only)

DDB no.	English text	Source	Description
656	FnKey LED1 Red	PSL	Programmable Function Key LED 1 Red is on (P242/3 only)
657	FnKey LED1 Grn.	PSL	Programmable Function Key LED 1 Green is on (P242/3 only)
674	FnKey LED10 Red	PSL	Programmable Function Key LED 10 Red is on (P345)
675	FnKey LED10 Grn.	PSL	Programmable Function Key LED 10 Green is on (P242/3 only)
676	Function Key 1	User Control	Function Key 1 is on. In 'Normal' mode it is high on keypress and in 'Toggle' mode remains high/low on single keypress (P242/3 only)
685	Function Key 10	User Control	Function Key 10 is on. In 'Normal' mode it is high on keypress and in 'Toggle' mode remains high/low on single keypress (P242/3 only)
686 to 699	Not Used		
700	Output Con 1	PSL	Input signal driving Relay 1 is on
715	Output Con 16	PSL	Input signal driving Relay 16 is on
716 to 763	Not Used		
764	LED1 Con Red	PSL	Input signal driving LED 1 Red is on (P242/3 only)
765	LED1 Con Green	PSL	Input signal driving LED 1 Green is on. To make LED 1 Yellow DDB 640 and DDB 641 must on at the same time. (P242/3 only))
778	LED8 Con Red	PSL	Input signal driving LED 8 Red is on (P242/3 only)
779	LED8 Con Green	PSL	Input signal driving LED 8 Green is on. To make LED 8 Yellow DDB 778 and DDB 779 must be on at the same time (P242/3 only)
780	FnKey LED1 ConR	PSL	Input signal driving Function Key LED 1 Red is on. This LED is associated with Function Key 1 (P242/3 only)
781	FnKey LED1 ConG	PSL	Input signal driving Function Key LED 1 Green is on. This LED is associated with Function Key 1. To make function key 1 LED yellow, DDB 780 and DDB 781 must be on at the same time (P242/3 only)
798	FnKey LED10 ConR	PSL	Input signal driving Function Key LED 10 Red is on. This LED is associated with Function Key 10 (P242/3 only)
799	FnKey LED10 ConG	PSL	Input signal driving Function Key LED 10 Green is on. This LED is associated with Function Key 10. To make function key LED 10 yellow, DDB 798 and DDB 799 must be on at the same time (P242/3 only)
800 to 922	Not Used		
923	PSL Int 1	PSL	PSL Internal Node
1023	PSL Int 101	PSL	PSL Internal Node
1024	Virtual Input 1	GOOSE Input Command	Virtual Input 1 - allows binary signals that are mapped to virtual inputs to interface into PSL
1087	Virtual Input 64	GOOSE Input Command	Virtual Input 64- allows binary signals that are mapped to virtual inputs to interface into PSL

Table 1: Description of available logic nodes

1.8 Factory default programmable scheme logic

The following section details the default settings of the PSL. .

The P241/2/3 model options are as follows:

Model	Opto inputs	Relay outputs
P241xxxxxxxxxJ	8	7
P242xxxxxxxxxK	16	16
P243xxxxxxxxxK	16	16

Table 2: Default settings

1.9 Logic input mapping

The default mappings for each of the opto-isolated inputs are as shown in the following tables:

Opto-Input number	P241 relay text	Function
1	Input L1	L1 CB Closed 3-Ph (52a), LED #1
2	Input L2	L2 CB Open 3-Ph (52b), LED #2
3	Input L3	L3 Speed Input, LED #3
4	Input L4	L4 Emergency Restart
5	Input L5	L5 Reset Thermal
6	Input L6	L6 Reset Latches
7	Input L7	L7 Close
8	Input L8	L8 Trip

Table 3: P241 opto inputs default mappings

PL

Opto-Input number	P242/3 relay text	Function
1	Input L1	L1 CB Closed 3-Ph (52a), LED #1 (Green)
2	Input L2	L2 CB Open 3-Ph (52b), LED #1 (Red)
3	Input L3	L3 Speed Input, LED #3 (Yellow)
4	Input L4	L4. Not Used
5	Input L5	L5 Not Used
6	Input L6	L6 Not Used
7	Input L7	L7 Not Used
8	Input L8	L8. Not Used
9	Input L9	L9 Not Used
10	Input L10	L10 Not Used
11	Input L11	L11 Not Used
12	Input L12	L12 Not Used
13	Input L13	L13 Not Used
14	Input L14	L14 Not Used
15	Input L15	L15 Not Used
16	Input L16	L16 Not Used

Table 4: P242/3 opto inputs default mappings

1.10 Relay output contact mapping

The default mappings for each of the relay output contacts are as shown in the following table:

Relay contact number	P241 relay text	P241 relay conditioner	Function
1	Output R1	Straight Through	R1 Control Close
2	Output R2	Straight Through	R2 Any Protection Start
3	Output R3	Straight Through	R3 Any Protection Trip, Control Trip
4	Output R4	Straight Through	R4 Start Protection (Number of hot/cold starts, time between starts), Thermal Trip, 3Ph Volt Alarm
5	Output R5	N/A	R5 Not Used
6	Output R6	N/A	R6 Not Used
7	Output R7	N/A	R7 Not Used

Table 5: P241 relay output contacts default mappings

Relay contact number	P242/3 relay text	P242/3 relay conditioner	Function
1	Output R1	Straight Through	R1 Control Close
2	Output R2	Straight Through	R2 Any Protection Start
3	Output R3	Straight Through	R3 Any Protection Trip, Control Trip
4	Output R4	Straight Through	R4 Start Protection (Number of hot/cold starts, time between starts), Thermal Trip, 3Ph Volt Alarm
5	Output R5	N/A	R5 Not Used
6	Output R6	N/A	R6 Not Used
7	Output R7	N/A	R7 Not Used
8	Output R8	N/A	R8 Not Used
9	Output R9	N/A	R9 Not Used
10	Output R10	N/A	R10 Not Used
11	Output R11	N/A	R11 Not Used
12	Output R12	N/A	R12 Not Used
13	Output R13	N/A	R13 Not Used
14	Output R14	N/A	R14 Not Used
15	Output R15	N/A	R15 Not Used
16	Output R16	N/A	R16 Not Used

Table 6: P242/3 relay output contacts default mappings

Note: A fault record can be generated by connecting one or a number of contacts to the “Fault Record Trigger” in PSL. It is recommended that the triggering contact be ‘self reset’ and not a latching. If a latching contact were chosen the fault record would not be generated until the contact had fully reset.

1.11 Programmable LED output mapping

The default mappings for each of the programmable LEDs are as shown in the following table for the P241 which have red LEDs:

LED number	LED input connection/text	Latched	P241 LED function indication
1	LED 1 Red	No	Opto Input 1 (CB Closed, 52a)
2	LED 2 Red	No	Opto Input 2 (CB Open, 52b)

LED number	LED input connection/text	Latched	P241 LED function indication
3	LED 3 Red	No	Opto Input 3 (Speed Switch)
4	LED 4 Red	No	Start in Progress
5	LED 5 Red	No	Re-acceleration in Progress
6	LED 6 Red	No	Start Successful
7	LED 7 Red	No	Re-acceleration Low Voltage Detected
8	LED 8 Red	No	Start Protection (Number of hot/cold starts, time between starts), Thermal Trip, 3Ph Volt Alarm

Table 7: P241 programmable LED default mappings

The default mappings for each of the programmable LEDs are as shown in the following table for the P242/3 and have tri-colour LEDS (red/yellow/green):

LED number	LED input connection/text	Latched	P242/3 LED function indication
1	LED 1 Green	No	Opto Input 1 (CB Closed, 52a)
1	LED 1 Red	No	Opto Input 2 (CB Open, 52b)
2	LED 2 Not Used		
3	LED 3 Yellow	No	Opto Input 3 (Speed Switch)
4	LED 4 Yellow	No	Start in Progress
5	LED 5 Yellow	No	Re-acceleration in Progress
6	LED 6 Green	No	Start Successful
7	LED 7 Yellow	No	Re-acceleration Low Voltage Detected
8	LED 8 Red	No	Start Protection (Number of hot/cold starts, time between starts), Thermal Trip, 3Ph Volt Alarm
9	FnKey LED1 (Yellow)	N/A	Emergency Restart
10	FnKey LED2 (Yellow)	N/A	Trip
11	FnKey LED3 (Yellow)	N/A	Close
12	FnKey LED4	N/A	Not Used
13	FnKey LED5 (Red)	N/A	Setting Group
14	FnKey LED6	N/A	Not Used
15	FnKey LED7	N/A	Not Used
16	FnKey LED8 (Yellow)	N/A	Reset Thermal
17	FnKey LED9 (Yellow)	N/A	Reset Latches
18	FnKey LED10 (Yellow)	N/A	Disturbance Recorder Trigger

Table 8: P242/3 programmable LED default mappings

1.12 Fault recorder start mapping

The default mapping for the signal which initiates a fault record is as shown in the following table:

Initiating signal	Fault trigger
Any Trip (DDB 371)	Initiate fault recording from any protection trip

Table 9: Default fault record initiation

2 MICOM P24x PROGRAMMABLE SCHEME LOGIC

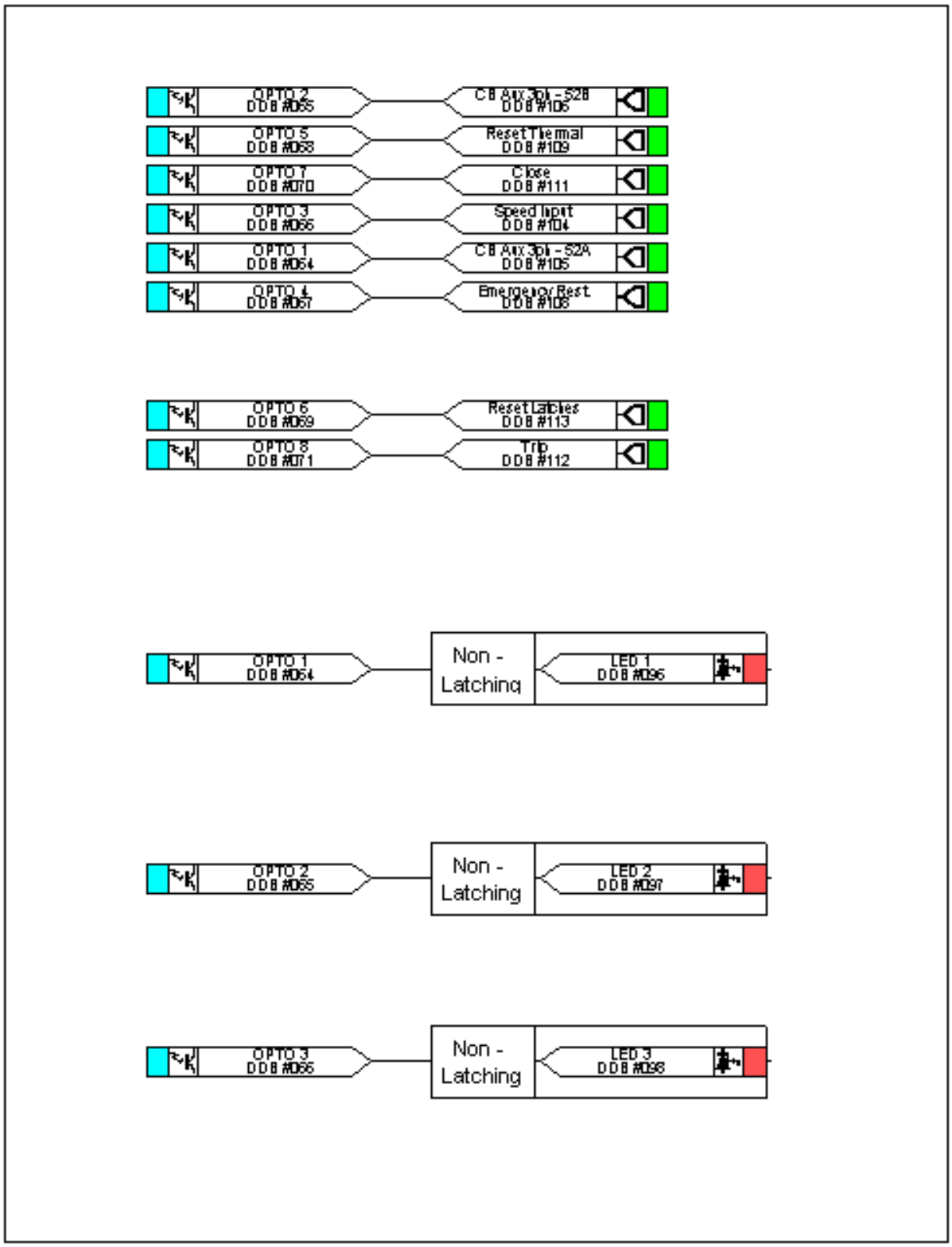

Figure 2: P241 Opto Input Mappings

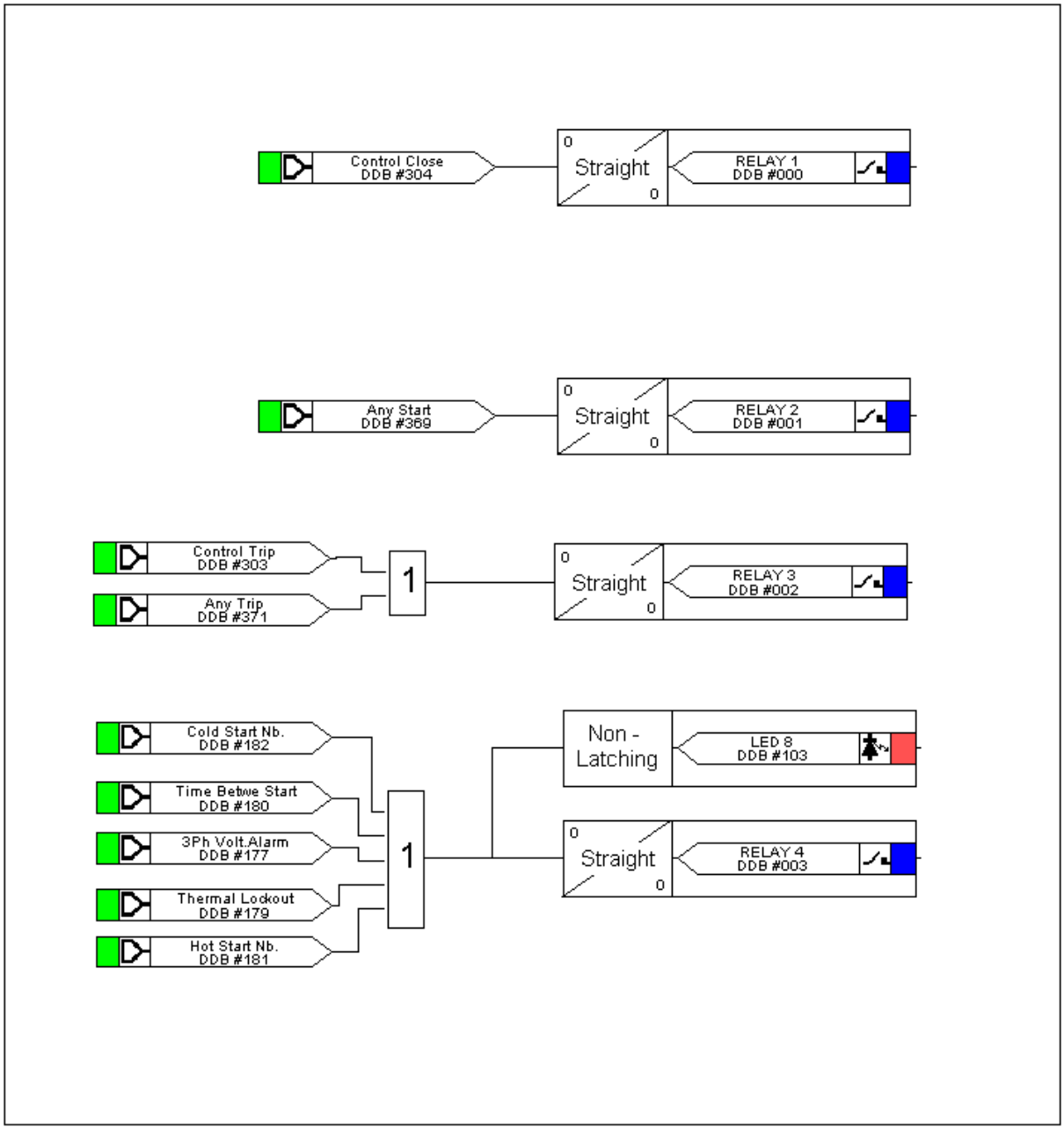

Figure 3: P241 Output Relay Mappings

PL

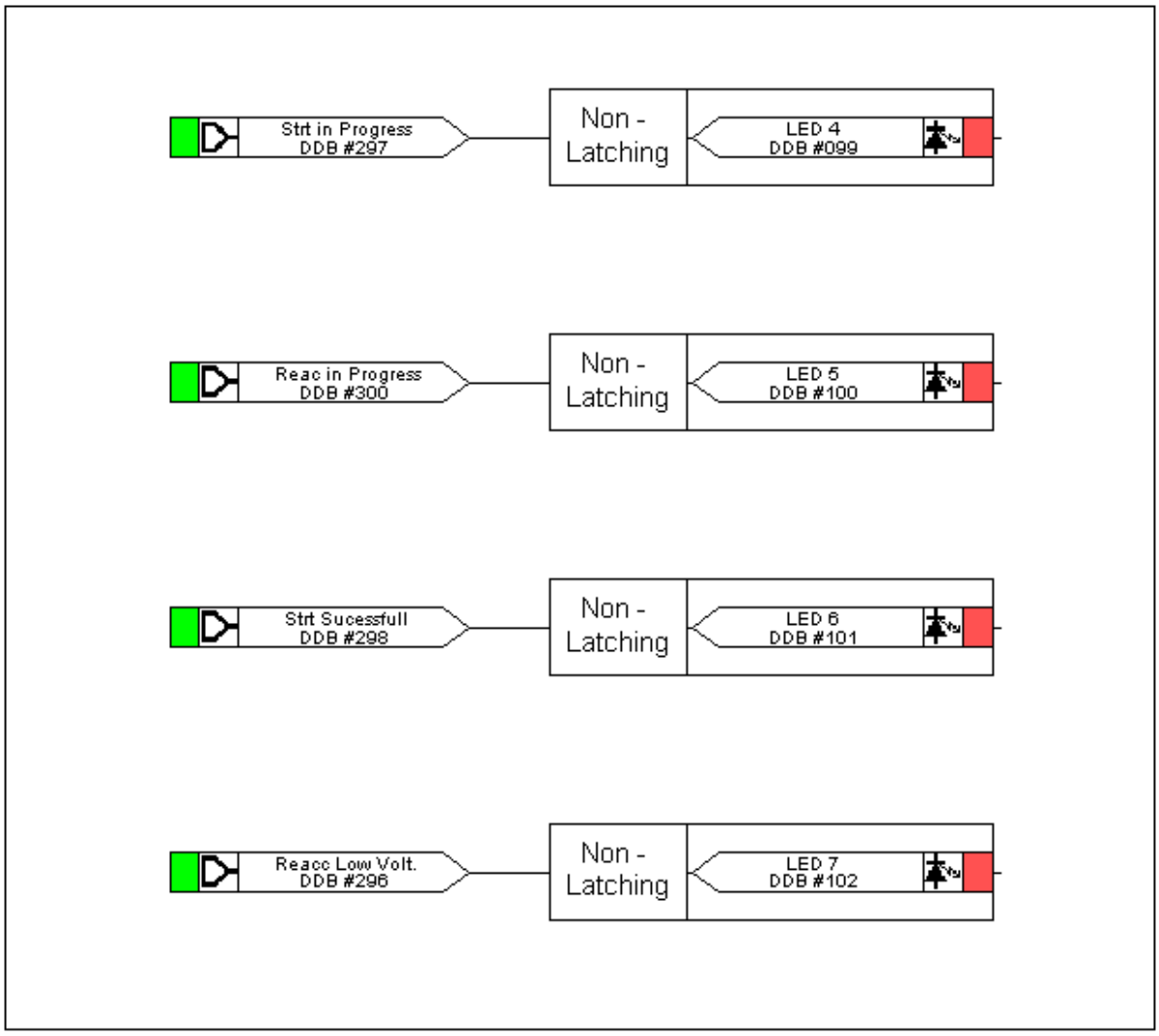

Figure 4: P241 LED Mappings

PL

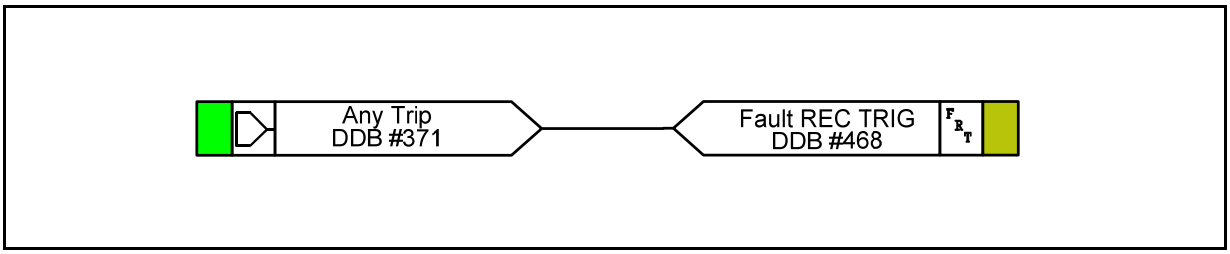

Figure 5: Fault Recorder Trigger Mapping

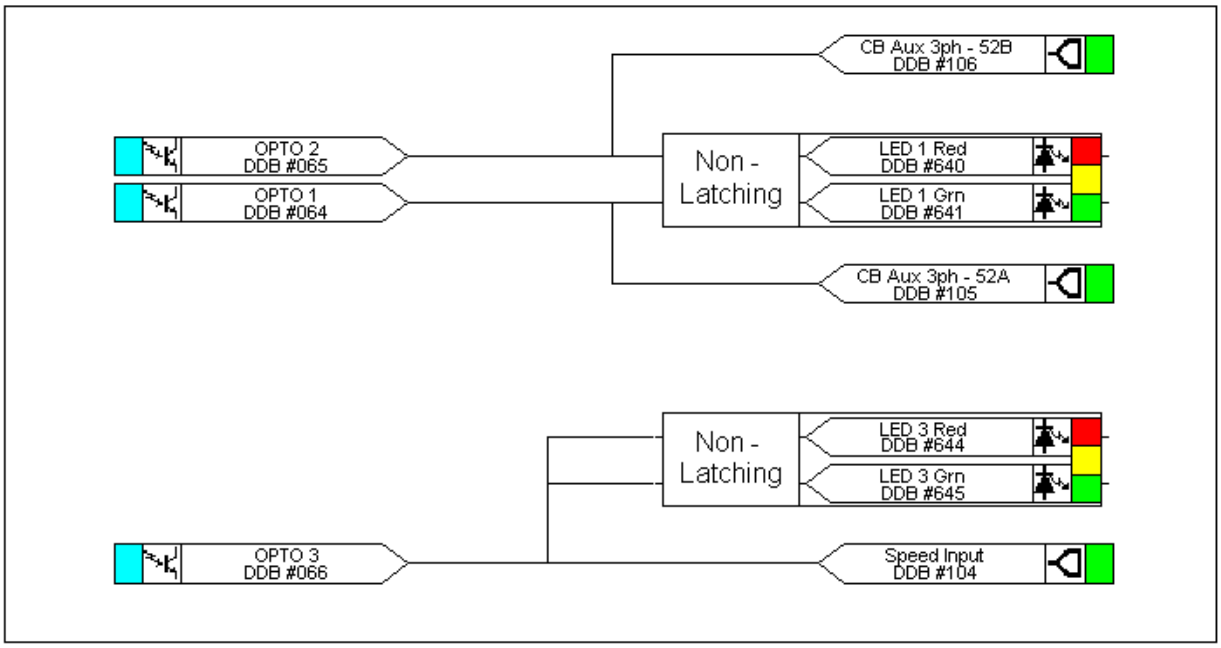

Figure 6: P242/3 Opto Input Mappings

PL

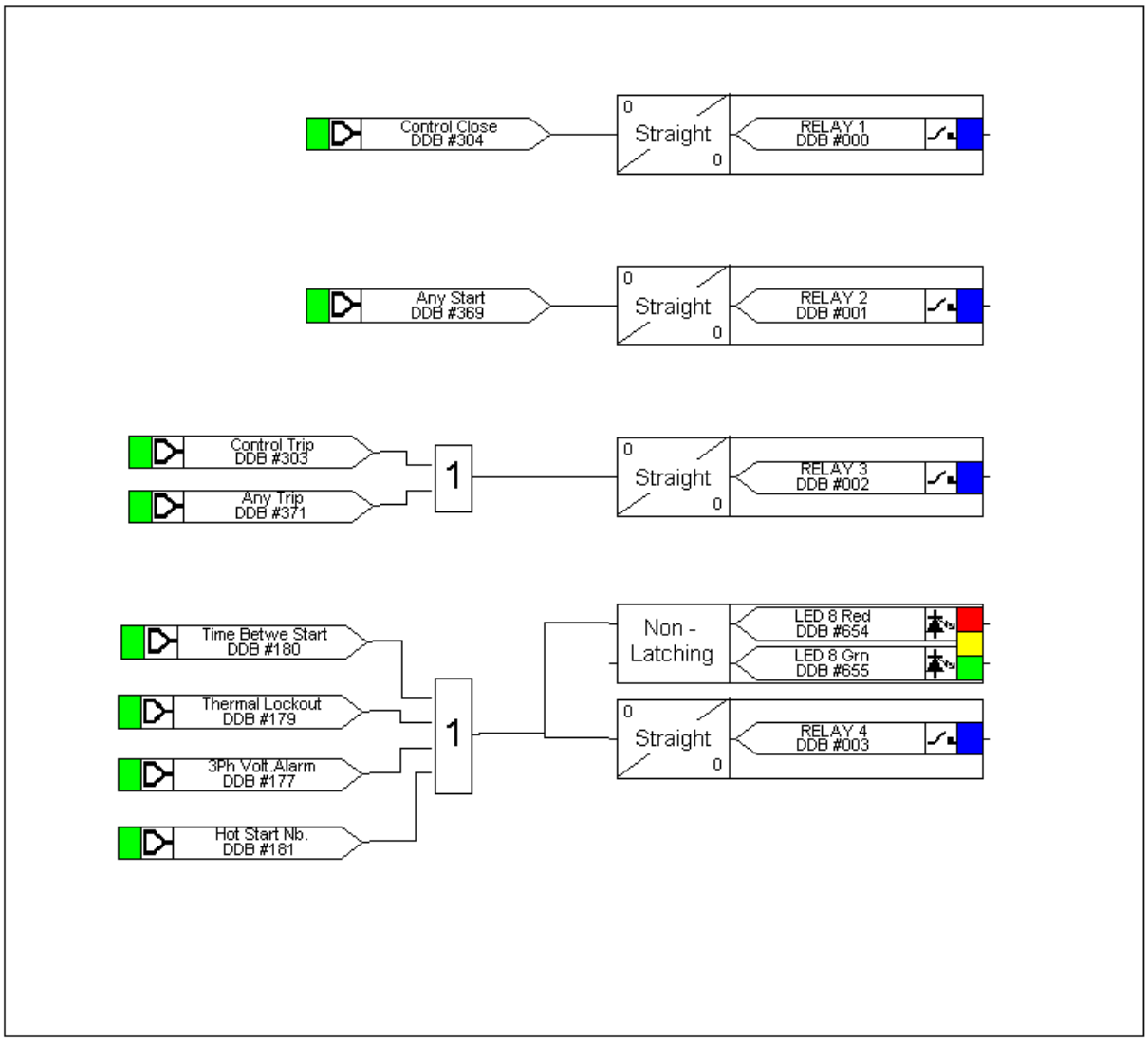

Figure 7: P242/3 Output Relay Mappings

PL

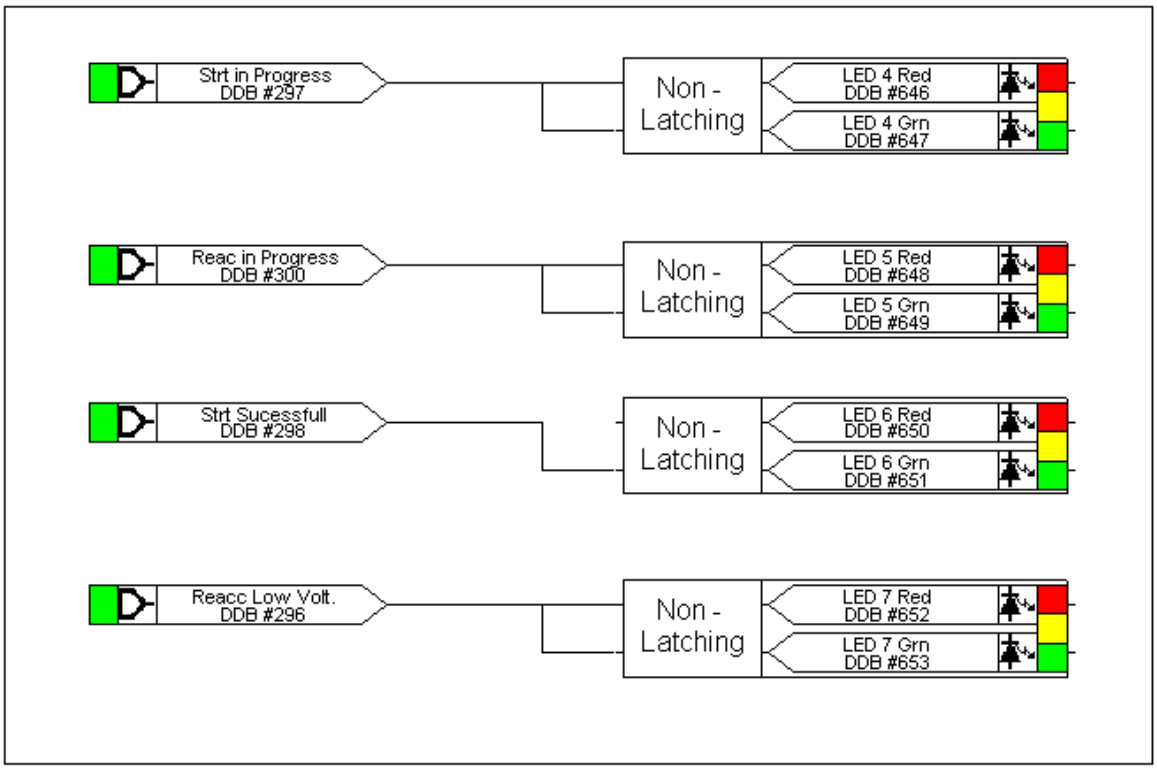

Figure 8: P242/3 LED Mappings

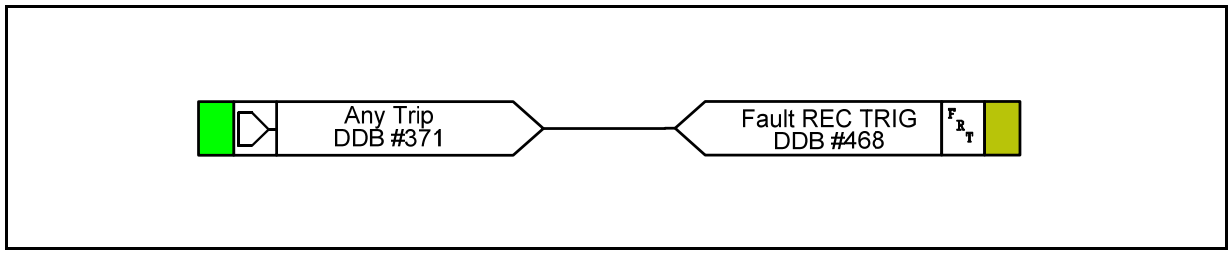

Figure 9: Fault Recorder Trigger Mapping

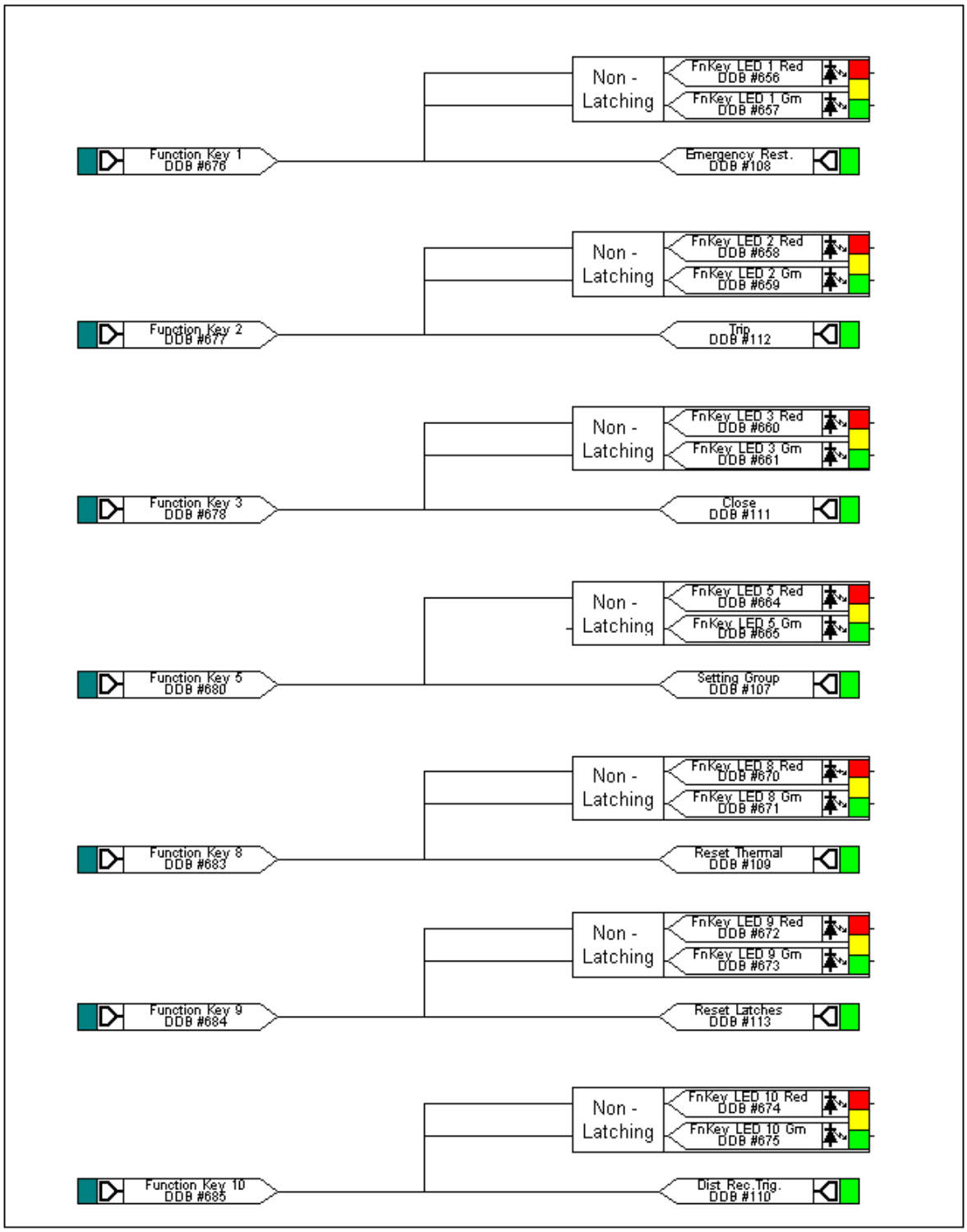

Figure 10: Function Key Mapping

PL

MEASUREMENTS AND RECORDING

MR

Date:	**24th November 2009**
Hardware suffix:	**J (P241) K (P242/3)**
Software version:	**57**
Connection diagrams:	**10P241xx (xx = 01 to 02)** **10P242xx (xx = 01 to 01)** **10P243xx (xx = 01 to 01)**

MR

CONTENTS

1	**MEASUREMENTS AND RECORDING**	**5**
1.1	**Introduction**	**5**
1.2	**Event & fault records**	**5**
1.2.1	Types of event	6
1.2.1.1	Change of state of opto-isolated inputs	6
1.2.1.2	Change of state of one or more output relay contacts	7
1.2.1.3	Relay alarm conditions	7
1.2.1.4	Protection element starts and trips	8
1.2.1.5	General (platform) events	8
1.2.1.6	Fault records	9
1.2.1.7	Maintenance reports	9
1.2.1.8	Setting changes	9
1.2.2	Resetting of event/fault records	9
1.2.3	Viewing event records via MiCOM S1 Studio support software	9
1.2.4	Event filtering	11
1.3	**Disturbance recorder**	**12**
1.4	**Measurements**	**14**
1.4.1	Measured voltages and currents	14
1.4.2	Sequence voltages and currents	14
1.4.3	Power and energy quantities	14
1.4.4	Rms. voltages and currents	14
1.4.5	Demand values	14
1.4.6	Settings	15
1.4.7	Measurement display quantities	15
1.4.8	Measurements 1	16
1.4.9	Measurements 2	17
1.4.10	Measurements 3 (product specific measurements)	18
1.4.11	Measurements 4 (product specific measurements)	19

TABLES

Table 1: Local viewing of records 6
Table 2: Examples of some of the alarm conditions and how they appear in the event list 8
Table 3: An example of a general/platform event and how it appears 8
Table 4: Examples of how setting changes are logged 9
Table 5: Filtering of event logs 12
Table 6: Disturbance Record (DR) settings 13
Table 7: Available measurement entities and corresponding settings 16
Table 8: List of Measurement 1 menu 17
Table 9: List of Measurement 2 menu 17
Table 10: List of Measurement 3 menu 18
Table 11: List of Measurement 4 menu 19

1 MEASUREMENTS AND RECORDING

1.1 Introduction

The P24x is equipped with integral measurements, event, fault and disturbance recording facilities suitable for analysis of complex system disturbances.

The relay is flexible enough to allow for the programming of these facilities to specific user application requirements and are discussed below.

1.2 Event & fault records

The relay records and time tags up to 250 events and stores them in non-volatile (battery backed up) memory. This enables the system operator to establish the sequence of events that occurred within the relay following a particular power system condition, switching sequence etc. When the available space is exhausted, the oldest event is automatically overwritten by the new one.

The real time clock within the relay provides the time tag to each event, to a resolution of 1 ms.

The event records are available for viewing either via the frontplate LCD or remotely, via the communications ports (courier and MODBUS versions only).

Local viewing on the LCD is achieved in the menu column entitled **VIEW RECORDS**. This column allows viewing of event, fault and maintenance records and is shown in the following table:

Menu text	Default setting	Setting range		Step size
		Min.	Max.	
VIEW RECORDS				
Select Event	0	0	249	
Setting range from 0 to 249. This selects the required event record from the possible 250 that may be stored. A value of 0 corresponds to the latest event and so on.				
Event Type	(From record)	Latched alarm active, Latched alarm inactive, Self reset alarm active, Self reset alarm inactive, Relay contact event, Opto-isolated input event, Protection event, General event, Fault record event, Maintenance record event		
Indicates the type of event.				
Time and Date	Data			
Time & Date Stamp for the event given by the internal Real Time Clock.				
Event text	Data.			
Up to 32 Character description of the Event. See event sheet in the Relay Menu Database document, *P24x/EN/MD* or the Measurements and Recording chapter, *P24x/EN/MR* for details.				
Event Value	Data.			
32 bit binary string indicating ON or OFF (1 or 0) status of relay contact or opto input or alarm or protection event depending on event type. Unsigned integer is used for maintenance records. See event sheet in the Relay Menu Database document, *P24x/EN/MD* or Measurements and Recording chapter, *P24x/EN/MR* for details.				
Select Fault	0	0	4	1
Setting range from 0 to 4. This selects the required fault record from the possible 5 that may be stored. A value of 0 corresponds to the latest fault and so on.				
Start elements	00000000000000000000000000000000			
32 bit binary string gives status of first 32 start signals. See Data Type G84 in the Relay Menu Database document, *P24x/EN/MD* for details.				
Trip elements 1	00000000000000000000000000000000			
32 bit binary string gives status of first 32 trip signals. See Data Type G85 in the Relay Menu Database document, *P24x/EN/MD* for details.				

MR

Menu text	Default setting	Setting range		Step size
		Min.	Max.	
Trip elements 2	00000000000000000000000000000000			
32 bit binary string gives status of second 32 trip signals. See Data Type G86 in the Relay Menu Database document, *P24x/EN/MD* for details.				
Faulted Phase	00000000			
Displays the faulted phase as a binary string, bits 0 – 8 = Start A/B/C/N Trip A/B/C/N.				
Fault Alarms	00000000000000000000000000000000			
This menu cell displays the status of the 32 fault alarms as a binary string, a **1** indicating an ON state and **0** an OFF state. See Data Type G87 in the Relay Menu Database document, *P24x/EN/MD* for details.				
Active Group				
Active setting group 1-2.				
Fault Time	Data.			
Fault Time and Date				
System Frequency	Data			
System frequency.				
The following cells provide measurement information of the fault : IA, IB, IC, VAB, VBC, VCA, VAN, IN Derived, IN, Thermal State, I2, 3Ph Power Factor, IN>PO, VN, 3-Phase Active Power, RTD 1-10 Temperature, IA2, IB2, IC2, IA/IB/IC Differential, IA/IB/IC Bias, Analog Input 1-4.				
Select Report	0	0	4	1
Setting range from 0 to 4. This selects the required maintenance report from the possible 5 that may be stored. A value of 0 corresponds to the latest report and so on.				
Report Text	Data.			
Up to 32 Character description of the occurrence. See Measurements and Recording chapter, *P24x/EN/MR* for details.				
Maintenance Type	Data.			
Maintenance record fault type. This will be a number defining the fault type.				
Maintenance Data	Data.			
Error code associated with the failure found by the self monitoring. The Maint Type and Data cells are numbers representative of the occurrence. They form a specific error code which should be quoted in any related correspondence to Report Data.				
Reset Indication	No	No/Yes		N/A
Resets latched LEDs and latched relay contacts provided the relevant protection element has reset.				

Table 1: Local viewing of records

For extraction from a remote source via communications, refer to the SCADA Communications chapter (*P24x/EN SC*), where the procedure is fully explained.

Note: A full list of all the event types and the meaning of their values is given in the Relay Menu Database document *P24x/EN MD*.

1.2.1 Types of event

An event may be a change of state of a control input or output relay, an alarm condition, setting change etc. The following sections show the various items that constitute an event:

1.2.1.1 Change of state of opto-isolated inputs

If one or more of the opto (logic) inputs has changed state since the last time that the protection algorithm ran, the new status is logged as an event. When this event is selected to be viewed on the LCD, three applicable cells will become visible as shown below:

Time & date of event
“LOGIC INPUTS”
“Event Value 0101010101010101”

The Event Value is an 8, or 16-bit word showing the status of the opto inputs, where the least significant bit (extreme right) corresponds to opto input 1 etc. The same information is present if the event is extracted and viewed via PC.

1.2.1.2 Change of state of one or more output relay contacts

If one or more of the output relay contacts have changed state since the last time that the protection algorithm ran, then the new status is logged as an event. When this event is selected to be viewed on the LCD, three applicable cells will become visible as shown below:

Time & date of event
"OUTPUT CONTACTS"
"Event Value 01010101010101010101"

The Event Value is a 7 or 16 bit word showing the status of the output contacts, where the least significant bit (extreme right) corresponds to output contact 1 etc. The same information is present if the event is extracted and viewed via PC.

1.2.1.3 Relay alarm conditions

Any alarm conditions generated by the relays will also be logged as individual events. The following table shows examples of some of the alarm conditions and how they appear in the event list:

Alarm condition	Resulting event	
	Event text	Event value
Alarm Status 1 (Alarms 1 - 32) (32 bits)		
General Alarm	General Alarm ON/OFF	Bit position 2 in 32 bit field
Protection Disabled	Prot'n Disabled ON/OFF	Bit position 3 in 32 bit field
Frequency Out of Range	Freq out of Range ON/OFF	Bit position 4 in 32 bit field
3Phases Voltage Alarm	3Ph Volt. Alarm ON/OFF	Bit position 5 in 32 bit field
Thermal Alarm	Thermal Alarm ON/OFF	Bit position 6 in 32 bit field
Thermal Lockout	Thermal Lockout ON/OFF	Bit position 7 in 32 bit field
Time Between start	Time Between start ON/OFF	Bit position 8 in 32 bit field
Hot start Number	Hot start Number ON/OFF	Bit position 9 in 32 bit field
Cold start Number	Cold start Number ON/OFF	Bit position 10 in 32 bit field
Manual CB Trip Fail	Manual CB Trip Fail ON/OFF	Bit position 11 in 32 bit field
Manual CB Close Fail	Manual CB Close Fail ON/OFF	Bit position 12 in 32 bit field
CB Status Alarm	CB Status Alarm ON/OFF	Bit position 13 in 32 bit field
I^Maint Alarm	I^Maint Alarm ON/OFF	Bit position 14 in 32 bit field
CB Ops Maintenance	CB Ops Maintenance ON/OFF	Bit position 15 in 32 bit field
CB Op Time Maintenance	CB Op Time Maintenance ON/OFF	Bit position 16 in 32 bit field
3 Phases Watts Alarm	3 Phases Watts Alarm ON/OFF	Bit position 17 in 32 bit field
3 Phases Var Alarm	3 Phases Var Alarm ON/OFF	Bit position 18 in 32 bit field
RTD 1-10Alarm	RTD 1-10 Alarm ON/OFF	Bit position 19-28 in 32 bit field
RTD Short Circuit	RTD Short Circuit ON/OFF	Bit position 29 in 32 bit field
RTD Open Circuit	RTD Open Circuit ON/OFF	Bit position 30 in 32 bit field
RTD Data Error	RTD Data Error ON/OFF	Bit position 31 in 32 bit field
Alarm Status 2 (Alarms 1 - 32) (32 bits)		
Setting Group Via Opto Invalid	Setting Grp Invalid ON/OFF	Bit position 0 in 32 bit field
Disturbance Record Configuration Alarm	Dist. Rec. Conf. ON/OFF	Bit position 1 in 32 bit field
CB Fail Alarm	CB Fail Alarm ON/OFF	Bit position 2 in 32 bit field
Watts Fwd Alarm	Watts Fwd ON/OFF	Bit position 3 in 32 bit field

Alarm condition	Resulting event	
	Event text	Event value
Watts Rev Alarm	Watts Rev ON/OFF	Bit position 4 in 32 bit field
Vars Fwd Alarm	Vars Fwd ON/OFF	Bit position 5 in 32 bit field
Vars Rev Alarm	Vars Rev ON/OFF	Bit position 6 in 32 bit field
Analog Input1 Alarm	Analog Inp1 ON/OFF	Bit position 7 in 32 bit field
Analog Input2 Alarm	Analog Inp2 ON/OFF	Bit position 8 in 32 bit field
Analog Input3 Alarm	Analog Inp3 ON/OFF	Bit position 9 in 32 bit field
Analog Input4 Alarm	Analog Inp4 ON/OFF	Bit position 10 in 32 bit field
MR User Alarm 1 - 8 (Manual Reset)	MR User Alarm 1 - 8 ON/OFF	Bit position 11 - 18 in 32 bit field
SR User Alarm 9 - 16 (Self Reset)	SR User Alarm 1 - 4 ON/OFF	Bit position 19 - 26 in 32 bit field
Hour Run Alarm1	Hour Run Alarm1 ON/OFF	Bit position 27 in 32 bit field
Hour Run Alarm2	Hour Run Alarm2 ON/OFF	Bit position 28 in 32 bit field
Antibackspin Alarm	Antibkspin ON/OFF	Bit position 29 in 32 bit field
Field Failure Alarm	FieldFail ON/OFF	Bit position 30 in 32 bit field
Alarm Status 3 (Alarms 1 - 32) (32 bits)		
Battery Fail	Battery Fail ON/OFF	Bit position 0 in 32 bit field
Field Voltage Fail	Field V Fail ON/OFF	Bit position 1 in 32 bit field

Table 2: Examples of some of the alarm conditions and how they appear in the event list

The previous table shows the abbreviated description that is given to the various alarm conditions and also a corresponding value between 0 and 31. This value is appended to each alarm event in a similar way as for the input and output events previously described. It is used by the event extraction software, such as MiCOM S1 Studio, to identify the alarm and is therefore invisible if the event is viewed on the LCD. Either ON or OFF is shown after the description to signify whether the particular condition has become operated or has reset.

MR

The User Alarms can be operated from an opto input or a control input using the PSL. They give an alarm LED and message on the LCD display and an alarm indication via the communications of an external condition, for example trip circuit supervision alarm, rotor earth fault alarm. The menu text editor in MiCOM S1 Studio can be used to edit the user alarm text to give a more meaningful description on the LCD display.

1.2.1.4 Protection element starts and trips

Any operation of protection elements, (either a start or a trip condition) will be logged as an event record, consisting of a text string indicating the operated element and an event value. Again, this value is intended for use by the event extraction software, such as MiCOM S1 Studio, rather than for the user, and is therefore invisible when the event is viewed on the LCD.

1.2.1.5 General (platform) events

A number of events come under the heading of ‘General/Platform Events’ - an example is shown below:

Nature of event	Displayed text in event record	Displayed value
Level 1 password modified, either from user interface, front or rear port.	PW1 modified UI, F, R or R2	0 UI=6, F=11, R=16, R2=38

Table 3: An example of a general/platform event and how it appears

A complete list of the ‘General/Platform Events’ are given in the Relay Menu Database, (*P24x/EN MD*) document.

1.2.1.6 Fault records

Each time a fault record is generated, an event is also created. The event simply states that a fault record was generated, with a corresponding time stamp.

You can view the fault record in the **Select Fault** cell further down the **VIEW RECORDS** column, which is selectable from up to 5 records. These records consist of fault flags, fault location, fault measurements etc.

Note: The time stamp given in the fault record itself will be more accurate than the corresponding stamp given in the event record as the event is logged some time after the actual fault record is generated.

The fault record is triggered from the **Fault REC. TRIG.** (DDB468) signal assigned in the default programmable scheme logic to **Any Trip** (DDB371) signal. The fault measurements in the fault record are given at the time of the protection start. Also, the fault recorder does not stop recording until any start (DDB 369) or the any trip signals (DDB 371) resets in order to record all the protection flags during the fault.

It is recommended that any signal connected to the Fault Record Trigger signal be 'self reset' and not latching. If a latching contact/signal was connected to the trigger the fault record would not be generated until the contact/signal had fully reset.

1.2.1.7 Maintenance reports

Internal failures detected by the self-monitoring circuitry, such as watchdog failure, field voltage failure etc. are logged into a maintenance report. The maintenance report holds up to 5 such 'events' and is accessed from the **Select Report** cell at the bottom of the **VIEW RECORDS** column.

Each entry consists of a self explanatory text string and a Type and Data cell, which is explained in the menu extract at the beginning of this section and in further detail in the document *P24x/EN MD*.

Each time a Maintenance report is generated, an event is also created. The event simply states that a report was generated, with a corresponding time stamp.

MR

1.2.1.8 Setting changes

Changes to any setting within the relay are logged as an event. Two examples are shown in the following table:

Type of setting change	Displayed text in event record	Displayed value
Control/Support Setting	C & S Changed	22
Group # Change	Group # Changed	#

Table 4: Examples of how setting changes are logged

Note: Control/Support settings are communications, measurement, CT/VT ratio settings etc, which are not duplicated within the two setting groups. When any of these settings are changed, the event record is created simultaneously. However, changes to protection or disturbance recorder settings will only generate an event once the settings have been confirmed at the 'setting trap'.

1.2.2 Resetting of event/fault records

If it is required to delete either the event, fault or maintenance reports, this may be done from within the **RECORD CONTROL** column.

1.2.3 Viewing event records via MiCOM S1 Studio support software

When the event records are extracted and viewed on a PC they look slightly different than when viewed on the LCD. The following shows an example of how various events appear when displayed using MiCOM S1 Studio:

- Thursday 23 August 2007 16:00:36.501 CB Status Aalarm ON

SCHNEIDER ELECTRIC: MiCOM P24x

Model Number: P242214C2M0330C

Address: 001 Column: 00 Row: 50

Event Type: Alarm event

Event Value: 00000000000000000001000000000000

OFF 0 External Trip

OFF 1 Field Volt Fail

OFF 2 F Out of Range

OFF 3 3 Ph Volt Alarm

OFF 4 Thermal Alarm

OFF 5 Thermal Lockout

OFF 6 Time Between Start

OFF 7 Hot Start Nb

OFF 8 Cold Start Nb

OFF 9 Man CB Trip Fail

OFF 10 Man CB Cls Fail

ON 11 CB Status Alarm

OFF 12 I^ Maint Alarm

OFF 13 CB Ops Maint

OFF 14 CB Op Time Maint

OFF 15 3 Ph Watt Alarm

OFF 16 3 Ph Var Alarm

OFF 17 Invalid Set. Grp

OFF 18 Prot'n Disabled

OFF 19 RTD 1 Alarm

OFF 20 RTD 2 Alarm

OFF 21 RTD 3 Alarm

OFF 22 RTD 4 Alarm

OFF 23 RTD 5 Alarm

OFF 24 RTD 6 Alarm

OFF 25 RTD 7 Alarm

OFF 26 RTD 8 Alarm

OFF 27 RTD 9 Alarm

OFF 28 RTD 10 Alarm

OFF 29 RTD Short Cct

OFF 30 RTD Open Cct

OFF 31 RTD Data Error

- Friday 24 August 2007 07:32:28.634 Output Contacts

SCHNEIDER ELECTRIC: MiCOM P24x

Model Number: P242214C2M0330C

Address: 001 Column: 00 Row: 21

Event Type: Device output changed state

Event Value: 0000000000000100

OFF 0	RELAY 1
OFF 1	RELAY 2
OFF 2	RELAY 3
ON 3	RELAY 4
OFF 4	RELAY 5
OFF 5	RELAY 6
OFF 6	RELAY 7
OFF 7	RELAY 8
OFF 8	RELAY 9
OFF 9	RELAY 10
OFF 10	RELAY 11
OFF 11	RELAY 12
OFF 12	RELAY 13
OFF 13	RELAY 14
OFF 14	RELAY 15
OFF 15	RELAY 16

The first line gives the description and time stamp for the event, while the additional information that is displayed below may be collapsed using the +/– symbol.

For further information regarding events and their specific meaning, refer to the Relay Menu Database document, *P24x/EN MD*. This is a standalone document not included in this manual.

1.2.4 Event filtering

It is possible to disable the reporting of events from all interfaces that supports setting changes. The settings that control the various types of events are in the record control column. The effect of setting each to disabled is as follows:

Menu text	Default setting	Available settings
RECORD CONTROL		
Clear Events	No	No or Yes
Selecting **Yes** will cause the existing event log to be cleared and an event will be generated indicating that the events have been erased.		
Clear Faults	No	No or Yes
Selecting **Yes** will cause the existing fault records to be erased from the relay.		
Clear Test Log	No	No or Yes
Selecting **Yes** will cause the existing maintenance records to be erased from the relay.		
Alarm Event	No	No/Yes
Disabling this setting means that no event will be generated for all alarms.		

MR

Menu text	Default setting	Available settings
Output Event	No	No/Yes
Disabling this setting means that no event will be generated for any change in relay output contact state.		
Opto Input Event	No	No/Yes
Disabling this setting means that no event will be generated for any change in logic input state.		
Relay Sys Event	No	No/Yes
Disabling this setting means that no General Events will be generated. See event record sheet in the Relay Menu Database, *P24x/EN MD* for a list of general events.		
Fault Rec Event	No	No/Yes
Disabling this setting means that no event will be generated for any fault that produces a fault record.		
Maint. Rec Event	No	No/Yes
Disabling this setting means that no event will be generated for any maintenance records.		
Protection Event	No	No/Yes
Disabling this setting means that no event will be generated for any operation of the protection elements.		
DDB 31 - 0	11111111111111111111111111111111	
32 bit setting to enable or disable the event recording for DDBs 0-31. For each bit 1 = event recording Enabled, 0 = event recording Disabled.		
DDB 1022 - 992	11111111111111111111111111111111	
32 bit setting to enable or disable the event recording for DDBs 1022 – 992. For each bit 1 = event recording Enabled, 0 = event recording Disabled. There are similar cells showing 32 bit binary strings for all DDBs from 0 – 1022. The first and last 32 bit binary strings only are shown here.		
Clear Dist Recs	No	No/Yes
Clears all stored disturbance records from the relay		

Table 5: Filtering of event logs

MR

Note: Some occurrences will result in more than one type of event, for example a battery failure will produce an alarm event and a maintenance record event.

If the Protection Event setting is enabled a further set of settings is revealed which allow the event generation by individual DDB signals to be enabled or disabled.

For further information regarding events and their specific meaning, refer to Relay Menu Database document *P24x/EN MD*.

1.3 Disturbance recorder

The integral disturbance recorder has an area of memory specifically set aside for record storage. The number of records that may be stored by the relay is dependent upon the selected recording duration. The relay can typically store a minimum of 50 records, each of 1.5 seconds duration (8 analogue channels and 32 digital channels). VDEW relays, however, have the same total record length but the VDEW protocol dictates that only 8 records can be extracted via the rear port. Disturbance records continue to be recorded until the available memory is exhausted, at which time the oldest record(s) are overwritten to make space for the newest one.

The recorder stores actual samples that are taken at a rate of 24 samples per cycle.

Each disturbance record consists of a maximum of 8 analog data channels for P241/2/3 and thirty-two digital data channels. The relevant CT and VT ratios for the analog channels are also extracted to enable scaling to primary quantities.

Note: If a CT ratio is set less than unity, the relay will choose a scaling factor of zero for the appropriate channel.

The **DISTURBANCE RECORDER** menu column is shown in the following table:

Menu text	Default setting	Setting range		Step size
		Min.	Max.	
DISTURB RECORDER				
Duration	1.5 s	0.1 s	10.5 s	0.01 s
Overall recording time setting.				
Trigger Position	30%	0	100%	0.1%
Trigger point setting as a percentage of the duration. For example, the default settings show that the overall recording time is set to 1.5 s with the trigger point being at 33.3% of this, giving 0.5 s pre-fault and 1s post fault recording times.				
Trigger Mode	Single	Single or Extended		
If set to single mode, if a further trigger occurs whilst a recording is taking place, the recorder will ignore the trigger. However, if this has been set to Extended, the post trigger timer will be reset to zero, thereby extending the recording time.				
Analog. Channel 1	VAN	VA, VB, VC, IA, IB, IC, IN, IA-2, IB-2, IC-2, VAB, VBC, VN, VRM		
Selects any available analog input to be assigned to this channel.				
Analog. Channel 2	VBN	As above		
Analog. Channel 3	VCN	As above		
Analog. Channel 4	IA	As above		
Analog. Channel 5	IB	As above		
Analog. Channel 6	IC	As above		
Analog. Channel 7	IN	As above		
Analog. Channel 8	IN	As above		
Digital Input 1 to 32	Relays 1 to 12 and Opto's 1 to 12	Any of 16 O/P Contacts or Any of 16 Opto Inputs or Internal Digital Signals		
The digital channels may be mapped to any of the opto isolated inputs or output contacts, in addition to a number of internal relay digital signals, such as protection starts, LEDs etc.				
Input 1 to 32 Trigger	No Trigger except Dedicated Trip Relay O/P's which are set to Trigger Edge -/+	No Trigger, Trigger Edge -/+, Trigger Edge +/-		
Any of the digital channels may be selected to trigger the disturbance recorder on either a low to high (-/+) or a high to low (+/-) transition.				

Table 6: Disturbance Record (DR) settings

The pre and post fault recording times are set by a combination of the **Duration** and **Trigger Position** cells. **Duration** sets the overall recording time and the **Trigger Position** sets the trigger point as a percentage of the duration. For example, the default settings show that the overall recording time is set to 1.5 s with the trigger point being at 30% of this, giving 0.5 s pre-fault and 1 s post fault recording times.

If a further trigger occurs whilst a recording is taking place, the recorder will ignore the trigger if the **Trigger Mode** has been set to **Single**. However, if this has been set to **Extended**, the post trigger timer will be reset to zero, therefore extending the recording time.

The menu shows each of the analog channels is selectable from the available analog inputs to the relay. The digital channels may be mapped to any of the opto isolated inputs or output contacts, in addition to a number of internal relay digital signals, such as protection starts, LEDs etc. The complete list of these signals may be found by viewing the available settings in the relay menu or via a setting file in MiCOM S1 Studio. Any of the digital channels may be selected to trigger the disturbance recorder on either a low to high (-/+) or a high to low (+/-) transition, via the **Input Trigger** cell. The default trigger settings are that any dedicated trip output contacts (e.g. relay 3) will trigger the recorder.

It is not possible to view the disturbance records locally using the LCD; they must be extracted using suitable software such as MiCOM S1 Studio. This process is fully explained in the SCADA Communications chapter, *P24x/EN SC*.

1.4 Measurements

The relay produces a variety of both directly measured and calculated power system quantities. These measurement values are updated on a per second basis and can be viewed in the **Measurements** columns (up to four) of the relay or through MiCOM S1 Studio Measurement viewer. The P24x relay is able to measure and display the following quantities as summarized.

- Phase Voltages and Currents
- Phase to Phase Voltage and Currents
- Sequence Voltages and Currents
- Power and Energy Quantities
- Rms. Voltages and Currents
- Peak and Fixed Demand Values

There are also measured values from the protection functions, which are also displayed under the measurement columns of the menu; these are described in the section on the relevant protection function.

1.4.1 Measured voltages and currents

The relay produces both phase to ground and phase to phase voltage and current values. They are produced directly from the DFT (Discrete Fourier Transform) used by the relay protection functions and present both magnitude and phase angle measurement.

1.4.2 Sequence voltages and currents

Sequence quantities are produced by the relay from the measured Fourier values; these are displayed as magnitude values..

1.4.3 Power and energy quantities

Using the measured voltages and currents the relay calculates the apparent, real and reactive power quantities. These are produced as three-phase values based on the sum of the three individual phase values. In addition to the measured power quantities the relay calculates a three-phase power factor.

These power values are also used to increment the total real and reactive energy measurements. Separate energy measurements are maintained for the total exported and imported energy. The energy measurements are incremented up to maximum values of 1000 GWhr or 1000 GVARhr at which point they will reset to zero, it is also possible to reset these values using the menu or remote interfaces using the reset demand cell.

1.4.4 Rms. voltages and currents

Rms. phase voltage and current values are calculated by the relay using the sum of the samples squared over a cycle of sampled data.

1.4.5 Demand values

The relay produces fixed, rolling and peak demand values, using the reset demand menu cell it is possible to reset these quantities via the user interface or the remote communications.

Fixed demand values

The fixed demand value is the average value of a quantity over the specified interval; values are produced for each phase current and for three phase real and reactive power. The fixed demand values displayed by the relay are those for the previous interval, the values are updated at the end of the fixed demand period.

Peak demand values

Peak demand values are produced for each phase current and the real and reactive power quantities. These display the maximum value of the measured quantity since the last reset of the demand values.

1.4.6 Settings

The following settings under the heading measurement set-up can be used to configure the relay measurement function.

1.4.7 Measurement display quantities

There are three **Measurement** columns available in the relay for viewing of measurement quantities. These can also be viewed with MiCOM S1 Studio (see MiCOM Px40 – Monitoring section of the MiCOM S1 Studio User Manual) and are shown below:

Menu text	Default settings	Available settings	
MEASURE'T SETUP			
Default Display	Description	3Ph + N Current/3Ph Voltage/Power/Date and Time/Description/Plant Reference/Frequency/Thermal State	
This setting can be used to select the default display from a range of options, note that it is also possible to view the other default displays whilst at the default level using the □and □ keys. However once the 15 minute timeout elapses the default display will revert to that selected by this setting.			
Local Values	Primary	Primary/Secondary	
This setting controls whether measured values via the front panel user interface and the front courier port are displayed as primary or secondary quantities.			
Remote Values	Primary	Primary/Secondary	
This setting controls whether measured values via the rear communication port are displayed as primary or secondary quantities.			
Measurement Ref.	VA	VA/VB/VC/IA/IB/IC	
Using this setting the phase reference for all angular measurements by the relay can be selected.			
Fix Dem Period	30 minutes	1 to 99 minutes step 1 minute	
This setting defines the length of the fixed demand window.			
Alarm Fix Dem	Invisible	Invisible/Visible	
Sets the Alarm Fix Demand Status menu visible in the relay settings.			
3Ph W Thresh	50 Vn*In	1 Vn*In	120 Vn*In
3 phase watt alarm setting.			
3Ph VArs Thresh	50 Vn*In	1 Vn*In	120 Vn*In
3 phase VArs alarm setting.			
Alarm Energies	Invisible	Invisible/Visible	
Sets the Alarm Energies Status menu visible in the relay settings.			
W Fwd Thresh	50 V1*I1	1 Vn*In	1000 Vn*In
3 phase Watt Hour Forward alarm setting.			
W Rev Thresh	50 V1*I1	1 Vn*In	1000 Vn*In
3 phase Watt Hour Reverse alarm setting.			
VAr Fwd Thresh	50 V1*I1	1 Vn*In	1000 Vn*In
3 phase VAr Hour Forward alarm setting.			
VAr Rev Thresh	50 V1*I1	1 Vn*In	1000 Vn*In
3 phase VAr Hour Reverse alarm setting.			
Motor Hour Run > 1	Disabled	Disabled/Enabled	
Enables or disables the first stage Hour Run Meter element.			
Motor Hour Run > 1	500 hours	1 Hour	9999 Hours
Hour Run Meter stage 1 setting.			
Motor Hour Run > 2	Disabled	Disabled/Enabled	
Enables or disables the second stage Hour Run Meter element.			
Motor Hour Run > 2	500 Hours	1 Hour	9999 Hours
Hour Run Meter stage 2 setting.			

Menu text	Default settings	Available settings
MEASURE'T SETUP		
Remote 2 Values	Primary	Primary/Secondary
This setting controls whether measured values via the second rear communication port are displayed as primary or secondary quantities.		

Table 7: Available measurement entities and corresponding settings

1.4.8 Measurements 1

This menu provides measurement information.

Menu text	Default setting	Setting range		Step size
		Min.	Max.	
MEASUREMENTS 1				
IA Magnitude	Data.			
IA Phase Angle	Data.			
IB Magnitude	Data.			
IB Phase Angle	Data			
IC Magnitude	Data.			
IC Phase Angle	Data.			
IN Derived Mag	Data.			
IN Derived Angle	Data.			
I SEF Magnitude	Data.			
I SEF Angle	Data.			
I1 Magnitude	Data. Positive sequence current.			
I2 magnitude	Data. Negative sequence current.			
I0 Magnitude	Data. Zero sequence current.			
IA RMS	Data.			
IB RMS	Data.			
IC RMS	Data.			
IN RMS	Data			
VAB Magnitude	Data.			
VAB Phase Angle	Data.			
VBC Magnitude	Data.			
VBC Phase Angle	Data.			
VCA Magnitude	Data.			
VCA Phase Angle	Data.			
VAN Magnitude	Data. If Anti-backspin function is disabled			
VAN Phase Angle	Data. If Anti-backspin function is disabled			
VBN Magnitude	Data. If Anti-backspin function is disabled			
VBN Phase Angle	Data. If Anti-backspin function is disabled			
VCN Magnitude	Data. If Anti-backspin function is disabled			
VCN Phase Angle	Data. If Anti-backspin function is disabled			
VN Magnitude	Data. If Anti-backspin function is disabled			
VN Phase Angle	Data. If Anti-backspin function is disabled			
Vr Antibacks Mag	Data. If Anti-backspin function is enabled			
V1 Magnitude	Data. Positive sequence voltage.			
V2 Magnitude	Data. Negative sequence voltage.			
VA RMS Magnitude	Data. If Anti-backspin function is disabled			
VB RMS Magnitude	Data. If Anti-backspin function is disabled			

MR

Menu text	Default setting	Setting range		Step size
		Min.	Max.	
VC RMS Magnitude	Data. If Anti-backspin function is disabled			
VAB RMS Magnitud	Data.			
VBC RMS Magnitud	Data.			
VCA RMS Magnitud	Data.			
Frequency	Data.			
Ratio I2/I1	Data			
IA2 Magnitude	Data.			
IA2 Phase Angle	Data			
IB2 Magnitude	Data.			
IB2 Phase Angle	Data.			
IC2 Magnitude	Data.			
IC2 Phase Angle	Data			
IA Differential	Data.			
IB Differential	Data			
IC Differential	Data.			
IA Bias	Data.			
IB Bias	Data.			
IC Bias	Data.			

Table 8: List of Measurement 1 menu

1.4.9 Measurements 2

This menu provides measurement information.

Menu text	Default setting	Setting range		Step size
		Min.	Max.	
MEASUREMENTS 2				
3 Phase Watts	Data.			
3 Phase VARs	Data.			
3 Phase VA	Data.			
Zero Seq power	Data.			
3Ph Power Factor	Data.			
3Ph WHours Fwd	Data.			
3Ph WHours Rev	Data.			
3Ph VArHours Fwd	Data.			
3Ph VArHours Rev	Data.			
Reset Energies	No	Yes/No		
3Ph W Fix Demand	Data.			
3Ph VAr Fix Demand	Data.			
3Ph W Peak Dem	Data.			
3Ph VAr Peak Dem	Data.			
Reset Demand	No	No, Yes		
Reset demand measurements command. Can be used to reset the fixed and peak demand value measurements to 0.				
3 Ph I Maximum	Data			
3Ph V Maximum	Data			
Reset Max I/V	No	No, Yes		

Table 9: List of Measurement 2 menu

MR

1.4.10 Measurements 3 (product specific measurements)

This menu provides measurement information.

Menu text	Default setting	Setting range		Step size
		Min.	Max.	
MEASUREMENTS 3				
Thermal Load	Data: - If Thermal Function is enabled			
Thermal State	Data: - If Thermal Function is enabled			
Time to Th Trip	Data: - If Thermal Function is enabled			
Reset Th State	No	No/Yes		N/A
RTD#1 Temperature	Data: - If RTD#1 is enabled			
RTD#2-#10 Temperature	Data: - If RTD#2- #10 is enabled			
Nb Hot St. Allow	Data			
Nb Cold St Allow	Data			
Time to Next St	Data			
Emergency Rest	Data			
Last Start Time	Data: - If Function Prolonged Starts is enabled			
Last St Current	Data: - If Function Prolonged Starts is enabled			
Nb of starts	Data: - If Function Prolonged Starts is enabled			
Reset Nb of St	No	No/Yes		N/A
Nb Emergency Rst	Data: - If Function Prolonged Starts is enabled			
Reset Nb Em Rst	No	No/Yes		N/A
Nb Reaccelarat	Data: - If Function Reacceleration is enabled			
Reset Nb Reacc	No	No/Yes		N/A
Reset number of reacceleration command. Resets state to 0				
Motor Run Time	Data.			
Reset Motor Run T	No	No/Yes		N/A
Reset number of motor running hours recorded command. Resets state to 0				
RTD Open Cct	0000000000			
This menu cell displays the status of the ten RTDs as a binary string, 0 = No Open Circuit, 1 = Open Circuit. The Open Cct alarms are latched.				
RTD Short Cct	0000000000			
This menu cell displays the status of the ten RTDs as a binary string, 0 = No Short Circuit, 1 = Short Circuit. The Short Cct alarms are latched.				
RTD Data Error	0000000000			
This menu cell displays the status of the ten RTDs as a binary string, 0 = No Data Error, 1 = Data Error. The Data Error alarms are latched.				
Reset RTD flags	No	No, Yes		N/A
Reset RTD alarms command. Resets latched RTD Open Cct, Short Cct, Data Error alarms.				
Nb Hottest RTD	Data.			
Hottest RTD Temp	Data.			
Reset Max RTD Temp	No	No, Yes		N/A
Reset hottest RTD measurement command. Resets thermal state to 0.				
Analog Input 1	Data. Analog (Current loop/transducer) input 1.			
Analog Input 2	Data. Analog (Current loop/transducer) input 2.			
Analog Input 3	Data. Analog (Current loop/transducer) input 3.			
Analog Input 4	Data. Analog (Current loop/transducer) input 4.			

Table 10: List of Measurement 3 menu

1.4.11 Measurements 4 (product specific measurements)

This menu provides measurement information.

Menu text	Default setting	Setting range		Step size
		Min.	Max.	
MEASUREMENTS 4				
Nb Control Trips	Data: - If CB control is enabled.			
Nb Thermal Trip	Data. - If Thermal Function is enabled			
Nb Trip I> 1	Data: - If Short Circuit Protection is Enabled			
Nb Trip I> 2	Data: - If Short Circuit Protection is Enabled			
Nb Trip ISEF> 1	Data: - If Earth Fault Protection is Enabled			
Nb Trip ISEF> 2	Data: - If Earth Fault Protection is Enabled			
Nb Trip IN> 1	Data: - If Derived Earth Fault Protection is Enabled			
Nb Trip IN> 2	Data: - If Derived Earth Fault Protection is Enabled			
Nb Trip I2>1	Data: - If NPS Protection is enabled			
Nb Trip I2>2	Data: - If NPS Protection is enabled			
Nb Trip PO>	Data: - If Derived Earth Fault Wattmetric Protection is Enabled			
Nb Trip V< 1	Data: - If Undervoltage Protection is enabled			
Nb Trip V< 2	Data: - If Undervoltage Protection is enabled			
Nb Trip F< 1	Data: - If Underfrequency Protection is enabled			
Nb Trip F< 2	Data: - If Underfrequency Protection is enabled			
Nb Trip P< 1	Data: - If Loss of Load Protection is enabled			
Nb Trip P< 2	Data: - If Loss of Load Protection is enabled			
Nb Trip PF< Lead	Data			
Nb Trip PF< Lag	Data			
Nb Trip Rev P	Data: - If Reverse Power Protection is enabled			
Nb Trip V> 1	Data: - If Overvoltage Protection is enabled			
Nb Trip V> 2	Data: - If Overvoltage Protection is enabled			
Nb Trip NVD VN> 1	Data: - If NVD Protection is enabled			
Nb Trip NVD VN> 2	Data:: - If NVD Protection is enabled			
Nb Prolong St	Data: - If Prolonged Start Status enabled			
Nb of Lock Rot-sta	Data: - If Locked Rotor Start<Stall and Prolonged Start enabled			
Nb Lock Rot-run	Data			
Nb Trip RTD#1	Data: - If RTD#1 is enabled			
Nb Trip RTD#2-10	Data: - If RTD#2 - #10 is enabled			
Nb Trip Diff	Data: - If Differential Protection is enabled			
Nb A Input 1 Trip	Data: - If Analogue input 1 enabled			
Nb A Input 2 Trip	Data: - If Analogue input 2 enabled			
Nb A Input 3 Trip	Data: - If Analogue input 3 enabled			
Nb A Input 4 Trip	Data: - If Analogue input 4 enabled			
Nb FFail1 Trip	Data - If Field Failure 1 function enabled			
Nb FFail2 Trip	Data - If Field Failure 2 function enabled			
Nb Trip I> 3	Data - if I>3 enabled			
Nb Trip I> 4	Data - if I>4 enabled			
Reset Trip Stat	No	No, Yes		
Reset Trip counter statistics command. Resets all counters to 0				

Table 11: List of Measurement 4 menu

MR

FIRMWARE DESIGN

FD

Date:	**24th November 2009**
Hardware suffix:	**J (P241) K (P242/P243)**
Software version:	**57**
Connection diagrams:	**10P241xx (xx = 01 to 02)** **10P242xx (xx = 01)** **10P243xx (xx = 01)**

FD

CONTENTS

1	**RELAY SYSTEM OVERVIEW**	**5**
1.1	**Hardware overview**	**5**
1.1.1	Processor board	5
1.1.2	Input module	5
1.1.3	Power supply module	5
1.1.4	RTD board	5
1.1.5	IRIG-B modulated or unmodulated board	5
1.1.6	Second rear comms. board	5
1.1.7	Ethernet board	5
1.2	**Software overview**	**6**
1.2.1	Real-time operating system	7
1.2.2	System services software	7
1.2.3	Platform software	7
1.2.4	Protection & control software	7
1.2.5	Disturbance recorder	7
2	**HARDWARE MODULES**	**8**
2.1	**Processor board**	**8**
2.2	**Internal communication buses**	**8**
2.3	**Input module**	**8**
2.3.1	Transformer board	8
2.3.2	Input board	9
2.3.3	Universal opto isolated logic inputs	10
2.4	**Power supply module (including output relays)**	**10**
2.4.1	Power supply board (including EIA(RS)485 communication interface)	10
2.4.2	Output relay board	11
2.5	**RTD board**	**11**
2.6	**IRIG-B modulated or unmodulated board**	**11**
2.7	**Second rear communications board**	**11**
2.8	**Ethernet board**	**12**
2.9	**Current loop input output board (CLIO)**	**15**
2.10	**Mechanical layout**	**16**
3	**RELAY SOFTWARE**	**18**
3.1	**Real-time operating system**	**18**
3.2	**System services software**	**18**
3.3	**Platform software**	**19**
3.3.1	Record logging	19
3.3.2	Settings database	19
3.3.3	Database interface	19

3.4 Protection and control software 19
3.4.1 Overview - protection and control scheduling 20
3.4.2 Signal processing 20
3.4.3 Frequency response 20
3.4.4 Programmable scheme logic 21
3.4.5 Function key interface (P242/3 only) 22
3.4.6 Event, fault & maintenance recording 22
3.4.7 Disturbance recorder 22

4 SELF TESTING & DIAGNOSTICS 23
4.1 Start-up self-testing 23
4.1.1 System boot 23
4.1.2 Initialization software 23
4.1.3 Platform software initialization & monitoring 24
4.2 Continuous self-testing 24

FIGURES

Figure 1: Relay modules and information flow 6
Figure 2: Main input board 9
Figure 3: Second rear comms. port 12
Figure 4: Single Ethernet board (optional) 14
Figure 5: Redundant Ethernet board connectors 15
Figure 6: Current loop input output board 16
Figure 7: Relay software structure 18
Figure 8: Frequency response 21
Figure 9: Start-up self-testing logic 25
Figure 10: Continuous self-testing logic 26

TABLES

Table 1: Threshold levels 10
Table 2: Power supply options 10

FD

1 RELAY SYSTEM OVERVIEW

1.1 Hardware overview

The relay hardware is based on a modular design whereby the relay is made up of an assemblage of several modules that are drawn from a standard range. Some modules are essential while others are optional depending on the user's requirements.

The different modules that can be present in the relay are as follows:

1.1.1 Processor board

The processor board performs all calculations for the relay and controls the operation of all other modules within the relay. The processor board also contains and controls the user interfaces (LCD, LEDs, keypad and communication interfaces).

1.1.2 Input module

The input module converts the information contained in the analog and digital input signals into a format suitable for processing by the processor board. The standard input module consists of two boards; a transformer board to provide electrical isolation and a main input board which provides analog to digital conversion and the isolated digital inputs.

1.1.3 Power supply module

The power supply module provides a power supply to all of the other modules in the relay, at three different voltage levels. The power supply board also provides the EIA(RS)485 electrical connection for the rear communication port. On a second board the power supply module contains the relays that provide the output contacts.

1.1.4 RTD board

This optional board can be used to process the signals from up to 10 resistance temperature detectors (RTDs) to measure the winding and ambient temperatures.

1.1.5 IRIG-B modulated or unmodulated board

This board, which is optional, can be used where an IRIG-B signal is available to provide an accurate time reference for the relay. There is also an option on this board to specify a fiber optic or Ethernet rear communication port.

All modules are connected by a parallel data and address bus that allows the processor board to send and receive information to and from the other modules as required. There is also a separate serial data bus for conveying sample data from the input module to the processor. Figure 1 shows the modules of the relay and the flow of information between them.

1.1.6 Second rear comms. board

The optional second rear port is designed typically for dial-up modem access by protection engineers/operators, when the main port is reserved for SCADA traffic. Communication is through one of three physical links; K-Bus, EIA(RS)485 or EIA(RS)232. The port supports full local or remote protection and control access by MiCOM S1 Studio software. The second rear port is also available with an on board IRIG-B input.

1.1.7 Ethernet board

This is a mandatory board for IEC 61850 enabled relays. It provides network connectivity through either copper or fiber media at rates of 10 Mb/s (copper only) or 100 Mb/s. There is also an option on this board to specify IRIG-B port (modulated or un-modulated). This board, the IRIG-B board mentioned in section 1.1.5 and second rear comms board mentioned in section 1.1.6 are mutually exclusive as they all utilize slot A within the relay case.

All modules are connected by a parallel data and address bus which allows the processor board to send and receive information to and from the other modules as required.

There is also a separate serial data bus for conveying sample data from the input module to the processor. Figure 1 shows the modules of the relay and the flow of information between them.

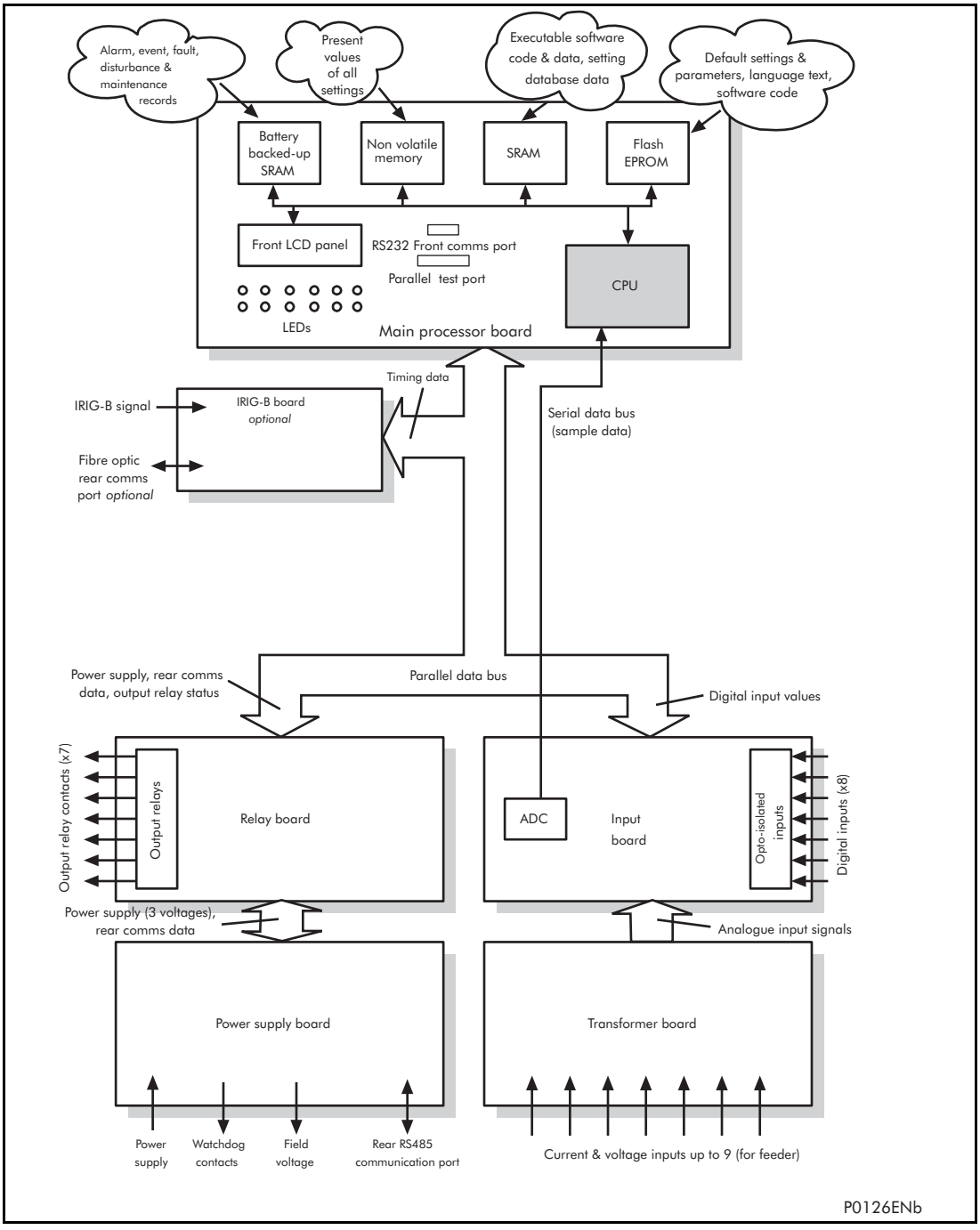

Figure 1: Relay modules and information flow

1.2 Software overview

The software for the relay can be conceptually split into four elements; the real-time operating system, the system services software, the platform software and the protection and control software. These four elements are not distinguishable to the user, and are all processed by the same processor board. The distinction between the four parts of the software is explained in the following sections.

FD

1.2.1 Real-time operating system

The real time operating system is used to provide a framework for the different parts of the relay's software to operate within. To this end the software is split into tasks. The real-time operating system is responsible for scheduling the processing of these tasks such that they are carried out in the time available and in the desired order of priority. The operating system is also responsible for the exchange of information between tasks, in the form of messages.

1.2.2 System services software

The system services software provides the low-level control of the relay hardware. For example, the system services software controls the boot of the relay's software from the non-volatile flash EPROM memory at power-on, and provides driver software for the user interface via the LCD and keypad, and via the serial communication ports. The system services software provides an interface layer between the control of the relay's hardware and the rest of the relay software.

1.2.3 Platform software

The platform software deals with the management of the relay settings, the user interfaces and logging of event, alarm, fault and maintenance records. All of the relay settings are stored in a database within the relay that provides direct compatibility with Courier communications. For all other interfaces (i.e. the front panel keypad and LCD interface, MODBUS and IEC 60870-5-103 and IEC 61850) the platform software converts the information from the database into the format required. The platform software notifies the protection & control software of all settings changes and logs data as specified by the protection & control software.

1.2.4 Protection & control software

The protection and control software performs the calculations for all of the protection algorithms of the relay. This includes digital signal processing such as Fourier filtering and ancillary tasks such as the disturbance recorder. The protection & control software interfaces with the platform software for settings changes and logging of records, and with the system services software for acquisition of sample data and access to output relays and digital opto-isolated inputs.

1.2.5 Disturbance recorder

The analog values and logic signals are routed from the protection and control software to the disturbance recorder software. The platform software interfaces to the disturbance recorder to allow extraction of the stored records.

2 HARDWARE MODULES

The relay is based on a modular hardware design where each module performs a separate function within the relay operation. This section describes the functional operation of the various hardware modules.

2.1 Processor board

The relay is based around a TMS320VC33-150MHz (peak speed), floating point, 32-bit digital signal processor (DSP) operating at a clock frequency of half this speed. This processor performs all of the calculations for the relay, including the protection functions, control of the data communication and user interfaces including the operation of the LCD, keypad and LEDs.

The processor board is located directly behind the relay's front panel that allows the LCD and LEDs to be mounted on the processor board along with the front panel communication ports. These comprise the 9-pin D-connector for EIA(RS)232 serial communications (e.g. using MiCOM S1 Studio and Courier communications) and the 25-pin D-connector relay test port for parallel communication. All serial communication is handled using a field programmable gate array (FPGA).

The memory provided on the main processor board is split into two categories, volatile and non-volatile; the volatile memory is fast access (zero wait state) SRAM which is used for the storage and execution of the processor software, and data storage as required during the processor's calculations. The non-volatile memory is sub-divided into 3 groups; 4 MB of flash memory for non-volatile storage of software code and text, together with default settings; 4 MB of battery backed-up SRAM for the storage of disturbance, event, fault and maintenance record data; and 64 kB of E2PROM memory for the storage of configuration data, including the present setting values.

2.2 Internal communication buses

The relay has two internal buses for the communication of data between different modules. The main bus is a parallel link that is part of a 64-way ribbon cable. The ribbon cable carries the data and address bus signals in addition to control signals and all power supply lines. Operation of the bus is driven by the main processor board that operates as a master while all other modules within the relay are slaves.

The second bus is a serial link that is used exclusively for communicating the digital sample values from the input module to the main processor board. The DSP processor has a built-in serial port that is used to read the sample data from the serial bus. The serial bus is also carried on the 64-way ribbon cable.

2.3 Input module

The input module provides the interface between the relay processor board(s) and the analog and digital signals coming into the relay. The input module of P241/2 consists of two PCBs; the main input board and the transformer board. This relay provides three voltage inputs and four current inputs. The P243 input module contains an additional transformer board, providing a total of 3 voltage inputs and 7 current inputs.

2.3.1 Transformer board

The standard transformer board holds up to four voltage transformers (VTs) and up to five current transformers (CTs). The auxiliary transformer board adds up to four more CTs. The current inputs will accept either 1 A or 5 A nominal current (menu and wiring options) and the voltage inputs are 110 V nominal voltage. The transformers are used both to step-down the currents and voltages to levels appropriate to the relay's electronic circuitry and to provide effective isolation between the relay and the power system. The connection arrangements of both the current and voltage transformer secondary's provide differential input signals to the main input board to reduce noise.

2.3.2 Input board

The main input board is shown as a block diagram in Figure 2. It provides the circuitry for the digital input signals and the analog-to-digital conversion for the analog signals. Hence it takes the differential analog signals from the CTs and VTs on the transformer board(s), converts these to digital samples and transmits the samples to the main processor board via the serial data bus. On the input board the analog signals are passed through an anti-alias filter before being multiplexed into a single analog to digital converter chip. The A-D converter provides 16-bit resolution and a serial data stream output. The digital input signals are opto isolated on this board to prevent excessive voltages on these inputs causing damage to the relay's internal circuitry.

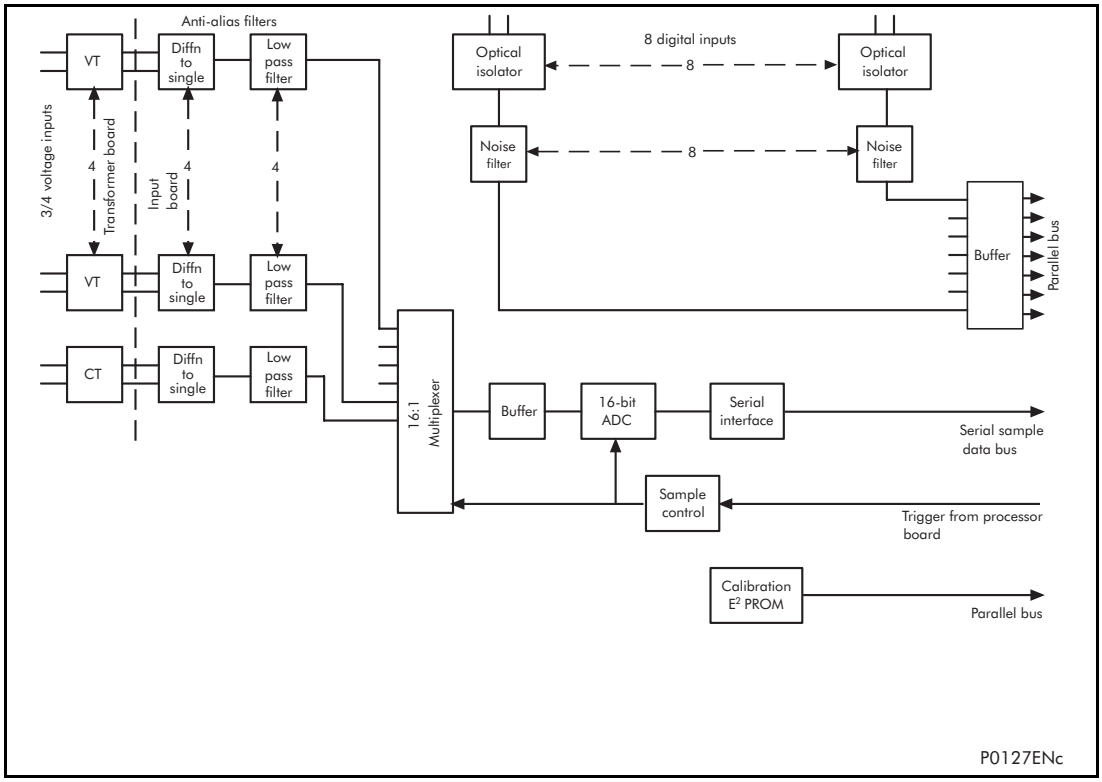

Figure 2: Main input board

The signal multiplexing arrangement provides for 16 analog channels to be sampled. This allows for up to 9 current inputs and 4 voltage inputs to be accommodated. The 3 spare channels are used to sample 3 different reference voltages for the purpose of continually checking the operation of the multiplexer and the accuracy of the A-D converter. The sample rate is maintained at 24 samples per cycle of the power waveform by a logic control circuit that is driven by the frequency tracking function on the main processor board. The calibration non-volatile memory holds the calibration coefficients that are used by the processor board to correct for any amplitude or phase error introduced by the transformers and analog circuitry.

The other function of the input board is to read the state of the signals present on the digital inputs and present this to the parallel data bus for processing. The input board holds 8 optical isolators for the connection of up to eight digital input signals. The opto-isolators are used with the digital signals for the same reason as the transformers with the analog signals; to isolate the relay's electronics from the power system environment. A 48 V 'field voltage' supply is provided at the back of the relay for use in driving the digital opto-inputs. The input board provides some hardware filtering of the digital signals to remove unwanted noise before buffering the signals for reading on the parallel data bus. Depending on the relay model, more than 8 digital input signals can be accepted by the relay. This is achieved by the use of an additional opto-board that contains the same provision for 8 isolated digital inputs as the main input board, but does not contain any of the circuits for analog signals which are provided on the main input board.

2.3.3 Universal opto isolated logic inputs

The P24x series relays are fitted with universal opto isolated logic inputs that can be programmed for the nominal battery voltage of the circuit of which they are a part i.e. thereby allowing different voltages for different circuits e.g. signaling, tripping. From software version C1.0 (40) onwards they can also be programmed as Standard 60% - 80% or 50% - 70% to satisfy different operating constraints.

Threshold levels are as follows:

Nominal battery voltage (Vdc)	Standard 60% - 80%		50% - 70%	
	No operation (logic 0) Vdc	Operation (logic 1) Vdc	No operation (logic 0) Vdc	Operation (logic 1) Vdc
24/27	<16.2	>19.2	<12.0	>16.8
30/34	<20.4	>24.0	<15.0	>21.0
48/54	<32.4	>38.4	<24.0	>33.6
110/125	<75.0	>88.0	<55.0	>77.0
220/250	<150.0	>176.0	<110	>154

Table 1: Threshold levels

This lower value eliminates fleeting pick-ups that may occur during a battery earth fault, when stray capacitance may present up to 50% of battery voltage across an input.

Each input also has selectable filtering which can be utilized. This allows use of a pre-set filter of ½ cycle which renders the input immune to induced noise on the wiring: although this method is secure it can be slow, particularly for intertripping. This can be improved by switching off the ½ cycle filter in which case one of the following methods to reduce ac noise should be considered. The first method is to use double pole switching on the input, the second is to use screened twisted cable on the input circuit.

2.4 Power supply module (including output relays)

The power supply module contains two PCBs, one for the power supply unit itself and the other for the output relays. The power supply board also contains the input and output hardware for the rear communication port which provides an EIA(RS)485 communication interface.

FD

2.4.1 Power supply board (including EIA(RS)485 communication interface)

One of three different configurations of the power supply board can be fitted to the relay. This will be specified at the time of order and depends on the nature of the supply voltage that will be connected to the relay. The three options are shown in table 1 below:

Nominal dc range	Nominal ac range
24/48 V	DC only
48/110 V	30/100 Vrms
110/250 V	100/240 Vrms

Table 2: Power supply options

The output from all versions of the power supply module are used to provide isolated power supply rails to all of the other modules within the relay. Three voltage levels are used within the relay, 5.1 V for all of the digital circuits, ±16 V for the analog electronics, e.g. on the input board, and 22 V for driving the output relay coils and the RTD board if fitted. All power supply voltages including the 0 V earth line are distributed around the relay via the 64-way ribbon cable. One further voltage level is provided by the power supply board that is the field voltage of 48 V. This is brought out to terminals on the back of the relay so that it can be used to drive the optically isolated digital inputs.

The two other functions provided by the power supply board are the EIA(RS)485 communications interface and the watchdog contacts for the relay. The EIA(RS)485 interface is used with the relay's rear communication port to provide communication using one of either Courier, MODBUS, or IEC 60870-5-103 protocols. The EIA(RS)485 hardware supports half-duplex communication and provides optical isolation of the serial data being transmitted and received. All internal communication of data from the power supply board is conducted via the output relay board that is connected to the parallel bus.

The watchdog facility provides two output relay contacts, one normally open and one normally closed that are driven by the main processor board. These are provided to give an indication that the relay is in a healthy state.

The power supply board incorporates inrush current limiting. This limits the peak inrush current, during energization, to approximately 10 A.

2.4.2 Output relay board

There are 2 versions of the output relay board one with seven relays, three normally open contacts and four changeover contacts and one with eight relays, six normally open contacts and two changeover contacts.

For relay models with suffix A hardware, only the 7 output relay boards were available. For equivalent relay models in suffix C hardware or greater the base numbers of output contacts, using the 7 output relay boards, is being maintained for compatibility. The 8 output relay board is only used for new relay models or existing relay models available in new case sizes or to provide additional output contacts to existing models for suffix issue C or greater hardware.

Note: The model number suffix letter refers to the hardware version.

The relays are driven from the 22 V power supply line. The relays' state is written to or read from using the parallel data bus. Depending on the relay model, more than seven output contacts may be provided, through the use of up to three extra relay boards. Each additional relay board provides a further seven or eight output relays.

2.5 RTD board

The RTD (Resistance Temperature Detector) board is an order option. It is used to monitor the temperature readings from up to ten PT100 RTDs that are each connected using a 3-wire connection. The board is powered from the 22 V power rail that is used to drive the output relays. The RTD board includes two redundant channels that are connected to high stability resistors to provide reference readings. These are used to check the operation of the RTD board. The temperature data is read by the processor via the parallel data bus, and is used to provide thermal protection of the generator windings.

2.6 IRIG-B modulated or unmodulated board

The IRIG-B board is an order option that can be fitted to provide an accurate timing reference for the relay. This can be used wherever an IRIG-B signal is available. The

IRIG-B signal is connected to the board via a BNC connector on the back of the relay. The timing information is used to synchronize the relay's internal real-time clock to an accuracy of 1 ms. The internal clock is then used for the time tagging of the event, fault maintenance and disturbance records.

The IRIG-B board can also be specified with a fiber optic transmitter/receiver that can be used for the rear communication port instead of the EIA(RS)485 electrical connection or Ethernet rear communication port.

2.7 Second rear communications board

For relays with Courier, MODBUS, or IEC 60870-5-103 protocol on the first rear communications port there is the hardware option of a second rear communications port, which will run the Courier language. This can be used over one of three physical links: twisted pair K-Bus (non-polarity sensitive), twisted pair EIA(RS)485 (connection polarity sensitive) or EIA(RS)232.

The second rear comms. board Ethernet and IRIG-B boards are mutually exclusive since they use the same hardware slot. For this reason two versions of second rear comms. and Ethernet boards are available; one with an IRIG-B input and one without. The physical layout of the second rear comms. board is shown in Figure 3.

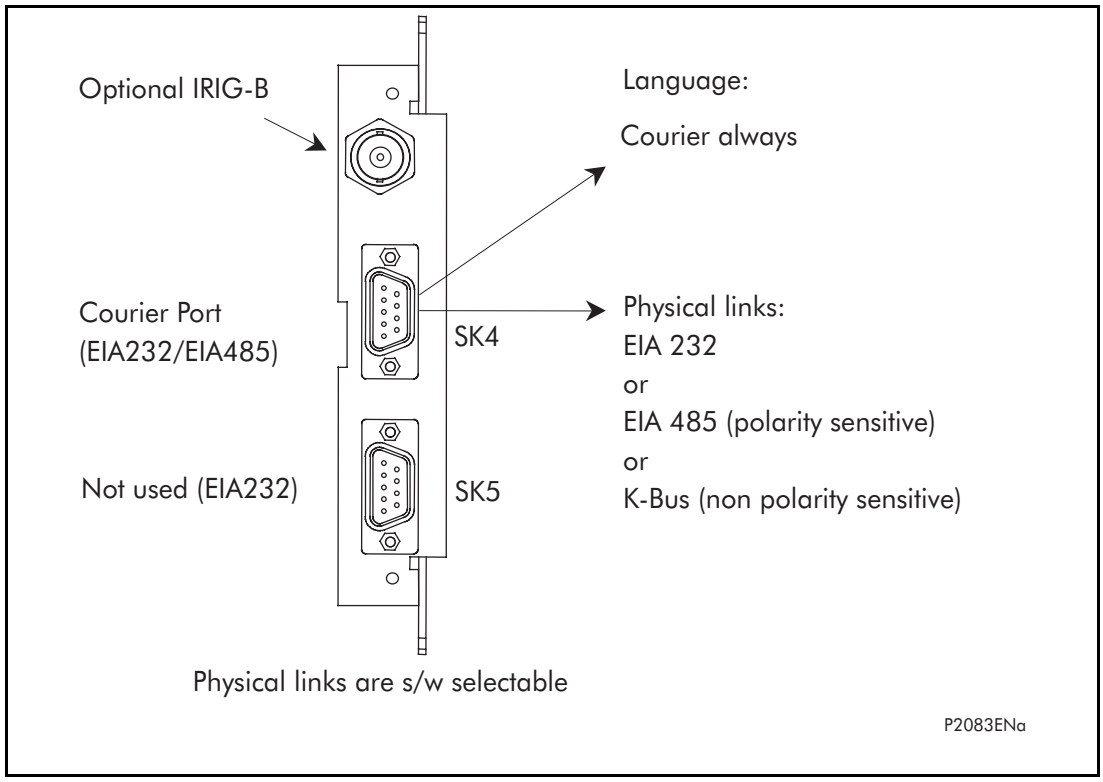

Figure 3: Second rear comms. port

2.8 Ethernet board

FD

For IEC 61850 over Ethernet two boards are available, the single Ethernet board (ZN0049) and the redundant Ethernet board (ZN0071). Both are required for communications but the redundant Ethernet board allows an alternative path to be always available, providing bumpless redundancy

The optional single Ethernet board (ZN0049) has 3 variants which support the IEC 61850 implementation:

- 100 Mbits/s Fiber Optic + 10/100 Mbits/s Copper
- 100 Mbits/s Fiber Optic + 10/100 Mbits/s Copper + modulated IRIG-B
- 100 Mbits/s Fiber Optic + 10/100 Mbits/s Copper + un-modulated IRIG-B

This card is fitted into Slot A of the relay, which is the optional communications slot. Each Ethernet card has a unique MAC address used for Ethernet communications. This is printed on the rear of the card, alongside the Ethernet sockets.

The 100 Mbits/s Fiber Optic ports use ST® type connectors and are suitable for 1300 nm multi-mode fiber type.

Copper ports use RJ45 type connectors. When using copper Ethernet, it is important to use Shielded Twisted Pair (STP) or Foil Twisted Pair (FTP) cables, to shield the IEC 61850 communications against electromagnetic interference. The RJ45 connector at each end of the cable must be shielded, and the cable shield must be connected to this RJ45 connector shield, so that the shield is grounded to the relay case. Both the cable and the RJ45 connector at each end of the cable must be Category 5 minimum, as specified by the IEC 61850 standard. It is recommended that each copper Ethernet cable is limited to a maximum length of 3 meters and confined within one bay/cubicle.

When using IEC 61850 communications through the Ethernet card, the rear EIA(RS)485 and front EIA(RS)232 ports are also available for simultaneous use, both using the Courier protocol.

Industrial network failure can be disastrous. Redundancy provides increased security and reliability, but also devices can be added to or removed from the network without network downtime.

The following list shows Schneider Electric's implementation of Ethernet redundancy, which has six variants with embedded IEC 61850 over Ethernet, plus SHP, RSTP and DHP redundancy protocols.

- Self Healing Protocol (SHP) with 1300 nm multi mode 100BaseFx fiber optic Ethernet ports (ST® connector) and modulated IRIG-B input.
- Self Healing Protocol (SHP) with 1300 nm multi mode 100BaseFx fiber optic Ethernet ports (ST® connector) and unmodulated IRIG-B input.

  Note: Both of these boards offer compatibility with C264-SWR202 and MiCOM H35x multi-mode switches. Self Healing Protocol is a Schneider Electric solution providing extremely fast recovery time.

- Rapid Spanning Tree Protocol (RSTP IEEE 802.1D 2004) with 1300 nm multi mode 100BaseFx fiber optic Ethernet ports (ST® connector) and modulated IRIG-B input.
- Rapid Spanning Tree Protocol (RSTP IEEE 802.1D 2004) with 1300 nm multi mode 100BaseFx fiber optic Ethernet ports (ST® connector) and unmodulated IRIG-B input.

  Note: Both of these boards offer the RSTP protocol.

- Dual Homing Protocol (DHP) with 1300 nm multi mode 100BaseFx fiber optic Ethernet ports (ST® connector) and modulated IRIG-B input.
- Dual Homing Protocol (DHP) with 1300 nm multi mode 100BaseFx fiber optic Ethernet ports (ST® connector) and unmodulated IRIG-B input.

  Note: Both of these boards offer compatibility with C264-SWD202 and H36x multi-mode switches. Dual Homing Protocol is a Schneider Electric solution providing bumpless redundancy to the IED.

The redundant Ethernet board is fitted into Slot A of the IED, which is the optional communications slot. Each Ethernet board has two MAC addresses, one for the managed embedded switch and one for the IED. The MAC address of the IED is printed on the rear panel of the IED. See the Redundant Ethernet Board User Guide, Px4x/EN REB for more information on redundant Ethernet communications.

The physical layouts of the single and redundant Ethernet boards are shown in Figure 4 and figure 5 respectively.

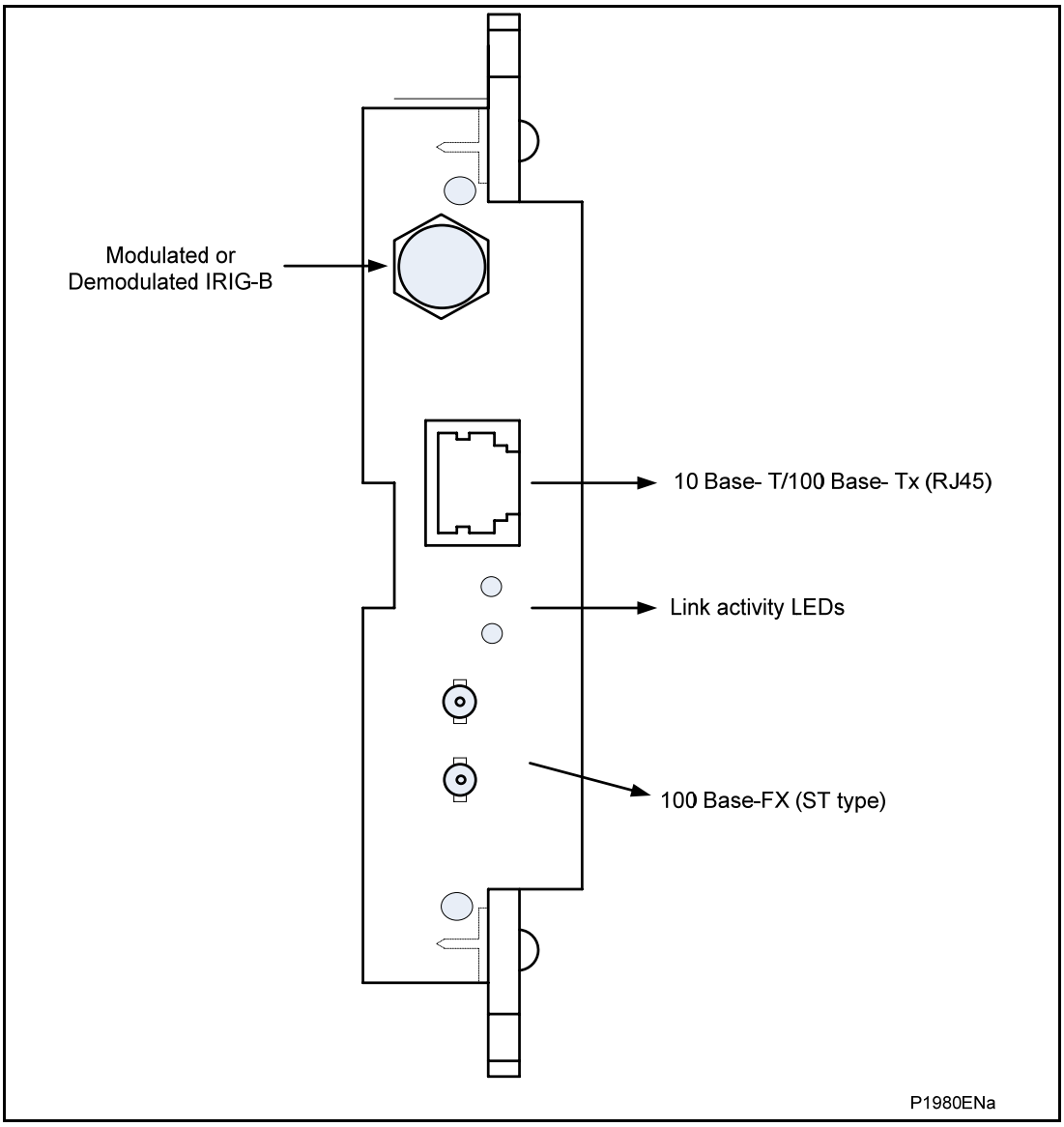

Figure 4: Single Ethernet board (optional)

FD

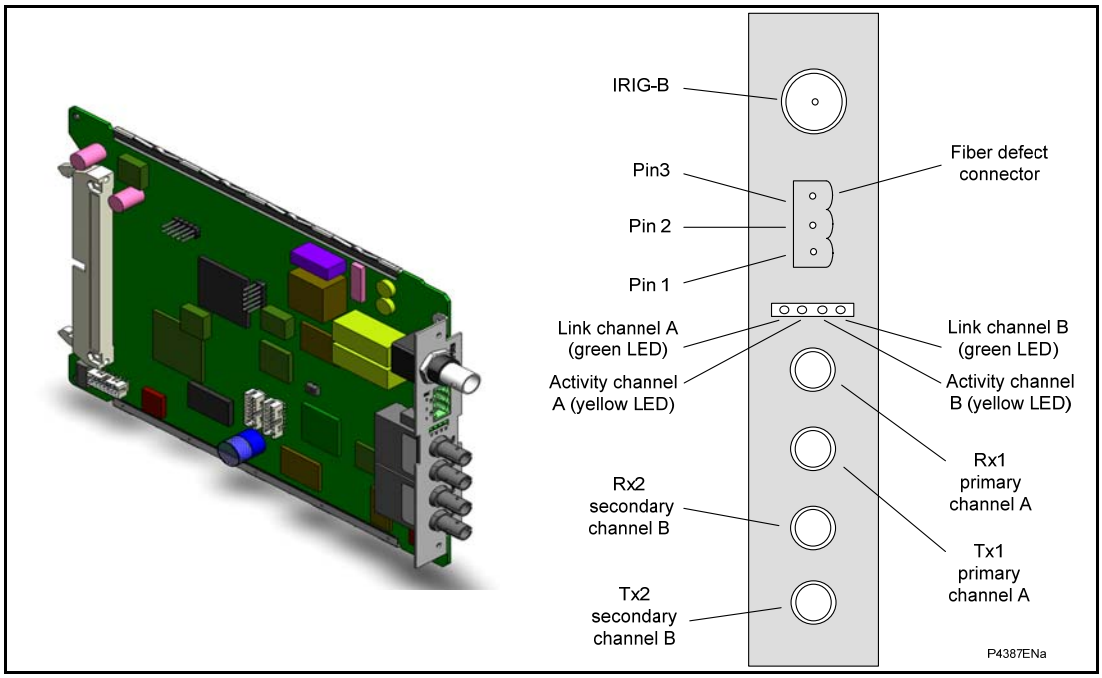

Figure 5: Redundant Ethernet board connectors

2.9 Current loop input output board (CLIO)

The current loop input output (CLIO) board is an order option. The CLIO board is powered from the 22 V power rail that is used to drive the output relays.

Four analog (or current loop) inputs are provided for transducers with ranges of 0 - 1 mA, 0 - 10 mA, 0 - 20 mA or 4 - 20 mA. The input current data is read by the processor via the parallel data bus, and is used to provide measurements from various transducers such as vibration monitors, tachometers and pressure transducers.

For each of the four current loop inputs there are two separate input circuits, 0 - 1 mA and 0 - 20 mA (which is also used for 0 - 10 mA and 4 - 20 mA transducer inputs). The anti-alias filters have a nominal cut-off frequency (3 dB point) of 23 Hz to reduce power system interference from the incoming signals. Four analog current outputs are provided with ranges of 0 - 1 mA, 0 - 10 mA, 0 - 20 mA or 4 - 20 mA which can alleviate the need for separate transducers. These may be used to feed standard moving coil ammeters for analog indication of certain measured quantities or into a SCADA using an existing analog RTU.

Each of the four current loop outputs provides one 0 - 1 mA output, one 0 - 20 mA output and one common return. Suitable software scaling of the value written to the board allows the 0 - 20 mA output to also provide 0 - 10 mA and 4 - 20 mA. Screened leads are recommended for use on the current loop output circuits. The refresh interval for the outputs is nominally 200 ms.

All external connections to the current loop I/O board are made via the same 15 way light duty I/O connector SL3.5/15/90F used on the RTD board. Two such connectors are used, one for the current loop outputs and one for the current loop inputs.

The I/O connectors accommodate wire sizes in the range 1/0.85 mm (0.57 mm2) to 1/1.38 mm (1.5 mm2) and their multiple conductor equivalents. The use of screened cable is recommended. The screen terminations should be connected to the case earth of the relay.

Basic Insulation (300 V) is provided between analog inputs/outputs and earth and between analog inputs and outputs. However, there is no insulation between one input and another or one output and another.

Connection	IO blocks	Connection
Outputs	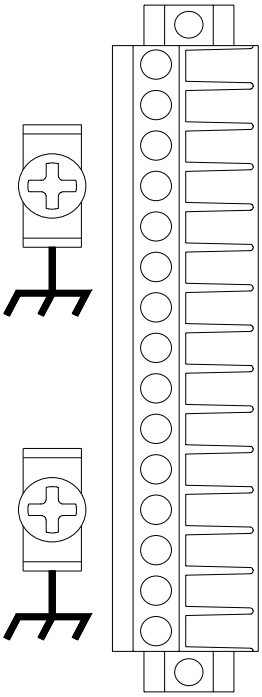	
		0 - 10/0 - 20/4 - 20 mA channel 1
Screen channel 1		0 - 1 mA channel 1
		Common return channel 1
Screen channel 2		0 - 10/0 - 20/4 - 20 mA channel 2
		0 - 1 mA channel 2
		Common return channel 2
Screen channel 3		
		0 - 10/0 - 20/4 - 20 mA channel 3
		0 - 1 mA channel 3
Screen channel 4		Common return channel 3
		0 - 10/0 - 20/4 - 20 mA channel 4
		0 - 1 mA channel 4
		Common return channel 4
Inputs	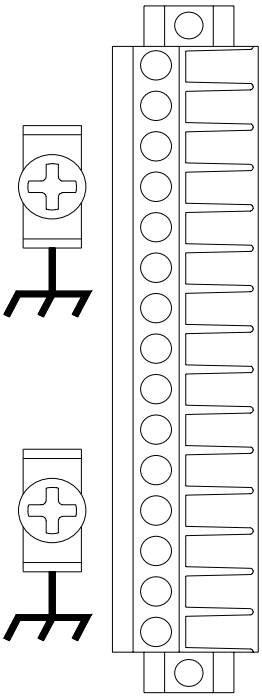	
		0 - 10/0 - 20/4 - 20 mA channel 1
Screen channel 1		0 - 1 mA channel 1
		Common channel 1
Screen channel 2		0 - 10/0 - 20/4 - 20 mA channel 2
		0 - 1 mA channel 2
		Common channel 2
Screen channel 3		
		0 - 10/0 - 20/4 - 20 mA channel 3
		0 - 1 mA channel 3
Screen channel 4		Common channel 3
		0 - 10/0 - 20/4 - 20 mA channel 4
		0 - 1 mA channel 4
		Common channel 4

Figure 6: Current loop input output board

2.10 Mechanical layout

The case materials of the relay are constructed from pre-finished steel that has a conductive covering of aluminum and zinc. This provides good earthing at all joints giving a low impedance path to earth that is essential for performance in the presence of external noise. The boards and modules use a multi-point earthing strategy to improve the immunity to external noise and minimize the effect of circuit noise. Ground planes are used on boards to reduce impedance paths and spring clips are used to ground the module metalwork.

FD

Heavy duty terminal blocks are used at the rear of the relay for the current and voltage signal connections. Medium duty terminal blocks are used for the digital logic input signals, the output relay contacts, the power supply and the rear communication port. A BNC connector is used for the optional IRIG-B signal. 9-pin and 25-pin female D-connectors are used at the front of the relay for data communication.

Inside the relay the PCBs plug into the connector blocks at the rear, and can be removed from the front of the relay only. The connector blocks to the relay's CT inputs are provided with internal shorting links inside the relay which will automatically short the current transformer circuits before they are broken when the board is removed.

The front panel consists of a membrane keypad with tactile dome keys, an LCD and 12 LEDs mounted on an aluminum backing plate.

3 RELAY SOFTWARE

The relay software was introduced in the overview of the relay at the start of this section. The software can be considered to be made up of four sections:

- The real-time operating system
- The system services software
- The platform software
- The protection & control software

This section describes in detail the latter two of these, the platform software and the protection & control software, which between them control the functional behavior of the relay. Figure 7 shows the structure of the relay software.

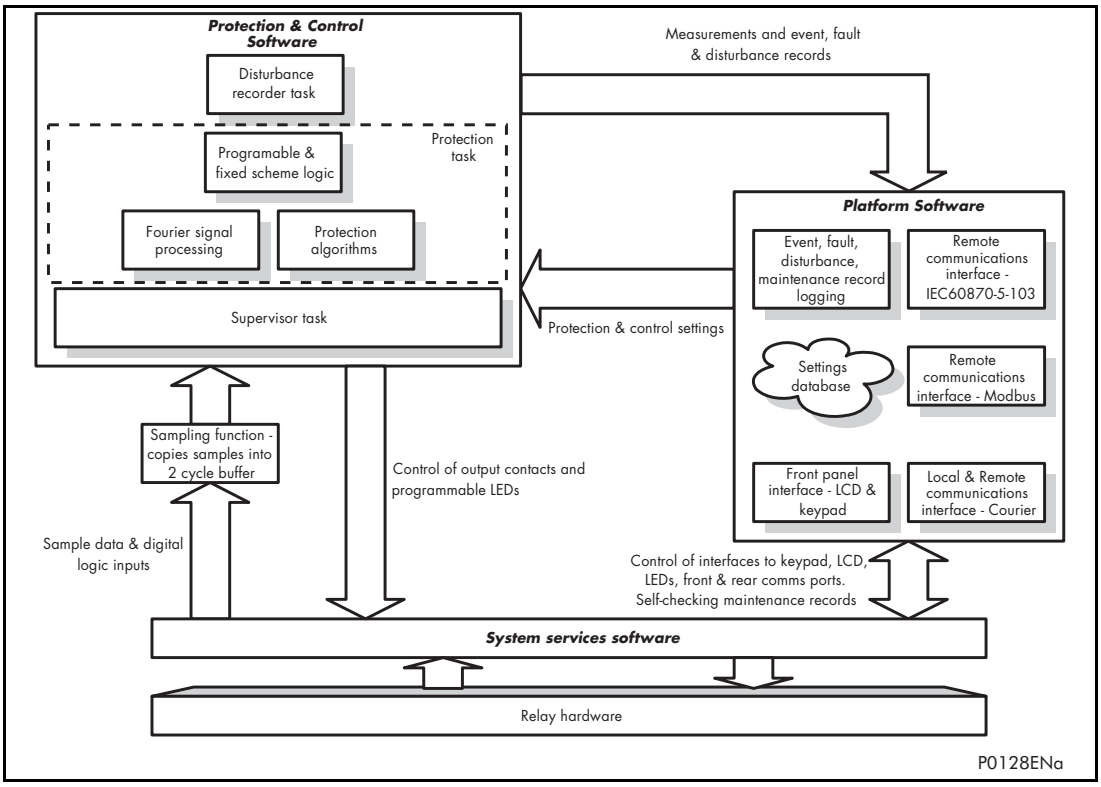

Figure 7: Relay software structure

3.1 Real-time operating system

The software is split into tasks; the real-time operating system is used to schedule the processing of the tasks to ensure that they are processed in the time available and in the desired order of priority. The operating system is also responsible in part for controlling the communication between the software tasks through the use of operating system messages.

3.2 System services software

In Figure 7 the system services software provides the interface between the relay's hardware and the higher-level functionality of the platform software and the protection & control software. For example, the system services software provides drivers for items such as the LCD display, the keypad and the remote communication ports, and controls the boot of the processor and downloading of the processor code into SRAM from non-volatile flash EPROM at power up.

FD

3.3 Platform software

The platform software has three main functions:

- To control the logging of all records that are generated by the protection software, including alarms and event, fault, disturbance and maintenance records.
- To store and maintain a database of all of the relay's settings in non-volatile memory.
- To provide the internal interface between the settings database and each of the relay's user interfaces, i.e. the front panel interface and the front and rear communication ports, using whichever communication protocol has been specified (Courier, MODBUS and IEC 60870-5-103).

3.3.1 Record logging

The logging function is provided to store all alarms, events, faults and maintenance records. The records for all of these incidents are logged in battery backed-up SRAM in order to provide a non-volatile log of what has happened. The relay maintains four logs: one each for up to 32 alarms, 250 event records, 5 fault records and 5 maintenance records. The logs are maintained such that the oldest record is overwritten with the newest record. The logging function can be initiated from the protection software or the platform software.

The logging function can be initiated from the protection software or the platform software is responsible for logging of a maintenance record in the event of a relay failure. This includes errors that have been detected by the platform software itself or error that are detected by either the system services or the protection software functions. See also the section on supervision and diagnostics later in this chapter.

3.3.2 Settings database

The settings database contains all of the settings and data for the relay, including the protection, disturbance recorder and control & support settings. The settings are maintained in non-volatile memory. The platform software's management of the settings database includes the responsibility of ensuring that only one user interface modifies the settings of the database at any one time. This feature is employed to avoid confusion between different parts of the software during a setting change. For changes to protection settings and disturbance recorder settings, the platform software operates a 'scratchpad' in SRAM memory. This allows a number of setting changes to be made in any order but applied to the protection elements, disturbance recorder and saved in the database in non-volatile memory, at the same time (see Introduction, *P24x/EN IT* chapter on the user interface). If a setting change affects the protection & control task, the database advises it of the new values.

3.3.3 Database interface

The other function of the platform software is to implement the relay's internal interface between the database and each of the relay's user interfaces. The database of settings and measurements must be accessible from all of the relay's user interfaces to allow read and modify operations. The platform software presents the data in the appropriate format for each user interface.

3.4 Protection and control software

The protection and control software task is responsible for processing all of the protection elements and measurement functions of the relay. To achieve this it has to communicate with both the system services software and the platform software as well as organize its own operations. The protection software has the highest priority of any of the software tasks in the relay in order to provide the fastest possible protection response. The protection & control software has a supervisor task that controls the start-up of the task and deals with the exchange of messages between the task and the platform software.

3.4.1 Overview - protection and control scheduling

After initialization at start-up, the protection & control task is suspended until there are sufficient samples available for it to process. The acquisition of samples is controlled by a 'sampling function' which is called by the system services software and takes each set of new samples from the input module and stores them in a two-cycle buffer. The protection & control software resumes execution when the number of unprocessed samples in the buffer reaches a certain number. For the P24x motor protection relays, the protection task is executed four times per cycle, i.e. after every 2 samples for the sample rate of 24 samples per power cycle used by the relay. However, the protection elements are split into groups so that different elements are processed each time, with every element being processed at least once per cycle. The protection and control software is suspended again when all of its processing on a set of samples is complete. This allows operations by other software tasks to take place.

3.4.2 Signal processing

The sampling function provides filtering of the digital input signals from the opto-isolators and frequency tracking of the analog signals. The digital inputs are checked against their previous value over a period of half a cycle. Hence a change in the state of one of the inputs must be maintained over at least half a cycle before it is registered with the protection & control software.

The frequency tracking of the analog input signals is achieved by a recursive Fourier algorithm which is applied to one of the input signals, and works by detecting a change in the measured signal's phase angle. The calculated value of the frequency is used to modify the sample rate being used by the input module so as to achieve a constant sample rate of 24 samples per cycle of the power waveform. The value of the frequency is also stored for use by the protection & control task.

When the protection & control task is re-started by the sampling function, it calculates the Fourier components for the analog signals. The Fourier components are calculated using a one-cycle, 24-sample Discrete Fourier Transform (DFT). The DFT is always calculated using the last cycle of samples from the 2-cycle buffer, i.e. the most recent data is used. The DFT used in this way extracts the power frequency fundamental component from the signal and produces the magnitude and phase angle of the fundamental in rectangular component format. The DFT provides an accurate measurement of the fundamental frequency component, and effective filtering of harmonic frequencies and noise. This performance is achieved in conjunction with the relay input module which provides hardware anti-alias filtering to attenuate frequencies above the half sample rate, and frequency tracking to maintain a sample rate of 24 samples per cycle. The Fourier components of the input current and voltage signals are stored in memory so that they can be accessed by all of the protection elements' algorithms. The samples from the input module are also used in an unprocessed form by the disturbance recorder for waveform recording and to calculate true rms values of current, voltage and power for metering purposes.

3.4.3 Frequency response

With the exception of the RMS measurements all other measurements and protection functions are based on the Fourier derived fundamental component. The fundamental component is extracted by using a 24 sample Discrete Fourier Transform (DFT). This gives good harmonic rejection for frequencies up to the 23rd harmonic. The 23rd is the first predominant harmonic that is not attenuated by the Fourier filter and this is known as an 'Alias'. However, the Alias is attenuated by approximately 85% by an additional, analog, 'anti-aliasing' filter (low pass filter). The combined affect of the anti-aliasing and Fourier filters is shown below:

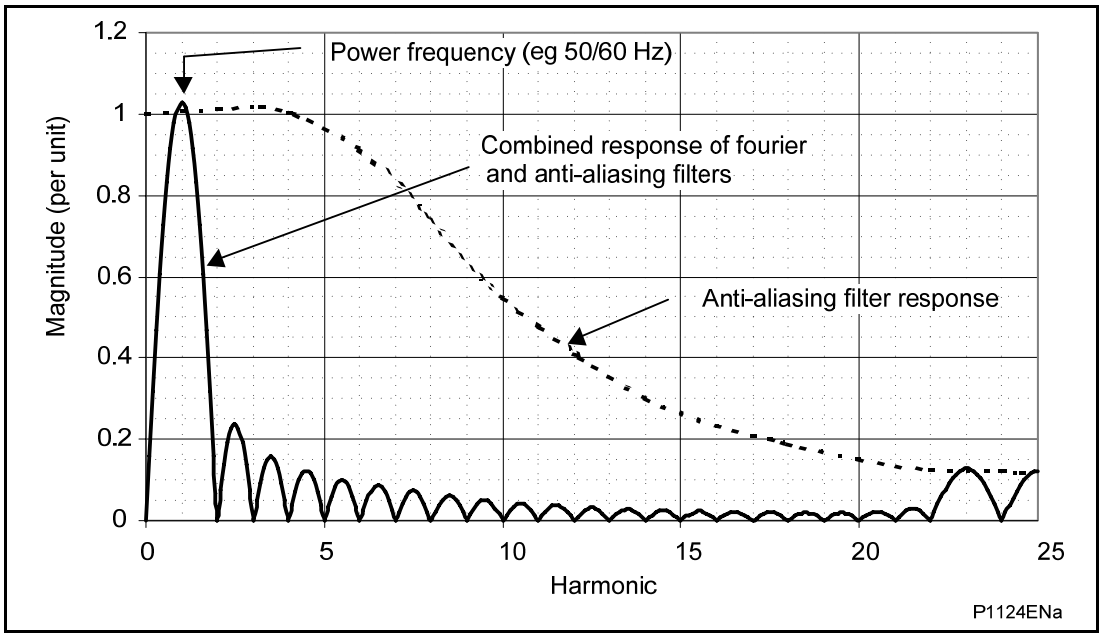

Figure 8: Frequency response

For power frequencies that are not equal to the selected rated frequency the harmonics would not be attenuated to zero amplitude. For small deviations of ±1 Hz, this is not a problem but to allow for larger deviations, an improvement is obtained by the addition of frequency tracking.

With frequency tracking the sampling rate of the analog/digital conversion is automatically adjusted to match the applied signal. In the absence of a suitable signal to amplitude track, the sample rate defaults to the selected rated frequency (Fn). In the presence of a signal within the tracking range (40 to 70 Hz), the relay will lock on to the signal and the measured frequency will coincide with the power frequency as labeled in the diagram above. The resulting outputs for harmonics up to the 23rd will be zero. The relay will frequency track off any voltage or current in the order VA/VB/VC/IA/IB/IC down to 10% Vn for voltage and 5%In for current.

FD

3.4.4 Programmable scheme logic

The purpose of the programmable scheme logic (PSL) is to allow the relay user to configure an individual protection scheme to suit their own particular application. This is achieved through the use of programmable logic gates and delay timers.

The input to the PSL is any combination of the status of the digital input signals from the opto-isolators on the input board, the outputs of the protection elements, e.g. protection starts and trips, and the outputs of the fixed protection scheme logic. The fixed scheme logic provides the relay's standard protection schemes. The PSL itself consists of software logic gates and timers. The logic gates can be programmed to perform a range of different logic functions and can accept any number of inputs. The timers are used either to create a programmable delay, and/or to condition the logic outputs, e.g. to create a pulse of fixed duration on the output regardless of the length of the pulse on the input. The outputs of the PSL are the LEDs on the front panel of the relay and the output contacts at the rear.

The execution of the PSL logic is event driven; the logic is processed whenever any of its inputs change, for example as a result of a change in one of the digital input signals or a trip output from a protection element. Also, only the part of the PSL logic that is affected by the particular input change that has occurred is processed. This reduces the amount of processing time that is used by the PSL. The protection & control software updates the logic delay timers and checks for a change in the PSL input signals every time it runs.

This system provides flexibility for the user to create their own scheme logic design. However, it also means that the PSL can be configured into a very complex system, and because of this setting of the PSL is implemented through the PC support package MiCOM S1 Studio.

3.4.5 Function key interface (P242/3 only)

The ten function keys interface directly into the PSL as digital input signals and are processed based on the PSL's event driven execution. However, a change of state is only recognized when a key press is executed on average for longer than 200 ms. The time to register a change of state, depends on whether the function key press is executed at the start or the end of a protection task cycle, with the additional hardware and software scan time included. A function key press can provide a latched (toggled mode) or output on key press only (normal mode) depending on how it is programmed and can be configured to individual protection scheme requirements. The latched state signal for each function key is written to non-volatile memory and read from non-volatile memory during relay power up therefore allowing the function key state to be reinstated after power-up should relay power be inadvertently lost.

3.4.6 Event, fault & maintenance recording

A change in any digital input signal or protection element output signal is used to indicate that an event has taken place. When this happens, the protection & control task sends a message to the supervisor task to indicate that an event is available to be processed and writes the event data to a fast buffer in SRAM that is controlled by the supervisor task. When the supervisor task receives either an event or fault record message, it instructs the platform software to create the appropriate log in battery backed-up SRAM. The operation of the record logging to battery backed-up SRAM is slower than the supervisor's buffer. This means that the protection software is not delayed waiting for the records to be logged by the platform software. However, in the rare case when a large number of records to be logged are created in a short period of time, it is possible that some will be lost, if the supervisor's buffer is full before the platform software is able to create a new log in battery backed-up SRAM. If this occurs then an event is logged to indicate this loss of information.

Maintenance records are created in a similar manner with the supervisor task instructing the platform software to log a record when it receives a maintenance record message. However, it is possible that a maintenance record may be triggered by a fatal error in the relay in which case it may not be possible to successfully store a maintenance record, depending on the nature of the problem. See also the section on self supervision & diagnostics later in this chapter.

3.4.7 Disturbance recorder

The disturbance recorder operates as a separate task from the protection and control task. It can record the waveforms for up to 8 analog channels and the values of up to 32 digital signals. The recording time is user selectable up to a maximum of 10 seconds. The disturbance recorder is supplied with data by the protection and control task once per cycle. The disturbance recorder collates the data that it receives into the required length disturbance record. The disturbance records can be extracted by MiCOM S1 Studio that can also store the data in COMTRADE format, thus allowing the use of other packages to view the recorded data.

4 SELF TESTING & DIAGNOSTICS

The relay includes a number of self-monitoring functions to check the operation of its hardware and software when it is in service. These are included so that if an error or fault occurs within the relay's hardware or software, the relay is able to detect and report the problem and attempt to resolve it by performing a re-boot. This involves the relay being out of service for a short period of time which is indicated by the 'Healthy' LED on the front of the relay being extinguished and the watchdog contact at the rear operating. If the restart fails to resolve the problem, then the relay will take itself permanently out of service. Again this will be indicated by the LED and watchdog contact.

If a problem is detected by the self-monitoring functions, the relay attempts to store a maintenance record in battery backed-up SRAM to allow the nature of the problem to be notified to the user.

The self-monitoring is implemented in two stages: firstly a thorough diagnostic check that is performed when the relay is booted-up, e.g. at power-on, and secondly a continuous

self-checking operation that checks the operation of the relay's critical functions whilst it is in service.

4.1 Start-up self-testing

The self-testing that is carried out when the relay is started takes a few seconds to complete, during which time the relay's protection is unavailable. This is signaled by the 'Healthy' LED on the front of the relay that will illuminate when the relay has passed all of the tests and entered operation. If the testing detects a problem, the relay will remain out of service until it is manually restored to working order.

The operations that are performed at start-up are as follows:

4.1.1 System boot

The integrity of the flash EPROM memory is verified using a checksum before the program code and data stored in it is copied into SRAM to be used for execution by the processor. When the copy has been completed the data then held in SRAM is compared to that in the flash EPROM to ensure that the two are the same and that no errors have occurred in the transfer of data from flash EPROM to SRAM. The entry point of the software code in SRAM is then called which is the relay initialization code.

FD

4.1.2 Initialization software

The initialization process includes the operations of initializing the processor registers and interrupts, starting the watchdog timers (used by the hardware to determine whether the software is still running), starting the real-time operating system and creating and starting the supervisor task. In the course of the initialization process the relay checks:

- The status of the battery
- The integrity of the battery backed-up SRAM that is used to store event, fault and disturbance records
- The voltage level of the field voltage supply that is used to drive the opto-isolated inputs
- The operation of the LCD controller
- The watchdog operation

At the conclusion of the initialization software the supervisor task begins the process of starting the platform software.

4.1.3 Platform software initialization & monitoring

In starting the platform software, the relay checks the integrity of the data held in non-volatile memory with a checksum, the operation of the real-time clock, and the IRIG-B, RTD and CLIO board if fitted. The final test that is made concerns the input and output of data; the presence and healthy condition of the input board is checked and the analog data acquisition system is checked through sampling the reference voltage.

At the successful conclusion of all of these tests the relay is entered into service and the protection started-up.

4.2 Continuous self-testing

When the relay is in service, it continually checks the operation of the critical parts of its hardware and software. The checking is carried out by the system services software (see section on relay software earlier in this section) and the results reported to the platform software. The functions that are checked are as follows:

- The flash EPROM containing all program code and language text is verified by a checksum
- The code and constant data held in SRAM is checked against the corresponding data in flash EPROM to check for data corruption
- The SRAM containing all data other than the code and constant data is verified with a checksum
- The non-volatile memory containing setting values is verified by a checksum, whenever its data is accessed
- The battery status
- The level of the field voltage
- The integrity of the digital signal I/O data from the opto-isolated inputs and the relay contacts, is checked by the data acquisition function every time it is executed. The operation of the analog data acquisition system is continuously checked by the acquisition function every time it is executed, by means of sampling the reference voltage on a spare multiplexed channel
- The operation of the RTD board is checked by reading the temperature indicated by the reference resistors on the two spare RTD channels
- The operation of the IRIG-B board is checked, where it is fitted, by the software that reads the time and date from the board
- The correct operation of the CLIO board is checked, where it is fitted
- The operation of the Ethernet board is checked, where it is fitted, by the software on the main processor card. If the Ethernet board fails to respond an alarm is raised and the card is reset in an attempt to resolve the problem

In the unlikely event that one of the checks detects an error within the relay's subsystems, the platform software is notified and it will attempt to log a maintenance record in battery backed-up SRAM. If the problem is with the battery status, the RTD board, CLIO board or the IRIG-B board, the relay will continue in operation. However, for problems detected in any other area the relay will initiate a shutdown and re-boot. This will result in a period of up to 5 seconds when the protection is unavailable, but the complete restart of the relay including all initializations should clear most problems that could occur. As described above, an integral part of the start-up procedure is a thorough diagnostic self-check. If this detects the same problem that caused the relay to restart, i.e. the restart has not cleared the problem, then the relay will take itself permanently out of service. This is indicated by the 'Healthy' LED on the front of the relay, which will extinguish, and the watchdog contact that will operate.

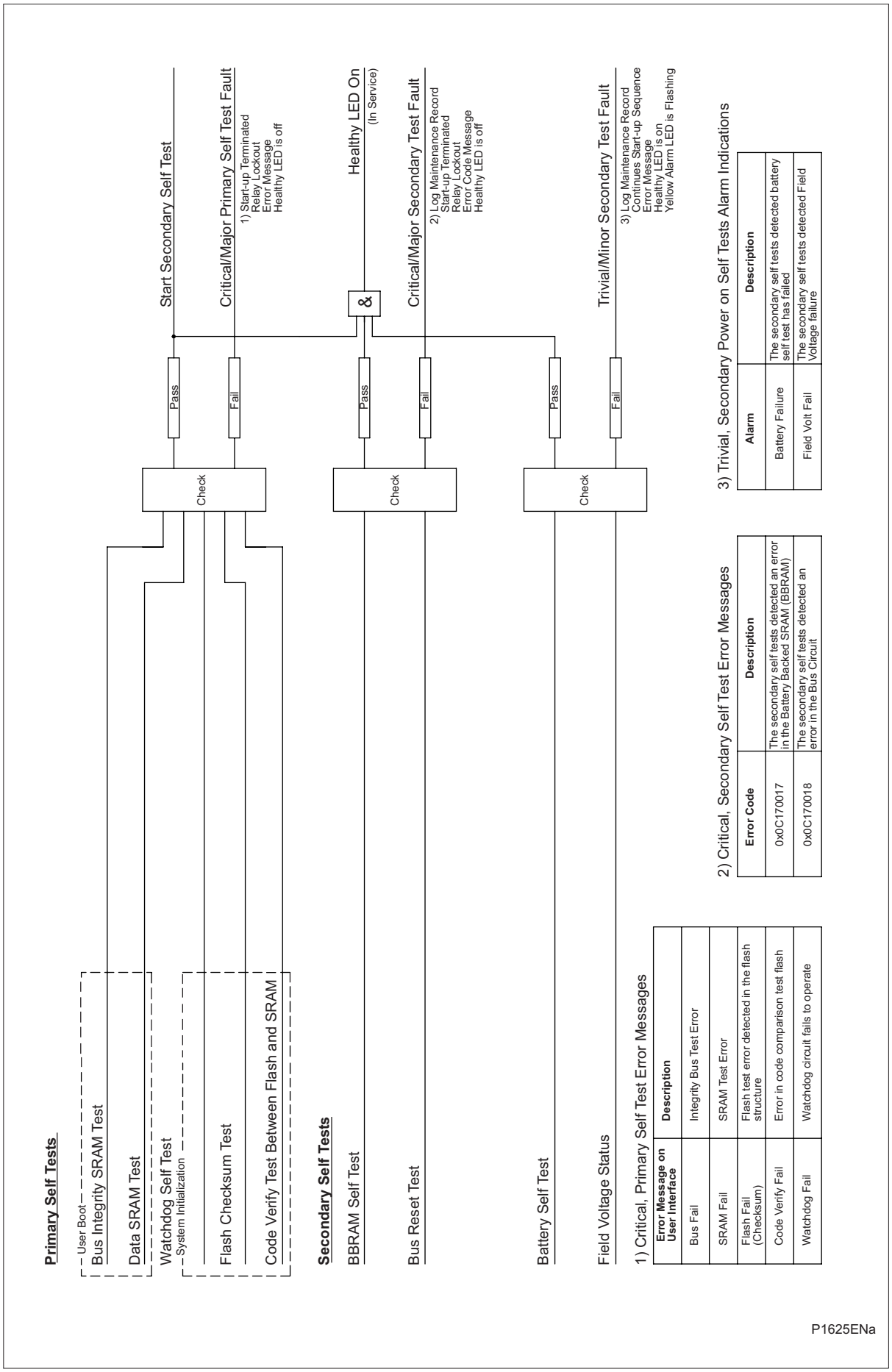

Figure 9: Start-up self-testing logic

FD

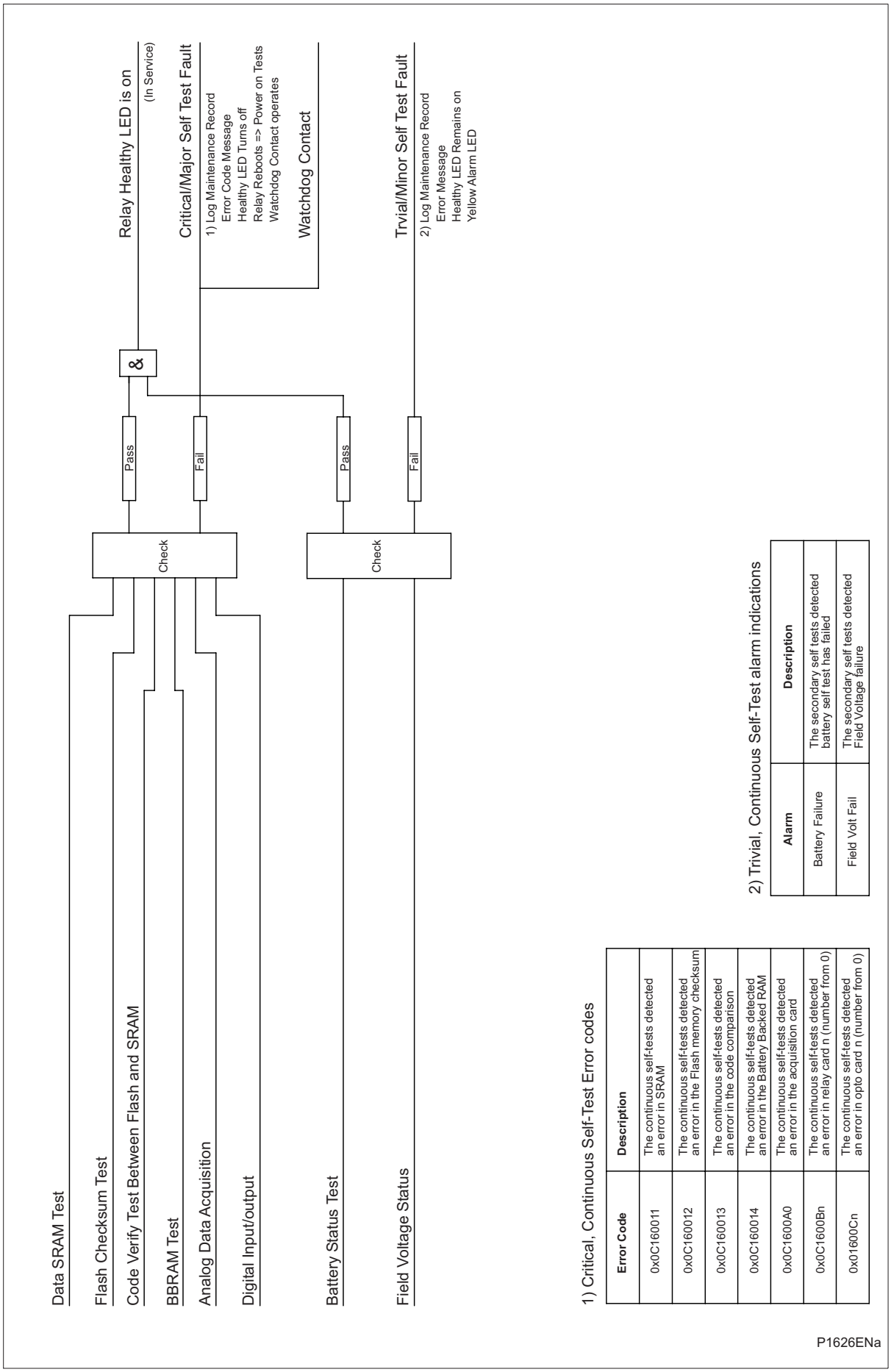

Error Code	Description
0x0C160011	The continuous self-tests detected an error in SRAM
0x0C160012	The continuous self-tests detected an error in the Flash memory checksum
0x0C160013	The continuous self-tests detected an error in the code comparison
0x0C160014	The continuous self-tests detected an error in the Battery Backed RAM
0x0C1600A0	The continuous self-tests detected an error in the acquisition card
0x0C1600Bn	The continuous self-tests detected an error in relay card n (number from 0)
0x01600Cn	The continuous self-tests detected an error in opto card n (number from 0)

Alarm	Description
Battery Failure	The secondary self tests detected battery self test has failed
Field Volt Fail	The secondary self tests detected Field Voltage failure

Figure 10: Continuous self-testing logic

FD

COMMISSIONING

CM

Date:	**24th November 2009**
Hardware suffix:	**J (P241) K (P242/3)**
Software version:	**57**
Connection diagrams:	**10P241xx (xx = 01 to 02)**
	10P242xx (xx = 01)
	10P243xx (xx = 01)

CM

CONTENTS

1	**INTRODUCTION**	**7**
2	**SETTING FAMILIARIZATION**	**8**
3	**COMMISSIONING TEST MENU**	**9**
3.1	**Opto I/P status**	**10**
3.2	**Relay O/P status**	**10**
3.3	**Test port status**	**10**
3.4	**LED status**	**10**
3.5	**Monitor bits 1 to 8**	**10**
3.6	**Test mode**	**11**
3.7	**Test pattern**	**11**
3.8	**Contact test**	**11**
3.9	**Test LEDs**	**11**
3.10	**Red LED status and green LED status (P242/3)**	**11**
3.11	**Using a monitor/download port test box**	**12**
4	**EQUIPMENT REQUIRED FOR COMMISSIONING**	**13**
4.1	**Minimum equipment required**	**13**
4.2	**Optional equipment**	**13**
5	**PRODUCT CHECKS**	**14**
5.1	**With the relay re-energized**	**14**
5.1.1	Visual inspection	15
5.1.2	Current transformer shorting contacts	15
5.1.3	Insulation	16
5.1.4	External wiring	17
5.1.5	Watchdog contacts	17
5.1.6	Auxiliary supply	17
5.2	**With the relay energized**	**18**
5.2.1	Watchdog contacts	18
5.2.2	LCD front panel display	18
5.2.3	Date and time	18
5.2.3.1	With an IRIG-B signal	18
5.2.3.2	Without an IRIG-B signal	19
5.2.4	Light emitting diodes (LEDs)	19
5.2.4.1	Testing the alarm and out of service LEDs	19
5.2.4.2	Testing the trip LED	19
5.2.4.3	Testing the user-programmable LEDs	19
5.2.5	Field voltage supply	19
5.2.6	Input opto-isolators	20
5.2.7	Output relays	20

5.2.8 RTD inputs 21
5.2.9 Current loop inputs 21
5.2.10 Current loop (analog) outputs 22
5.2.11 First rear communications port 22
5.2.11.1 Courier communications 22
5.2.11.2 MODBUS communications 23
5.2.11.3 IEC 60870-5-103 (VDEW) communications 23
5.2.11.4 IEC 61850 communications 23
5.2.12 Second rear communications port 24
5.2.12.1 K-Bus configuration 24
5.2.12.2 EIA(RS)485 configuration 25
5.2.12.3 EIA(RS)232 configuration 25
5.2.13 Current inputs 25
5.2.14 Voltage inputs 27

6 SETTING CHECKS 28
6.1 Apply application-specific settings 28
6.2 Check application-specific settings 28
6.3 Demonstrate correct relay operation 29
6.3.1 Motor differential protection (P243) 29
6.3.1.1 Connect the test circuit 29
6.3.1.2 Biased differential protection lower slope 29
6.3.1.3 Biased differential protection upper slope 30
6.3.2 Motor differential operation and contact assignment 30
6.3.2.1 Phase A 30
6.3.2.2 Phase B 31
6.3.2.3 Phase C 31
6.3.3 Sensitive earth fault protection 31
6.3.3.1 Connect the test circuit 31
6.3.3.2 Perform the test 32
6.3.3.3 Check the operating time 32
6.3.4 Thermal overload protection 33
6.3.4.1 Connect the test circuit 33
6.3.4.2 Perform the test 33
6.3.4.3 Verify the operating time 34

7 ON-LOAD CHECKS 36
7.1 Voltage connections 36
7.2 Current connections 36

8 FINAL CHECKS 38
9 COMMISSIONING TEST RECORD 39
10 SETTING RECORD 48

CM

TABLES

Table 1: List of test facilities within COMMISSION TESTS menu 9
Table 2: Current transformer shorting contact locations 15
Table 3: Watchdog contact status 17
Table 4: Operational range of auxiliary supply Vx 17
Table 5: Field voltage terminals 20
Table 6: RTD input terminals 21
Table 7: EIA(RS)485 terminals 22
Table 8: Signals on the Ethernet connector 24
Table 9: Second rear communications port K-Bus terminals 24
Table 10: Second rear communications port EIA(RS)232 terminals 25
Table 11: Current input terminals 26
Table 12: CT ratio settings 26
Table 13: Voltage input terminals 27
Table 14: VT ratio settings 27
Table 15: Characteristic operating times for I>1 32
Table 16: Measured voltages and VT ratio settings 36

CM

1 INTRODUCTION

The MiCOM P24x motor protection relays are fully numerical in their design, implementing all protection and non-protection functions in software. The relays employ a high degree of self-checking and, in the unlikely event of a failure, will give an alarm. As a result of this, the commissioning tests do not need to be as extensive as with non-numeric electronic or electro-mechanical relays.

To commission numeric relays, it is only necessary to verify that the hardware is functioning correctly and the application-specific software settings have been applied to the relay. It is considered unnecessary to test every function of the relay if the settings have been verified by one of the following methods:

- Extracting the settings applied to the relay using appropriate setting software, which is the preferred method
- Using the operator interface

To confirm that the product is operating correctly once the application-specific settings have been applied, a test should be performed on a single protection element.

Unless previously agreed to the contrary, the customer will be responsible for determining the application-specific settings to be applied to the relay and for testing of any scheme logic applied by external wiring and/or configuration of the relay's internal programmable scheme logic.

Blank commissioning test and setting records are provided at the end of this chapter for completion as required.

As the relays menu language is user-selectable, it is acceptable for the Commissioning Engineer to change it to allow accurate testing as long as the menu is restored to the customer's preferred language on completion.

To simplify the specifying of menu cell locations in these Commissioning Instructions, they will be given in the form [courier reference: COLUMN HEADING, Cell Text]. For example, the cell for selecting the menu language (first cell under the column heading) is located in the System Data column (column 00) so it would be given as [0001: SYSTEM DATA, Language].

Before carrying out any work on the equipment the user should be familiar with the contents of the Safety Section/Safety Guide SFTY/4LM/G11 or later issue and the ratings on the equipment's rating label.

2 SETTING FAMILIARIZATION

When commissioning a MiCOM P24x relay for the first time, sufficient time should be allowed to become familiar with the method by which the settings are applied.

The Relay Menu Database document and Settings chapter (*P24x/EN MD*, *P24x/EN ST*) contain a detailed description of the menu structure of P24x relays.

With the secondary front cover in place all keys except the ↵ key are accessible. All menu cells can be read. LEDs and alarms can be reset. However, no protection or configuration settings can be changed, or fault and event records cleared.

Removing the secondary front cover allows access to all keys so that settings can be changed, LEDs and alarms reset, and fault and event records cleared. However, menu cells that have access levels higher than the default level will require the appropriate password to be entered before changes can be made.

Alternatively, if a portable PC is available together with suitable setting software (such as MiCOM S1 Studio), the menu can be viewed a page at a time to display a full column of data and text. This PC software also allows settings to be entered more easily, saved to a file on disk for future reference or printed to produce a setting record. Refer to the PC software user manual for details. If the software is being used for the first time, allow sufficient time to become familiar with its operation.

3 COMMISSIONING TEST MENU

To help minimize the time required to test MiCOM relays the relay provides several test facilities under the **COMMISSION TESTS** menu heading. There are menu cells which allow the status of the opto-isolated inputs, output relay contacts, internal digital data bus (DDB) signals and user-programmable LEDs to be monitored. Additionally there are cells to test the operation of the output contacts and user-programmable LEDs.

The following table shows the relay menu of commissioning tests, including the available setting ranges and factory defaults:

Menu text	Default setting	Settings
COMMISSION TESTS		
Opto I/P Status	–	–
Relay O/P Status	–	–
Test Port Status	–	–
LED Status	–	–
Monitor Bit 1	96 (LED1) P241 640 (LED1(red)) P242/3	See *P24x/EN MD* for details of Digital Data Bus signals
Monitor Bit 2	97 (LED2) P241 642 (LED2(red)) P242/3	
Monitor Bit 3	98 (LED3) P241 644 (LED3(red)) P242/3	
Monitor Bit 4	99 (LED4) P241 646 (LED4(red)) P242/3	
Monitor Bit 5	100 (LED5) P241 648 (LED5(red)) P242/3	
Monitor Bit 6	101 (LED6) P241 650 (LED6(red)) P242/3	
Monitor Bit 7	102 (LED7) P241 652 (LED7(red)) P242/3	
Monitor Bit 8	103 (LED8) P241 654 (LED8(red) P242/3	
Test Mode	Disabled	Disabled Test Mode Contacts Blocked
Test Pattern	All bits set to 0	0 = Not Operated 1 = Operated
Contact Test	No Operation	No Operation Apply Test Remove Test
Test LEDs	No Operation	No Operation Apply Test

Table 1: List of test facilities within COMMISSION TESTS menu

3.1 Opto I/P status

This menu cell displays the status of the relays opto-isolated inputs as a binary string, a **1** indicating an energized opto-isolated input and a **0** a de-energized one. If the cursor is moved along the binary numbers the corresponding label text will be displayed for each logic input.

It can be used during commissioning or routine testing to monitor the status of the opto-isolated inputs whilst they are sequentially energized with a suitable dc voltage.

3.2 Relay O/P status

This menu cell displays the status of the digital data bus (DDB) signals that result in energization of the output relays as a binary string, a **1** indicating an operated state and 0 a non-operated state. If the cursor is moved along the binary numbers the corresponding label text will be displayed for each relay output.

The information displayed can be used during commissioning or routine testing to indicate the status of the output relays when the relay is 'in service'. Additionally fault finding for output relay damage can be performed by comparing the status of the output contact under investigation with its associated bit.

Note: When the **Test Mode** cell is set to **Enabled** this cell will continue to indicate which contacts would operate if the relay was in-service, it does not show the actual status of the output relays.

3.3 Test port status

This menu cell displays the status of the eight digital data bus (DDB) signals that have been allocated in the **Monitor Bit** cells. If the cursor is moved along the binary numbers the corresponding DDB signal text string will be displayed for each monitor bit.

By using this cell with suitable monitor bit settings, the state of the DDB signals can be displayed as various operating conditions or sequences are applied to the relay. Therefore the programmable scheme logic can be tested.

Alternatively, the optional monitor/download port test box can be plugged into the monitor/download port located behind the bottom access cover. Details of the monitor/download port test box can be found in section 3.10 of this chapter.

3.4 LED status

CM

The **LED Status** cell is an eight bit binary string that indicates which of the user-programmable LEDs on the relay are illuminated when accessing the relay from a remote location, a **1** indicating a particular LED is lit and a **0** not lit.

3.5 Monitor bits 1 to 8

The eight **Monitor Bit** cells allow the user to select the status of which digital data bus signals can be observed in the **Test Port Status** cell or using the monitor or download port.

Each **Monitor Bit** is set by entering the required digital data bus (DDB) signal number (0 - 1022) from the list of available DDB signals in the Relay Menu Database, *P24x/EN MD*. The pins of the monitor or download port used for monitor bits are given in the table below. The signal ground is available on pins 18, 19, 22 and 25.

Monitor bit	1	2	3	4	5	6	7	8
Monitor/download port pin	11	12	15	13	20	21	23	24

The monitor/download port does not have electrical isolation against induced voltages on the communications channel. It should only be used for local communications.

3.6 Test mode

The Test Mode menu cell is used to allow secondary injection testing to be performed on the relay without operation of the trip contacts. The Test Mode is also used in the

IEC 60870-5-103 protocol, see section 5.8 of *P24x/EN SC*. It also enables a facility to directly test the output contacts by applying menu controlled test signals. To select test mode the Test Mode menu cell should be set to **Test Mode** which takes the relay out of service and blocks the maintenance counters. It also causes an alarm condition to be recorded and the yellow **Out of Service** LED to illuminate and an alarm message **Prot'n. Disabled** is given. To enable testing of output contacts the Test Mode cell should be set to Contacts Blocked. This blocks the protection from operating the contacts and enables the test pattern and contact test functions which can be used to manually operate the output contacts. Once testing is complete the cell must be set back to **Disabled** to restore the relay back to service.

When the 'test mode' cell is set to contacts blocked' the relay scheme logic does not drive the output relays. Therefore, the protection will not trip the associated circuit breaker if a fault occurs.

3.7 Test pattern

The **Test Pattern** cell is used to select the output relay contacts that will be tested when the **Contact Test** cell is set to **Apply Test**. The cell has a binary string with one bit for each user-configurable output contact which can be set to **1** to operate the output under test conditions and **0** to not operate it.

3.8 Contact test

When the **Apply Test** command in this cell is issued the contacts set for operation (set to 1) in the **Test Pattern** cell change state. After the test has been applied the command text on the LCD will change to **No Operation** and the contacts will remain in the Test State until reset issuing the **Remove Test** command. The command text on the LCD will again revert to **No Operation** after the **Remove Test** command has been issued.

Note: When the **Test Mode** cell is set to **Enabled** the **Relay O/P Status** cell does not show the current status of the output relays and hence can not be used to confirm operation of the output relays. Therefore it will be necessary to monitor the state of each contact in turn.

3.9 Test LEDs

When the **Apply Test** command in this cell is issued the eight user-programmable LEDs will illuminate for approximately 2 seconds before they extinguish and the command text on the LCD reverts to **No Operation**.

3.10 Red LED status and green LED status (P242/3)

The **Red LED Status** and **Green LED Status** cells are eighteen bit binary strings that indicate which of the user-programmable LEDs on the relay are illuminated when accessing the relay from a remote location, a **1** indicating a particular LED is lit and a **0** not lit. When the status of a particular LED in both cells are **1**, this indicates the LEDs illumination is yellow.

3.11 Using a monitor/download port test box

A monitor/download port test box containing 8 LED's and a switchable audible indicator is available from Schneider Electric, or one of their regional sales offices. It is housed in a small plastic box with a 25-pin male D-connector that plugs directly into the relay's monitor/download port. There is also a 25-pin female D-connector which allows other connections to be made to the monitor/download port whilst the monitor/download port test box is in place.

Each LED corresponds to one of the monitor bit pins on the monitor/download port with **Monitor Bit 1** being on the left hand side when viewing from the front of the relay. The audible indicator can either be selected to sound if a voltage appears any of the eight monitor pins or remain silent so that indication of state is by LED alone.

4 EQUIPMENT REQUIRED FOR COMMISSIONING

4.1 Minimum equipment required

Overcurrent test set with interval timer

110 V ac voltage supply (if stage 1 of the overcurrent function is set directional)

Multimeter with suitable ac current range, and ac and dc voltage ranges of 0 - 440 V and

0 - 250 V respectively

Continuity tester (if not included in multimeter)

Phase angle meter

Phase rotation meter

100 Ω precision wire wound or metal film resistor, 0.1% tolerance (0°C±2°C)

Note: Modern test equipment may contain many of the above features in one unit.

4.2 Optional equipment

Multi-finger test plug type MMLB01 or P992 (if test block type MMLG or P991 installed).

An electronic or brushless insulation tester with a dc output not exceeding 500 V (For insulation resistance testing when required).

A portable PC, with appropriate software (This enables the rear communications port to be tested if this is to be used and will also save considerable time during commissioning).

KITZ K-Bus to EIA(RS)232 protocol converter (if first rear EIA(RS)485 K-Bus port or second rear port configured for K-Bus is being tested and one is not already installed).

EIA(RS)485 to EIA(RS)232 converter (if first rear EIA(RS)485 port or second rear port configured for EIA(RS)485 is being tested).

A printer (for printing a setting record from the portable PC).

5 PRODUCT CHECKS

These product checks cover all aspects of the relay that need to be checked to ensure that it has not been physically damaged prior to commissioning, is functioning correctly and all input quantity measurements are within the stated tolerances.

If the application-specific settings have been applied to the relay prior to commissioning, it is advisable to make a copy of the settings so as to allow their restoration later. If programmable scheme logic other than the default settings with which the relay is supplied have been applied the default settings should be restored prior to commissioning. This could be done by:

- Obtaining a setting file on a diskette from the customer. (This requires a portable PC with appropriate setting software for transferring the settings from the PC to the relay).
- Extracting the settings from the relay itself. (This again requires a portable PC with appropriate setting software).
- Manually creating a setting record. This could be done using a copy of the setting record located at the end of this sub-document to record the settings as the relay's menu is sequentially stepped through via the front panel user interface.

If password protection is enabled and the customer has changed password 2 that prevents unauthorized changes to some of the settings, either the revised password 2 should be provided, or the customer should restore the original password prior to commencement of testing.

Note: If the password is lost, a recovery password can be obtained from Schneider Electric by quoting the serial number of the relay. The recovery password is unique to that relay and is unlikely to work on any other relay.

Before carrying out any work on the equipment the user should be familiar with the contents of the Safety Section/Safety Guide SFTY/4LM/G11 or later issue and the ratings on the equipment's rating label.

5.1 With the relay re-energized

The following group of tests should be carried out without the auxiliary supply being applied to the relay and with the trip circuit isolated.

The current and voltage transformer connections must be isolated from the relay for these checks. If a P991 or MMLG test block is provided, the required isolation can easily be achieved by inserting test plug type P992 or MMLB01 which effectively open-circuits all wiring routed through the test block.

CM

Before inserting the test plug, reference should be made to the scheme (wiring) diagram to ensure that this will not potentially cause damage or a safety hazard. For example, the test block may be associated with protection current transformer circuits. It is essential that the sockets in the test plug which correspond to the current transformer secondary windings are linked before the test plug is inserted into the test block.

DANGER: Never open circuit the secondary circuit of a current transformer since the high voltage produced may be lethal and could damage insulation.

If a test block is not provided, the voltage transformer supply to the relay should be isolated by means of the panel links or connecting blocks. The line current transformers should be short-circuited and disconnected from the relay terminals. Where means of isolating the auxiliary supply and trip circuit (e.g. isolation links, fuses, MCB, etc.) are provided, these should be used. If this is not possible, the wiring to these circuits will have to be disconnected and the exposed ends suitably terminated to prevent them from being a safety hazard.

5.1.1 Visual inspection

The rating information given under the top access cover on the front of the relay should be checked. Check that the relay being tested is correct for the protected line/circuit. Ensure that the circuit reference and system details are entered onto the setting record sheet. Double-check the CT secondary current rating, and be sure to record the actual CT tap which is in use.

Carefully examine the relay to see that no physical damage has occurred since installation.

Ensure that the case earthing connections, bottom left-hand corner at the rear of the relay case, are used to connect the relay to a local earth bar using an adequate conductor.

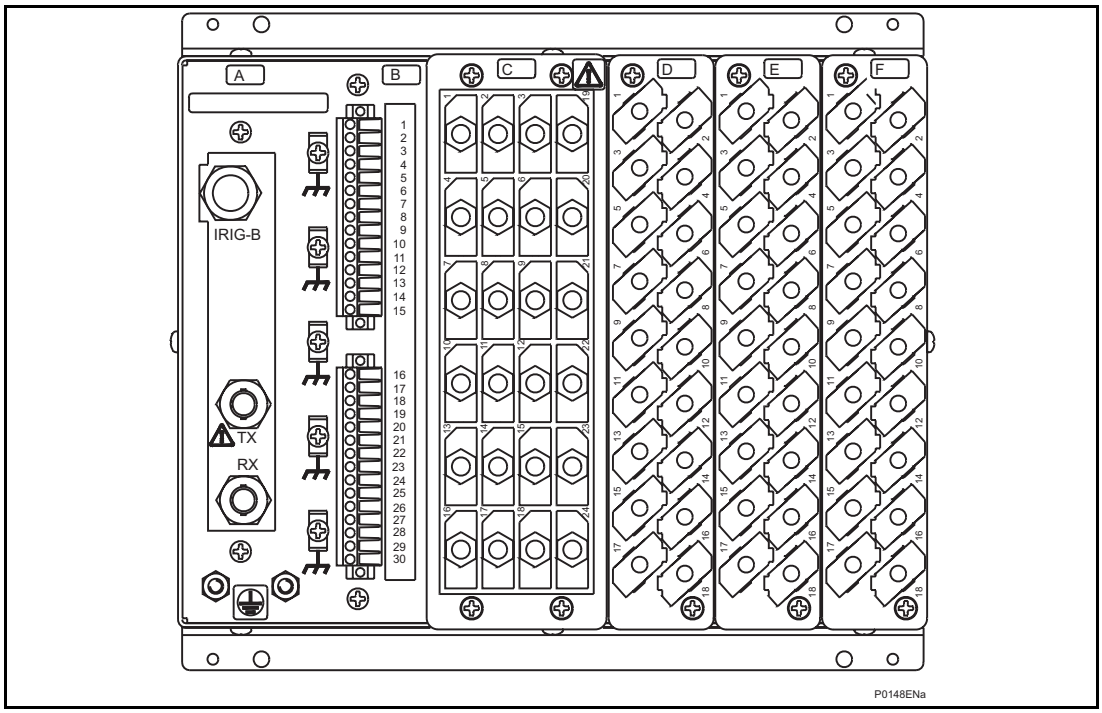

Figure 1: Rear terminal blocks on size 40TE case

5.1.2 Current transformer shorting contacts

If required, the current transformer shorting contacts can be checked to ensure that they close when the heavy duty terminal block (block reference C in 01) is disconnected from the current input PCB. For P241 relays block reference C (40TE case) are heavy duty terminal blocks. In the case of P242/3 relays they are located at block references D (60TE case) and D and F (80TE case).

Current input	Shorting contact between terminals			
	P241 (40TE)		P242 (60TE), P243 (80TE)	
	1A CT's	5A CT's	1A CT's	5A CT's
IA	C3 - C2	C1 - C2	D3 - D2	D1 - D2
IB	C6 - C5	C4 - C5	D6 - D5	D4 - D5
IC	C9 - C8	C7 - C8	D9 - D8	D7 - D8
IN SENSITIVE	C15 - C14	C13 - C14	D15 - D14	D13 - D14
IA(2) (P243 only)			F3 - F2	F1 - F2
IB(2) (P243 only)			F6 - F5	F4 - F5
IC(2) (P243 only)			F9 - F8	F7 - F8

Table 2: Current transformer shorting contact locations

Heavy duty terminal block are fastened to the rear panel using four crosshead screws. These are located top and bottom between the first and second, and third and fourth, columns of terminals (see Figure 2).

Note: The use of a magnetic bladed screwdriver is recommended to minimize the risk of the screws being left in the terminal block or lost.

Pull the terminal block away from the rear of the case and check with a continuity tester that all the shorting switches being used are closed. Table 2 shows the terminals between which shorting contacts are fitted.

If external test blocks are connected to the relay, great care should be taken when using the associated test plugs such as MMLB and MiCOM P992 since their use may make hazardous voltages accessible. *CT shorting links must be in place before the insertion or removal of MMLB test plugs, to avoid potentially lethal voltages.

***NOTE: When a MiCOM P992 Test Plug is inserted into the MiCOM P991 Test Block, the secondaries of the line CTs are automatically shorted, making them safe.**

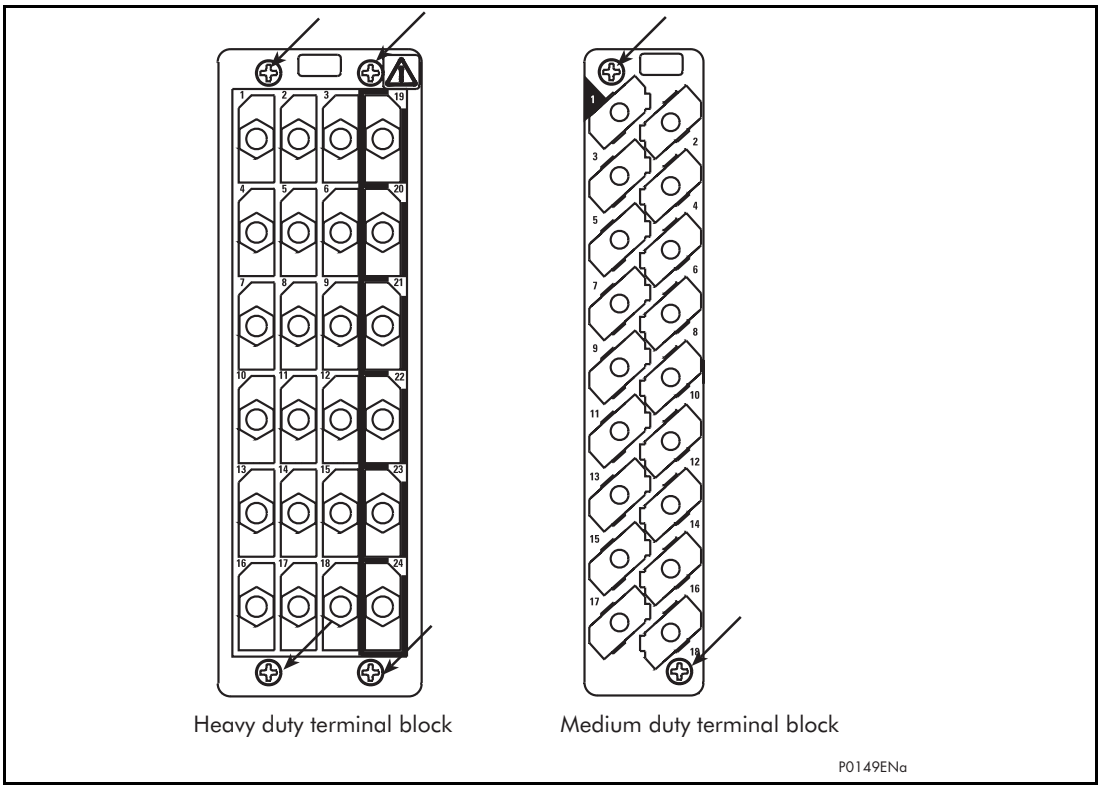

Figure 2: Location of securing screws for heavy duty terminal blocks

5.1.3 Insulation

Insulation resistance tests are only necessary during commissioning if it is required for them to be done and they haven't been performed during installation.

Isolate all wiring from the earth and test the insulation with an electronic or brushless insulation tester at a dc voltage not exceeding 500 V. Terminals of the same circuits should be temporarily connected together.

The main groups of relay terminals are:

1. Voltage transformer circuits
2. Current transformer circuits
3. Auxiliary voltage supply
4. Field voltage output and opto-isolated control inputs
5. Relay contacts
6. First rear EIA(RS)485 communication port
7. RTD inputs

CM

8. Current loop (analog) inputs and outputs (CLIO)
9. Case earth

The insulation resistance should be greater than 100 MΩ at 500 V.

On completion of the insulation resistance tests, ensure all external wiring is correctly reconnected to the unit.

5.1.4 External wiring

Check that the external wiring is correct to the relevant relay diagram or scheme diagram. The relay diagram number appears on the rating label under the top access cover on the front of the relay. The corresponding connection diagram will have been supplied with the Schneider Electric order acknowledgement for the relay.

If a P991 or MMLG test block is provided, the connections should be checked against the scheme (wiring) diagram. It is recommended that the supply connections are to the live side of the test block (colored orange with the odd numbered terminals (1, 3, 5, 7 etc.)). The auxiliary supply is normally routed via terminals 13 (supply positive) and 15 (supply negative), with terminals 14 and 16 connected to the relay's positive and negative auxiliary supply terminals respectively. However, check the wiring against the schematic diagram for the installation to ensure compliance with the customer's normal practice.

5.1.5 Watchdog contacts

Using a continuity tester, check that the watchdog contacts are in the states given in Table 3 for a de-energized relay.

Terminals		Contact state	
		Relay de-energized	Relay energized
F11 - F12 J11 - J12 M11 - M12	(P241 40TE) (P242 60TE) (P243 80TE)	Closed	Open
F13 - F14 J13 - J14 M13 - M14	(P241 40TE) (P242 60TE) (P243 80TE)	Open	Closed

Table 3: Watchdog contact status

5.1.6 Auxiliary supply

The relay can be operated from either a dc only or an ac/dc auxiliary supply depending on the relay's nominal supply rating. The incoming voltage must be within the operating range specified in Table 4.

Without energizing the relay, measure the auxiliary supply to ensure it is within the operating range.

Nominal supply rating DC [AC rms]		DC operating range	AC operating range
24 - 48 V	[-]	19 - 65 V	-
48 - 110 V	[30 - 100 V]	37 - 150 V	24 - 110 V
110 - 240 V	[100 - 240 V]	87 - 300 V	80 - 265 V

Table 4: Operational range of auxiliary supply Vx

Note: The relay can withstand an ac ripple of up to 12% of the upper rated voltage on the dc auxiliary supply.

Do not energize the relay using the battery charger with the battery disconnected as this can irreparably damage the relay's power supply circuitry.

Energize the relay only if the auxiliary supply is within the operating range. If test block is provided, it may be necessary to link across the front of the test plug to connect the auxiliary supply to the relay.

5.2 With the relay energized

The following group of tests verify that the relay hardware and software is functioning correctly and should be carried out with the auxiliary supply applied to the relay.

The current and voltage transformer connections must remain isolated from the relay for these checks. The trip circuit should also remain isolated to prevent accidental operation of the associated circuit breaker.

5.2.1 Watchdog contacts

Using a continuity tester, check the watchdog contacts are in the states given in Table 2 for an energized relay.

5.2.2 LCD front panel display

The liquid crystal display is designed to operate in a wide range of substation ambient temperatures. For this purpose, the Px40 relays have an LCD Contrast setting. This allows the user to adjust how light or dark the characters displayed will be. The contrast is factory pre-set to account for a standard room temperature, however it may be necessary to adjust the contrast to give the best in-service display. To change the contrast, cell [09FF: LCD Contrast] at the bottom of the CONFIGURATION column can be incremented (darker) or decremented (lighter), as required.

Care: **Before applying a contrast setting, ensure that it will not render the display too light or dark such that menu text becomes unreadable. Should such a mistake be made, it is possible to restore a visible display by downloading a MiCOM S1 Studio setting file, with the LCD Contrast set within the typical range of 7 - 11.**

5.2.3 Date and time

Before setting the date and time, ensure that the factory-fitted battery isolation strip that prevents battery drain during transportation and storage has been removed. With the lower access cover open, presence of the battery isolation strip can be checked by a red tab protruding from the positive side of the battery compartment. Lightly pressing the battery to prevent it falling out of the battery compartment, pull the red tab to remove the isolation strip.

The data and time should now be set to the correct values. The method of setting will depend on whether accuracy is being maintained via the optional inter-range instrumentation group standard B (IRIG-B) port on the rear of the relay.

5.2.3.1 With an IRIG-B signal

If a satellite time clock signal conforming to IRIG-B is provided and the relay has the optional IRIG-B port fitted, the satellite clock equipment should be energized.

To allow the relays time and date to be maintained from an external IRIG-B source cell [0804: DATE and TIME, IRIG-B Sync.] must be set to **Enabled**.

Ensure the relay is receiving the IRIG-B signal by checking that cell [0805: DATE and TIME, IRIG-B Status] reads **Active**.

Once the IRIG-B signal is active, adjust the time offset of the universal co-ordinated time (satellite clock time) on the satellite clock equipment so that local time is displayed.

Check the time, date and month are correct in cell [0801: DATE and TIME, Date/Time]. The IRIG-B signal does not contain the current year so it will need to be set manually in this cell.

In the event of the auxiliary supply failing, with a battery fitted in the compartment behind the bottom access cover, the time and date will be maintained. Therefore, when the auxiliary supply is restored, the time and date will be correct and not need to be set again.

To test this, remove the IRIG-B signal, then remove the auxiliary supply from the relay. Leave the relay de-energized for approximately 30 seconds. On re-energization, the time in cell [0801: DATE and TIME, Date/Time] should be correct.

Reconnect the IRIG-B signal.

5.2.3.2 Without an IRIG-B signal

If the time and date is not being maintained by an IRIG-B signal, ensure that cell [0804: DATE and TIME, IRIG-B Sync.] is set to **Disabled**.

Set the date and time to the correct local time and date using cell [0801: DATE and TIME, Date/Time].

In the event of the auxiliary supply failing, with a battery fitted in the compartment behind the bottom access cover, the time and date will be maintained. Therefore when the auxiliary supply is restored the time and date will be correct and not need to be set again.

To test this, remove the auxiliary supply from the relay for approximately 30 seconds. On re-energization, the time in cell [0801: DATE and TIME, Date/Time] should be correct.

5.2.4 Light emitting diodes (LEDs)

On power up the green LED should have illuminated and stayed on indicating that the relay is healthy. The relay has non-volatile memory which remembers the state (on or off) of the alarm, trip and, if configured to latch, user-programmable LED indicators when the relay was last energized from an auxiliary supply. Therefore these indicators may also illuminate when the auxiliary supply is applied.

If any of these LEDs are on, then they should be reset before proceeding with further testing. If the LED's successfully reset (the LED goes out), there is no testing required for that LED because it is known to be operational.

5.2.4.1 Testing the alarm and out of service LEDs

The alarm and out of service LEDs can be tested using the COMMISSIONING TESTS menu column. Set cell [0F0D: COMMISSIONING TESTS, Test Mode] to **Contacts Blocked**. Check that the out of service LED illuminates continuously and the alarm LED flashes.

It is not necessary to return cell [0F0D: COMMISSIONING TESTS, Test Mode] to **Disabled** at this stage because the test mode will be required for later tests.

5.2.4.2 Testing the trip LED

The trip LED can be tested by initiating a manual circuit breaker trip from the relay. However, the trip LED will operate during the setting checks performed later. Therefore no further testing of the trip LED is required at this stage.

5.2.4.3 Testing the user-programmable LEDs

To test the user-programmable LEDs set cell [0F10: COMMISSIONING TESTS, Test LEDs] to **Apply Test**. Check that all 8 (P241) or 18 (P242/3) programmable LEDs on the relay illuminate.

5.2.5 Field voltage supply

The relay generates a field voltage of nominally 48 V that can be used to energize the opto-isolated inputs (alternatively the substation battery may be used).

Measure the field voltage across terminals 7 and 9 on the terminal block given in Table 5. Check that the field voltage is within the range 40 V to 60 V when no load is connected and that the polarity is correct.

Repeat for terminals 8 and 10.

Supply rail	Terminals		
	P241 (40TE)	P242 (60TE)	P243 (80TE)
+ve	F7 & F8	J7 & J8	M7 & M8
-ve	F9 & F10	J9 & J10	M9 & M10

Table 5: Field voltage terminals

5.2.6 Input opto-isolators

This test checks that all the opto-isolated inputs are functioning correctly. The P241 relay has 8 opto-isolated inputs in the 40TE case. The P242 relay has 16 opto-isolated inputs in the 60TE case and the P243 has 16 opto-isolated inputs in the 80TE case.

The opto-isolated inputs should be energized one at a time, see the Installation chapter (*P24x/EN IN*) for the terminal numbers. Ensuring that the correct opto input nominal voltage is set in the **Opto Config**. menu and correct polarity, connect the field supply voltage to the appropriate terminals for the input being tested. Each opto input also has selectable filtering. This allows use of a pre-set filter of ½ cycle that renders the input immune to induced noise on the wiring.

Note: The opto-isolated inputs may be energized from an external dc auxiliary supply (e.g. the station battery) in some installations. Check that this is not the case before connecting the field voltage otherwise damage to the relay may result. If an external 24/27 V, 30/34 V, 48/54 V, 110/125 V, 220/250 V supply is being used it will be connected to the relay's optically isolated inputs directly. If an external supply is being used then it must be energized for this test but only if it has been confirmed that it is suitably rated with less than 12% ac ripple.

The status of each opto-isolated input can be viewed using either cell [0020: SYSTEM DATA, Opto I/P Status] or [0F01: COMMISSIONING TESTS, Opto I/P Status], a **1** indicating an energized input and a **0** indicating a de-energized input. When each opto-isolated input is energized one of the characters on the bottom line of the display will change to indicate the new state of the inputs.

5.2.7 Output relays

This test checks that all the output relays are functioning correctly. The P241 relay has 7 output relays in the 40TE case. The P242 relay has 16 output relays in the 60TE case and the P243 has 16 output relays in the 80TE case.

CM

Ensure that the cell [0F0D: COMMISSIONING TESTS, Test Mode] is set to **Contacts Blocked**.

The output relays should be energized one at a time. To select output relay 1 for testing, set cell [0F0E: COMMISSIONING TESTS, Test Pattern] 00000000000000000000000000000001.

Connect a continuity tester across the terminals corresponding to output relay 1 as given in the external connection diagram (*P24x/EN IN*).

To operate the output relay set cell [0F0F: COMMISSIONING TESTS, Contact Test] to **Apply Test**. Operation will be confirmed by the continuity tester operating for a normally open contact and ceasing to operate for a normally closed contact. Measure the resistance of the contacts in the closed state.

Reset the output relay by setting cell [0F0F: COMMISSIONING TESTS, Contact Test] to **Remove Test**.

Note: It should be ensured that thermal ratings of anything connected to the output relays during the contact test procedure is not exceeded by the associated output relay being operated for too long. It is therefore advised that the time between application and removal of contact test is kept to the minimum.

Repeat the test for the rest of the relays.

Return the relay to service by setting cell [0F0D: COMMISSIONING TESTS, Test Mode] to **Disabled**.

5.2.8 RTD inputs

This test checks that all the RTD inputs are functioning correctly and is only performed on relays with the RTD board fitted.

A 100 Ω resistor, preferably with a tolerance of 0.1%, should be connected across each RTD in turn for PT100 and Ni100 RTDs and a 120 Ω resistor for Ni120 RTDs. The resistor needs to have a very small tolerance as RTDs complying to BS EN 60751 : 1995 typically have a change of resistance of 0.39 Ω per °C, therefore the use of a precision wire wound or metal film resistor is recommended. It is essential to connect the RTD common return terminal to the appropriate RTD input otherwise the relay will report an RTD error as it will assume that the RTD wiring has been damaged. The connections required for testing each RTD input are given in Table 6.

Check that the corresponding temperature displayed in the **MEASUREMENTS 3** column of the menu is 0°C ±2°C. This range takes into account the 0.1% resistor tolerance and relay accuracy of ±1°C. If a resistor of lower accuracy is used during testing the acceptable setting range will need to be increased.

RTD	Terminal connections		Measurement cell (in 'measurements 3' column (04) of menu)	
	Resistor between	Wire between		
1	B1 and B2	B2 and B3	[0405:	RTD 1 Label]
2	B4 and B5	B5 and B6	[0406:	RTD 2 Label]
3	B7 and B8	B8 and B9	[0407:	RTD 3 Label]
4	B10 and B11	B11 and B12	[0408:	RTD 4 Label]
5	B13 and B14	B14 and B15	[0409:	RTD 5 Label]
6	B16 and B17	B17 and B18	[040A:	RTD 6 Label]
7	B19 and B20	B20 and B21	[040B:	RTD 7 Label]
8	B22 and B23	B23 and B24	[040C:	RTD 8 Label]
9	B25 and B26	B26 and B27	[040D:	RTD 9 Label]
10	B28 and B29	B29 and B30	[040E:	RTD 10 Label]

Table 6: RTD input terminals

5.2.9 Current loop inputs

This test checks that all the current loop (analog) inputs are functioning correctly and is only performed on relays with the CLIO (current loop input output) board fitted.

Relay terminal connections can be found by referring to the connection diagrams in the Installation chapter, *P24x/EN IN*.

Note: The current loop inputs the physical connection of the 0 - 1 mA input is different from that of the 0 - 10, 0 - 20 and 4 - 20 mA inputs, as shown in the connection diagrams.

An accurate dc current source can be used to apply various current levels to the current loop inputs. Another approach is to use the current loop output as a convenient and flexible dc current source to test the input protection functionality. Externally the current loop outputs can be fed into their corresponding current loop inputs. Then by applying a certain level of analog signal, such as VA, to the relay the required dc output level can be obtained from the current loop output which is feeding the current loop input.

Enable the current loop input to be tested. Set the CLIx minimum and maximum settings and the CLIx Input type for the application.

Apply a dc current to the relay current loop input at 50% of the CLI input maximum range, 0.5 mA (0 - 1 mA CLI), 5 mA (0 - 10 mA CLI) or 10 mA (0 - 20, 4 - 20 mA CLI).

Check the accuracy of the current loop input using the MEASUREMENTS 3 - ANALOG Input 1/2/3/4 column of the menu. The display should show (CLIx maximum + CLIx minimum)/2 ±1% full scale accuracy.

5.2.10 Current loop (analog) outputs

This test checks that all the current loop (analog) outputs are functioning correctly and is only performed on relays with the CLIO board fitted.

Relay terminal connections can be found by referring to the connection diagrams in *P24x/EN IN*.

Note: For the current loop outputs the physical connection of the 0 - 1 mA output is different from that of the 0 - 10, 0 - 20 and 4 - 20 mA outputs, as shown in the connection diagrams.

Enable the current loop output to be tested. Set the Analog Output parameter, Analog Outputx minimum and maximum settings and the Analogx Output type (range) for the application. Apply the appropriate analog input parameter to the relay equals to (Analogx maximum + Analogx minimum)/2. The current loop output should be at 50% of its maximum rated output. Using a precision resistive current shunt together with a high-resolution voltmeter, check that the analog (current loop) output is at 50% of its maximum rated output, 0.5 mA (0 - 1 mA CLO), 5 mA (0 - 10 mA CLO) or 10 mA (0 - 20, 4 - 20mA CLO). The accuracy should be within ±0.5% of full scale + meter accuracy.

5.2.11 First rear communications port

This test should only be performed where the relay is to be accessed from a remote location and will vary depending on the communications standard being adopted.

It is not the intention of the test to verify the operation of the complete system from the relay to the remote location, just the relay's rear communications port and any protocol converter necessary.

5.2.11.1 Courier communications

CM

If a K-Bus to EIA(RS)232 KITZ protocol converter is installed, connect a portable PC running the appropriate software (e.g. MiCOM S1 Studio or PAS&T) to the incoming (remote from relay) side of the protocol converter.

If a KITZ protocol converter is not installed, it may not be possible to connect the PC to the relay installed. In this case a KITZ protocol converter and portable PC running appropriate software should be temporarily connected to the relay's first rear K-Bus port. The terminal numbers for the relays first rear K-Bus port are given in Table 7. However, as the installed protocol converter is not being used in the test, only the correct operation of the relays

K-Bus port will be confirmed.

Connection		Terminal		
K-Bus	MODBUS or VDEW	P241 (40TE)	P242 (60TE)	P243 (80TE)
Screen	Screen	F16	J16	M16
1	+ve	F17	J17	M17
2	-ve	F18	J18	M18

Table 7: EIA(RS)485 terminals

Ensure that the communications baud rate and parity settings in the application software are set the same as those on the protocol converter (usually a KITZ but could be a SCADA RTU). The relays Courier address in cell [0E02: COMMUNICATIONS, Remote Address] must be set to a value between 1 and 254.

Check that communications can be established with this relay using the portable PC.

If the relay has the optional fiber optic communications port fitted, the port to be used should be selected by setting cell [0E07: COMMUNICATIONS, Physical Link] to Fiber Optic. Ensure that the relay address and baud rate settings in the application software are set the same as those in cell [0E04 COMMUNICATIONS, Baud Rate] of the relay. Check that, using the Master Station, communications with the relay can be established.

5.2.11.2 MODBUS communications

Connect a portable PC running the appropriate MODBUS Master Station software to the relay's first rear EIA(RS)485 port via an EIA(RS)485 to EIA(RS)232 interface converter. The terminal numbers for the relay's EIA(RS)485 port are given in Table 6.

Ensure that the relay address, baud rate and parity settings in the application software are set the same as those in cells [0E02: COMMUNICATIONS, Remote Address], [0E04: COMMUNICATIONS, Baud Rate] and [0E05: COMMUNICATIONS, Parity] of the relay.

Check that communications with this relay can be established.

If the relay has the optional fiber optic communications port fitted, the port to be used should be selected by setting cell [0E07: COMMUNICATIONS, Physical Link] to Fiber Optic. Ensure that the relay address and baud rate settings in the application software are set the same as those in cell [0E04: COMMUNICATIONS, Baud Rate] of the relay. Check that, using the Master Station, communications with the relay can be established.

5.2.11.3 IEC 60870-5-103 (VDEW) communications

If the relay has the optional fiber optic communications port fitted, the port to be used should be selected by setting cell [0E07: COMMUNICATIONS, Physical Link] to **Fiber Optic** or **EIA(RS)485**.

IEC 60870-5-103/VDEW communication systems are designed to have a local Master Station and this should be used to verify that the relay's rear fiber optic or EIA(RS)485 port, as appropriate, is working.

Ensure that the relay address and baud rate settings in the application software are set the same as those in cells [0E02: COMMUNICATIONS, Remote Address] and [0E04: COMMUNICATIONS, Baud Rate] of the relay.

Check that, using the Master Station, communications with the relay can be established.

5.2.11.4 IEC 61850 communications

Connect a portable PC running the appropriate IEC 61850 Master Station Software or MMS browser to the relays Ethernet port (RJ45 or ST fiber optic connection). The terminal numbers for the relays Ethernet port are given in Table 8.

Configuration of the relay IP parameters (IP Address, Subnet Mask, Gateway) and SNTP time synchronization parameters (SNTP Server 1, SNTP Server 2) is performed by the IED Configurator tool, so if these parameters are not available via an SCL file, they must be configured manually.

If the assigned IP address is duplicated elsewhere on the same network, the remote communications will operate in an indeterminate way. However, the relay will check for a conflict on every IP configuration change and at power up. An alarm will be raised if an IP conflict is detected. The relay can be configured to accept data from networks other than the local network by using the 'Gateway' setting.

Check that communications with this relay can be established.

In order to communicate with an IEC 61850 IED on Ethernet, it is necessary only to know its IP address. This can then be configured into either:

- An IEC 61850 "client" (or master), for example a PACiS computer (MiCOM C264) or HMI, or
- An "MMS browser", with which the full data model can be retrieved from the IED, without any prior knowledge

Setting changes (e.g. of protection settings) are not supported in the current IEC 61850 implementation. In order to keep this process as simple as possible, such setting changes are done using MiCOM S1 Studio Settings & Records program. This can be done as previously using the front port serial connection of the relay, or over the Ethernet link if preferred (this is known as "tunneling"). See SCADA Communications chapter, *P24x/EN SC* for more information on IEC 61850.

The connector for the Ethernet port is a shielded RJ-45. The table shows the signals and pins on the connector.

Pin	Signal name	Signal definition
1	TXP	Transmit (positive)
2	TXN	Transmit (negative)
3	RXP	Receive (positive)
4	-	Not used
5	-	Not used
6	RXN	Receive (negative)
7	-	Not used
8	-	Not used

Table 8: Signals on the Ethernet connector

5.2.12 Second rear communications port

This test should only be performed where the relay is to be accessed from a remote location and will vary depending on the communications standard being adopted.

It is not the intention of the test to verify the operation of the complete system from the relay to the remote location, just the relays rear communications port and any protocol converter necessary.

5.2.12.1 K-Bus configuration

If a K-Bus to EIA(RS)232 KITZ protocol converter is installed, connect a portable PC running the appropriate software (e.g. MiCOM S1 Studio or PAS&T) to the incoming (remote from relay) side of the protocol converter.

If a KITZ protocol converter is not installed, it may not be possible to connect the PC to the relay installed. In this case a KITZ protocol converter and portable PC running appropriate software should be temporarily connected to the relay's second rear communications port configured for K-Bus. The terminal numbers for the relay's K-Bus port are given in Table 9. However, as the installed protocol converter is not being used in the test, only the correct operation of the relay's K-Bus port will be confirmed.

Pin*	Connection
4	EIA(RS)485 - 1 (+ ve)
7	EIA(RS)485 - 2 (- ve)

Table 9: Second rear communications port K-Bus terminals

* - All other pins unconnected.

Ensure that the communications baud rate and parity settings in the application software are set the same as those on the protocol converter (usually a KITZ but could be a SCADA RTU). The relay's Courier address in cell [0E90: COMMUNICATIONS, RP2 Address] must be set to a value between 1 and 254. The second rear communication's port configuration [0E88: COMMUNICATIONS RP2 Port Config.] must be set to K-Bus.

Check that communications can be established with this relay using the portable PC.

5.2.12.2 EIA(RS)485 configuration

If an EIA(RS)485 to EIA(RS)232 converter (Schneider Electric CK222) is installed, connect a portable PC running the appropriate software (e.g. MiCOM S1 Studio) to the EIA(RS)232 side of the converter and the second rear communications port of the relay to the EIA(RS)485 side of the converter.

The terminal numbers for the relay's EIA(RS)485 port are given in Table 6.

Ensure that the communications baud rate and parity settings in the application software are set the same as those in the relay. The relays Courier address in cell [0E90: COMMUNICATIONS, RP2 Address] must be set to a value between 1 and 254. The second rear communication's port configuration [0E88: COMMUNICATIONS RP2 Port Config.] must be set to EIA(RS)485.

Check that communications can be established with this relay using the portable PC.

5.2.12.3 EIA(RS)232 configuration

Connect a portable PC running the appropriate software (e.g. MiCOM S1 Studio) to the rear EIA(RS)232[1] port of the relay.

The second rear communications port connects via the 9-way female D-type connector (SK4). The connection is compliant to EIA(RS)574.

Pin	Connection
1	No Connection
2	RxD
3	TxD
4	DTR#
5	Ground
6	No Connection
7	RTS#
8	CTS#
9	No Connection

Table 10: Second rear communications port EIA(RS)232 terminals

- These pins are control lines for use with a modem.

Connections to the second rear port configured for EIA(RS)232 operation can be made using a screened multi-core communication cable up to 15 m long, or a total capacitance of 2500 pF. The cable should be terminated at the relay end with a 9-way, metal shelled,

D-type male plug. The terminal numbers for the relay's EIA(RS)232 port are given in Table 8.

Ensure that the communications baud rate and parity settings in the application software are set the same as those in the relay. The relays Courier address in cell [0E90: COMMUNICATIONS, RP2 Address] must be set to a value between 1 and 254. The second rear communication's port configuration [0E88: COMMUNICATIONS RP2 Port Config] must be set to EIA(RS)232.

Check that communications can be established with this relay using the portable PC.

5.2.13 Current inputs

This test verifies that the accuracy of current measurement is within the acceptable tolerances.

All relays will leave the factory set for operation at a system frequency of 50 Hz. If operation at 60 Hz is required then this must be set in cell [0009: SYSTEM DATA, Frequency].

[1] This port is actually compliant to EIA(RS)574; the 9-pin version of EIA(RS)232, see www.tiaonline.org.

Apply current equal to the line current transformer secondary winding rating to each current transformer input of the corresponding rating in turn, checking its magnitude using a multimeter. Refer to Table 11 for the corresponding reading in the relays MEASUREMENTS 1 or MEASUREMENTS 3 columns, as appropriate, and record the value displayed.

Menu cell	Apply current to			
	P241 (40TE)		P242 (60TE) P243 (80TE)	
	1 A CTs	5 A CTs	1 A CTs	5 A CTs
[0201: MEASUREMENTS 1, IA Magnitude]	C3 - C2	C1 - C2	D3 - D2	D1 - D2
[0203: MEASUREMENTS 1, IB Magnitude]	C6 - C5	C4 - C5	D6 - D5	D4 - D5
[0205: MEASUREMENTS 1, IC Magnitude]	C9 - C8	C7 - C8	D9 - D8	D7 - D8
[020B: MEASUREMENTS 1, ISEF Magnitude]	C15 - C14	C13 - C14	D15 - D14	D13 - D14
[0230: MEASUREMENTS 1, IA-2 Magnitude] (P243 only)			F3 - F2	F1 - F2
[0232: MEASUREMENTS 1, IB-2 Magnitude] (P243 only)			F6 - F5	F4 - F5
[0234: MEASUREMENTS 1, IC-2 Magnitude] (P243 only)			F9 - F8	F7 - F8

Table 11: Current input terminals

The measured current values displayed on the relay LCD or a portable PC connected to the front communication port will either be in primary or secondary Amperes. If cell [0D02: MEASURE'T SETUP, Local Values] is set to **Primary**, the values displayed should be equal to the applied current multiplied by the corresponding current transformer ratio set in the **CT and VT RATIOS** menu column (see Table 12). If cell [0D02: MEASURE'T SETUP, Local Values] is set to **Secondary**, the value displayed should be equal to the applied current.

Note: If a PC connected to the relay via the rear communications port is being used to display the measured current, the process will be similar. However, the setting of cell [0D03: MEASURE'T SETUP, Remote Values] will determine whether the displayed values are in primary or secondary Amperes.

CM

The measurement accuracy of the relay is ±1%. However, an additional allowance must be made for the accuracy of the test equipment being used.

Menu cell	Corresponding CT ratio (in 'VT and CT RATIO column (0A) of menu)
[0201: MEASUREMENTS 1, IA Magnitude] [0203: MEASUREMENTS 1, IB Magnitude] [0205: MEASUREMENTS 1, IC Magnitude] [0230: MEASUREMENTS 1, IA - 2 Magnitude] (P243 only) [0232: MEASUREMENTS 1, IB - 2 Magnitude] (P243 only) [0234: MEASUREMENTS 1, IC - 2 Magnitude] (P243 only)	[0A07: Phase CT Primary] [0A08: Phase CT Sec'y]
[020B: MEASUREMENTS 1, ISEF Magnitude]	[0A0B: SEF CT Primary] [0A0C: SEF CT Sec'y]

Table 12: CT ratio settings

5.2.14 Voltage inputs

This test verifies the accuracy of voltage measurement is within the acceptable tolerances.

Three modes of connection are available on the P24x relay: either 3VTs connection, or 2VTs plus residual VT connection or 2VTs plus remanent voltage VT connection (see Installation Chapter, *P24x/EN IN* for detailed information).

The following tests will be realized with the **VT Connecting Mode** set to **3 VT** which is the most used configuration.

Apply rated voltage to each voltage transformer input in turn, checking its magnitude using a multimeter. Refer to Table 13 for the corresponding reading in the relays MEASUREMENTS 1 column and record the value displayed.

Menu cell	Voltage applied to	
	P241 (40TE)	P242 (60TE), P243 (80TE)
[021A: MEASUREMENTS 1, VAN Magnitude]	C19 - C22	D19 - D22
[021C: MEASUREMENTS 1, VBN Magnitude]	C20 - C22	D20 - D22
[021E: MEASUREMENTS 1, VCN Magnitude]	C21 - C22	D21 - D22
[0220: MEASUREMENTS 1, VN Measured Mag]	C23 - C24	D23 - D24

Table 13: Voltage input terminals

The measured voltage values displayed on the relay LCD or a portable PC connected to the front communication port will either be in primary or secondary volts. If cell [0D02: MEASURE'T SETUP, Local Values] is set to **Primary**, the values displayed should be equal to the applied voltage multiplied by the corresponding voltage transformer ratio set in the **VT and CT RATIOS** menu column (see Table 14). If cell [0D02: MEASURE'T SETUP, Local Values] is set to 'Secondary', the value displayed should be equal to the applied voltage.

Note: If a PC connected to the relay via the rear communications port is being used to display the measured voltage, the process will be similar. However, the setting of cell [0D03: MEASURE'T SETUP, Remote Values] will determine whether the displayed values are in primary or secondary volts.

The measurement accuracy of the relay is ±1%. However, an additional allowance must be made for the accuracy of the test equipment being used.

Menu cell	Corresponding VT ratio (in 'VT and CT RATIO column (0A) of menu)
[021A: MEASUREMENTS 1, VAN Magnitude] [021C: MEASUREMENTS 1, VBN Magnitude] [021E: MEASUREMENTS 1, VCN Magnitude]	[0A01: Main VT Primary] [0A02: Main VT Sec'y]

Table 14: VT ratio settings

6 SETTING CHECKS

The setting checks ensure that all of the application-specific relay settings (that is both the relays function and programmable scheme logic settings) for the particular installation have been correctly applied to the relay.

If the application-specific settings are not available, ignore sections 6.1 and 6.2

Note: The trip circuit should remain isolated during these checks to prevent accidental operation of the associated circuit breaker.

6.1 Apply application-specific settings

There are two methods of applying the settings:

- Transferring them from a pre-prepared setting file to the relay using a portable PC running the appropriate software (MiCOM S1 Studio) using the relays front EIA(RS)232 port, located under the bottom access cover, or the first rear communications port (Courier protocol with a KITZ protocol converter connected), or the second rear communications port. This method is preferred for transferring function settings as it is much faster and there is less margin for error. If programmable scheme logic other than the default settings with which the relay is supplied is to be used then this is the only way of changing the settings.
- If a setting file has been created for the particular application and provided on a diskette, this will further reduce the commissioning time and should always be the case where application-specific programmable scheme logic is to be applied to the relay.
- Enter them manually via the relays operator interface. This method is not suitable for changing the programmable scheme logic.

It is essential that where the installation needs application-specific Programmable Scheme Logic that the appropriate .psl file is downloaded (sent) to the relay, for each and every setting group that will be used. If the user fails to download the required .psl file to any setting group that may be brought into service, then factory default PSL will still be resident. This may have severe operational and safety consequences.

6.2 Check application-specific settings

CM

The settings applied should be carefully checked against the required application-specific settings to ensure they have been entered correctly. However, this is not considered essential if a customer-prepared setting file on diskette has been transferred to the relay using a portable PC.

There are two methods of checking the settings:

- Extract the settings from the relay using a portable PC running the appropriate software (MiCOM S1 Studio) using the front EIA(RS)232 port, located under the bottom access cover, or the first rear communications port (Courier protocol with a KITZ protocol converter connected), or the second rear communications port. Compare the settings transferred from the relay with the original written application-specific setting record. (For cases where the customer has only provided a printed copy of the required settings but a portable PC is available).
- Step through the settings using the relays operator interface and compare them with the original application-specific setting record.

Unless previously agreed to the contrary, the application-specific programmable scheme logic will not be checked as part of the commissioning tests.

Due to the versatility and possible complexity of the programmable scheme logic, it is beyond the scope of these commissioning instructions to detail suitable test procedures. Therefore, when programmable scheme logic tests must be performed, written tests which will satisfactorily demonstrate the correct operation of the application-specific scheme logic should be devised by the Engineer who created it. These should be provided to the Commissioning Engineer together with the diskette containing the programmable scheme logic setting file.

6.3 Demonstrate correct relay operation

Tests 5.2.9 and 5.2.10 have already demonstrated that the relay is within calibration; therefore the purpose of these tests is as follows:

- To determine that the primary protection function of the P241/2/3 relay, the thermal protection, can trip according to the correct application settings.
- To determine that the differential protection function of the P243 relay can trip according to the correct application settings.
- To verify correct setting of the sensitive earth fault protection (P241/2/3).
- To verify correct assignment of the trip contacts, by monitoring the response to a selection of fault injections.

6.3.1 Motor differential protection (P243)

To avoid spurious operation of any other protection elements all protection elements except the motor differential protection should be disabled for the duration of the differential element tests. This is done in the relay's CONFIGURATION column. Make a note of which elements need to be re-enabled after testing.

For testing the biased differential protection select the **Percentage Bias** setting in the Diff Function, Differential menu and perform the tests described in section 6.3.1.2, 6.3.1.3 and 6.3.2. For testing the high impedance differential protection select the **High Impedance** setting in the Diff Function, Differential menu and perform the tests described in section 6.3.2.

The P243 motor differential protection has three elements, one for each phase. The biased differential protection uses the maximum bias current in the three phases to bias the elements. The detailed bias characteristic is described in sub-document - Installation. The following instructions are for testing the bias characteristic of the B phase element. The bias current is applied to the A phase element.

6.3.1.1 Connect the test circuit

The following tests require a variable transformer and two resistors connected as shown in Figure 3. Alternatively an injection test set can be used to supply Ia and Ib currents.

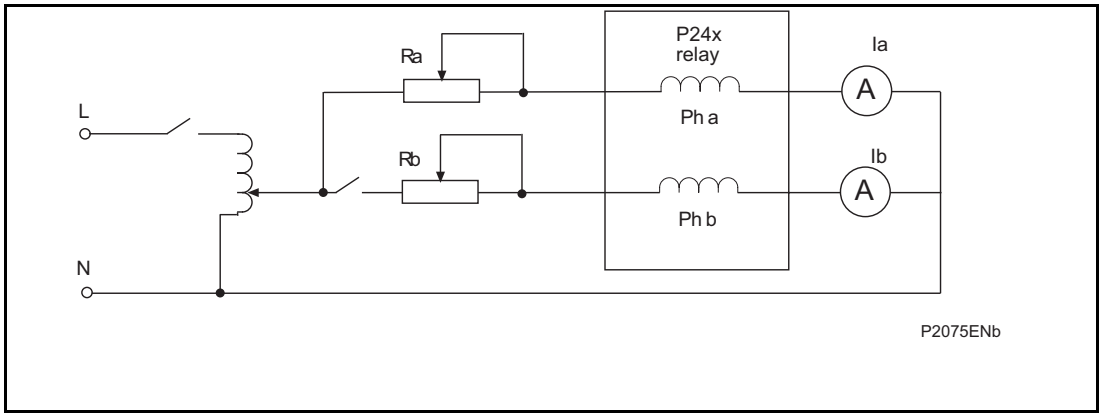

Figure 3: Connection for testing

For the biased differential protection a current is injected into the A phase IA-2 input,

F3 - F2 (1A), F1 - F2 (5A), which is used as the bias current, IBias = (IA + IA-2)/2 = IA-2/2 as IA=0. Another current is injected into the B phase IB-2 input F6 - F5 (1A), F4 - F5 (5A) which is used as the differential current, Differential = IB-2 - IB = IB-2 as IB=0. Ia is always greater than Ib.

6.3.1.2 Biased differential protection lower slope

If three LEDs have been assigned to give phase segregated trip information, Diff Trip A, Diff Trip B and Diff Trip C (DDB 315, 316, 317), these may be used to indicate correct per-phase operation. If not, monitor options will need to be used - see the next paragraph.

CM

Go to the COMMISSION TESTS column in the menu, scroll down and change cells [0F05: Monitor Bit 1] to 315, [0F06: Monitor Bit 2] to 316 and [0F07: Monitor Bit 3] to 317. Cell [0F04: Test Port Status] will now appropriately set or reset the bits that now represent Phase A Trip (DDB 315), Phase B Trip (DDB 316) and Phase C Trip (DDB 317) with the rightmost bit representing Phase A Trip. From now on you should monitor the indication of [0F04: Test Port Status].

Adjust the variac and the resistor to inject 1 pu into IA-2 to give a bias current of 0.5 pu in the A-phase.

Note: 1 pu = 1 A into terminals, F3 - F2 for 1 A applications; or 1 pu = 5 A into terminals F1-F2 for 5 A applications.

The relay will trip and any contacts associated with the A-phase will operate, and bit 1 (rightmost) of [0F04: Test Port Status] will be set to 1. Some LEDs, including the yellow alarm LED, will come on, but ignore them for the moment.

Slowly increase the current in the B-phase IB-2 input F6 - F5 (1A), F4 - F5 (5 A) until phase B trips (Bit 2 of [0F04: Test Port Status] is set to 1). Record the phase B current magnitude and check that it corresponds to the information below. Switch OFF the ac supply and reset the alarms.

Bias current (IA-2/2)		Differential current (IB)	
Phase	Magnitude	Phase	Magnitude
A	0.5 pu	B	0.05 pu +/-10%

Assumption: Is1 = 0.05 pu, k1 = 0%, Is2 = 1.2 pu

For other differential settings the formula below can be used (enter k1 slope in pu form, i.e. percentage/100):

B phase operate current is (Is1 + IBias x k1) pu +/- 10%

6.3.1.3 Biased differential protection upper slope

Repeat the test in 6.3.1.2 with the A phase, IA-2, current set to be 3.4 pu (Ibias = 1.7 pu).

Slowly increase the current in the B phase until phase B trips (bit 2 of [0F04: Test Port Status] is set to 1). Record the phase B current magnitude and check that it corresponds to the information below.

Switch OFF the ac supply and reset the alarms.

Bias current (IA-2/2)		Differential current (IB)	
Phase	Magnitude	Phase	Magnitude
A	1.7 pu	B	0.8 pu +/-20%

Assumption: Is1 = 0.05 pu, k1 = 0%, Is2 = 1.2 pu, k2 =150%as above

For other differential settings the formula below can be used (enter k1 and k2 slopes in pu form, i.e. percentage/100):

Operate current is [(IBias x k2) + {(k1 – k2) x Is2 } + Is1] pu +/- 20%

Note: Particularly for 5 A applications the duration of current injections should be short to avoid overheating of the variac or injection test set.

6.3.2 Motor differential operation and contact assignment

6.3.2.1 Phase A

Retaining the same test circuit as before, prepare for an instantaneous injection of 4 x I_{s1} pu current in the A phase, with no current in the B phase (B phase switch open). Connect a timer to start when the fault injection is applied, and to stop when the trip occurs.

Determine which output relay has been selected to operate when a Diff. Trip occurs by viewing the relay's programmable scheme logic. The programmable scheme logic can only be changed using the appropriate software. If this software is not available then the default output relay allocations will still be applicable. In the default PSL, relay 3 is the designated protection trip contact and DDB 371 Any Trip is assigned to this contact.

Ensure that the timer is reset.

Apply a current of 4 x the setting in cell [3002: GROUP 1 DIFFERENTIAL, Diff Is1] to the relay and note the time displayed when the timer stops.

After applying the test check the red trip led and yellow alarm led turns on when the relay operates. Check 'Alarms/Faults Present - Tripped Phase A, Diff Trip' is on the display. Reset the alarms.

Three Pole Tripping	DDB 318	Diff Trip
Single Pole Tripping	DDB 315:	Diff Trip A
	DDB 316:	Diff Trip B
	DDB 317:	Diff Trip C

6.3.2.2 Phase B

Reconfigure the test equipment to inject fault current into the B phase. Repeat the test in 6.3.2.1, this time ensuring that the breaker trip contacts relative to B phase operation close correctly. Record the phase B trip time. Check the red trip led and yellow alarm led turns on when the relay operates. Check 'Alarms/Faults Present - Tripped Phase B, Diff Trip' is on the display. Reset the alarms.

6.3.2.3 Phase C

Repeat 6.3.2.2 for the C phase.

The average of the recorded operating times for the three phases should be less than 30 ms. Switch OFF the ac supply and reset the alarms.

On completion of the tests any protection elements which were disabled for testing purposes must have their original settings restored in the CONFIGURATION column.

6.3.3 Sensitive earth fault protection

This test, performed on stage 1 of the sensitive earth fault protection function in setting Group 1, demonstrates that the relay is operating correctly at the application-specific settings.

It is not considered necessary to check the boundaries of operation where cell [3202: SENSITIVE E/F GROUP 1, ISEF>1 Direction] is set to Directional Fwd as the test detailed already confirms the correct functionality between current and voltage inputs, processor and outputs and earlier checks confirmed the measurement accuracy is within the stated tolerance.

To avoid spurious operation of any other protection elements all protection elements except the overcurrent protection should be disabled for the duration of the overcurrent element tests. This is done in the relay's CONFIGURATION column. Make a note of which elements need to be re-enabled after testing.

6.3.3.1 Connect the test circuit

Determine which output relay has been selected to operate when a ISEF>1 trip occurs by viewing the relay's programmable scheme logic.

The programmable scheme logic can only be changed using the appropriate software. If this software has not been available then the default output relay allocations will still be applicable.

If ISEF>1 trip (DDB 261) is not mapped directly to an output relay in the programmable scheme logic, output relay 3 should be used for the test as it operates for any trip condition, DDB 371 Any Trip is assigned to this contact.

The associated terminal numbers can be found from the external connection diagrams in the Installation chapter, *P24x/EN IN*.

Connect the output relay so that its operation will trip the test set and stop the timer.

Connect the current output of the test set to the 'ISensitive' phase current transformer input of the relay (terminals C15 – C14 (1 A, 40TE case), D15 – D14 (1 A, 60TE case), F15 – F14 (1 A, 80TE case), C13 – C14 (5 A, 40TE case), D13 – D14 (5 A, 60TE case) F13 – F14 (5 A, 80TE case)).

Ensure that the timer will start when the current is applied to the relay.

6.3.3.2 Perform the test

Ensure that the timer is reset.

Apply a current of twice the setting in cell [3203: GROUP 1 SENSITIVE E/F, □SEF>1 Current Set] to the relay and note the time displayed when the timer stops.

Check the red trip led and yellow alarm led turns on when the relay operates. Check 'Alarms/Faults Present - Started Phase N, Tripped Phase N, Start ISEF>1, Trip ISEF>1' is on the display. Reset all alarms.

6.3.3.3 Check the operating time

Check that the operating time recorded by the timer is within the range shown in Table 15.

Note: Except for the definite time characteristic, the operating times given in Table 14 are for a time multiplier or time dial setting of 1. Therefore, to obtain the operating time at other time multiplier or time dial settings, the time given in Table 14 must be multiplied by the setting of cell [3205: GROUP 1 SENSITIVE E/F, ISEF>1 TMS] for IEC and UK characteristics or cell [3207: GROUP 1 SENSITIVE E/F, ISEF>1 Time Dial] for IEEE and US characteristics.

In addition, for definite time and inverse characteristics there is an additional delay of up to 0.02 second and 0.08 second respectively that may need to be added to the relays acceptable range of operating times.

For all characteristics, allowance must be made for the accuracy of the test equipment being used.

CM

Characteristic	Operating time at twice current setting and time multiplier/time dial setting of 1.0	
	Nominal (seconds)	Range (seconds)
DT	[3504: ISEF>1 T Delay] setting	Setting ±5%
IEC S Inverse	10.03	9.53 - 10.53
IEC V Inverse	13.50	12.83 - 14.18
IEC E Inverse	26.67	25.34 - 28
UK LT Inverse	120.00	114.00 - 126.00
IEEE M Inverse	3.8	3.61 - 3.99
IEEE V Inverse	7.03	6.68 - 7.38
IEEE E Inverse	9.52	9.04 - 10
US Inverse	2.16	2.05 - 2.27
US ST Inverse	12.12	11.51 - 12.73

Table 15: Characteristic operating times for I>1

On completion of the tests any protection elements that were disabled for testing purposes must have their original settings restored in the CONFIGURATION column.

6.3.4 Thermal overload protection

P24x relays model the time-current thermal characteristic of a motor by internally generating a thermal replica of the machine. The aim of this test is to check :

- The presence of a thermal alarm as soon as the thermal state reaches the set threshold
- The time to a thermal trip in case of a thermal overload
- The measurements of the thermal load and thermal state

The settings of this function are listed in the **THERMAL OVERLOAD, GROUP 1** menu column. Check these settings before the test.

To avoid spurious operation of any other protection elements all protection elements except the thermal protection should be disabled for the duration of the thermal element tests. This is done in the relay's CONFIGURATION column. Make a note of which elements need to be re-enabled after testing.

6.3.4.1 Connect the test circuit

Determine which output relay has been selected to operate when a thermal trip occurs by viewing the relays programmable scheme logic.

The programmable scheme logic can only be changed using the appropriate software. If this software has not been available then the default output relay allocations will still be applicable.

If the **Thermal Trip** (DDB 236) is not mapped directly to an output relay in the programmable scheme logic, output relay 3 should be used for the test as it operates for any trip condition, DDB 371 Any Trip is assigned to this contact. The **Thermal Alarm** (DDB 178) should be mapped directly to an output relay in the programmable scheme logic if this feature is to be tested.

The associated terminal numbers can be found from the external connection diagrams in the Installation chapter, *P24x/EN IN*.

Connect the output relay so that its operation will trip the test set and stop the timer.

Connect the current output of the test set to the **A** phase current transformer input of the relay (terminals C3 – C2 (1 A, 40TE case), D3 – D2 (1 A, 60TE case), F3 – F2 (1 A, 80TE case), C1 – C2 (5 A, 40TE case), D1 – D2 (5 A, 60TE case) F1 – F2 (5 A, 80TE case)).

Ensure that the timer will start when the current is applied to the relay.

Note : If the timer does not start when the current is applied, the connections may be incorrect for the direction of operation set. Try again with the current connections reversed.

6.3.4.2 Perform the test

Ensure that the timer on the test set is reset.

Ensure that the thermal state is reset (see in cell [0402: MEASUREMENTS 3, Thermal State]: if not, this reset can be done through the cell [0404: MEASUREMENTS 3, Reset Th State] by selecting YES.

Check the position of the interrupting device by viewing the status of the two opto-inputs (52a and 52b status inputs) used to indicate the device position. The 52a input must be energized to simulate the closed position of the interrupting device to enable the thermal protection heating time constants. The cooling time constant is used when the interrupting device is open.

Apply a current of twice the setting [in cell 3001 : THERMAL OVERLOAD, GROUP1, Ith Current Set] to the relay and note the time displayed when the timer stops. If it is required to repeat the test, make sure to disable Thermal Lockout [in cell 3009]. Also make sure to disable the inhibit during start setting **Inh Trip Dur St** [in cell 300B]. Since most portable secondary injection test sets have limited current output capability, it is suggested to change the $\mathbf{I_{th}}$ **Current Set** to 1 A (after the as found value is recorded) and use the 1 A phase current input terminals. In order to save time during testing, it is advisable to set all the thermal time constants to 5 minutes.

Ensure that the thermal state is reset to 0 (see cell [0402 : MEASUREMENTS 3, ThermalState]. If not, the thermal state can be reset through the cell [0404: MEASUREMENTS 3, Reset Th State] by selecting YES.

On completion of the tests any protection elements that were disabled for testing purposes must have their original settings restored in the CONFIGURATION column.

6.3.4.3 Verify the operating time

This test is done by a single-phase injection on the A phase current input, it results in that the relay sees equal current magnitudes for both positive and negative phase sequence quantities. Upon injection of a single phase current value equal to Iinject, the relay will see current magnitudes of Iinject/3 for both positive and negative phase sequences quantities and Iinject for I_{rms}. The equivalent thermal current value I_{eq} calculated by the relay will be given by the following:

$$\mathbf{I_{eq} = \sqrt{(I_1^2 + K\, I_2^2)}}$$

Note: This equation is used in software version A4.x(09) and before

or

$$\mathbf{I_{eq} = \sqrt{(I_{rms}^2 + K\, I_2^2)}}$$

Note: This equation is used in software version B1.0(20) or later

Where :

I_1 = Positive sequence current

I_{rms} : root mean square current

I_2 : negative sequence current

K is a constant proportional to the thermal capacity of the motor
(**K Coefficient** default setting = 3)

The equivalent motor heating current assuming K = 3 for (1) becomes:

$$I_{eq} = \sqrt{[\, 4 * (I_{inject} / 3)\, 2\,]}$$

$$= (\mathbf{2}\, I_{inject} / 3) \qquad (3)$$

The equivalent motor heating current assuming K = 3 for (2) becomes:

$$I_{eq} = \sqrt{[\, 4/3 * (I_{inject})\, 2\,]}$$

$$= (\mathbf{2}\, I_{injected} \mathbf{/ \sqrt{3}}) \qquad (4)$$

The equation used to calculate the trip time at 100% of thermal state is:

$$\mathbf{t = \tau\, ln((k^2 - A)/(k^2 - 1))}$$

where the value of τ (thermal time constant) depends on the current value absorbed by the motor :

$\tau = T_1$ (**Thermal Const T1**) if $I_{th} < I_{eq} <= 2*I_{th}$ overload time constant

$\tau = T_2$ (**Thermal Const T2**) if $I_{eq} > 2*I_{th}$ start-up time constant

τ = Tr (**Cooling Const Tr**) if interrupting device is opened cooling time constant

I_{th} = thermal setting in cell [3001 : THERMAL OVERLOAD, GROUP1, **I_{th} Current Set**]

$k = I_{eq} / I_{th}$ = measured thermal load (or thermal capacity)

A = initial state of the machine, in percentage of the thermal state = 0 for this test.

The time to a thermal trip becomes :

CM

$$t = \tau \ln(k^2/(k^2-1))$$

The equation used to calculate the time to the thermal alarm is :

$$talarm = \tau \ln(k^2/(k^2-\text{Thermal Alarm }/100))$$

Thermal alarm = (**Thermal Alarm**) thermal alarm setting in percentage of the thermal state

Since a current of twice the setting I_{th} is applied, consequently one of the following thermal constants will be used :

- T1 (overload time constant) if the interrupting device is closed.
- T_r (cooling time constant) if the interrupting device is opened.

Apply a current of twice the setting [in cell 3001: THERMAL OVERLOAD, GROUP1, I_{th} Current Set] to the relay and note the time displayed when the timer stops. Check that the operating time recorded by the timer is within the range (calculated trip time ±5% or 40 ms whichever is the greater). For all characteristics, allowance must be made for the accuracy of the test equipment being used.

Example

For **I_{th} Current Set** = 0.5 A and **A** phase I_{inject} = 2 A, T1 = 5 mins

Using (3) $k = I_{eq} / I_{th} = (2 \times 2 /3) / 0.5 = 8/3$ A

top = $5 \times 60 \ln ((8/3)^2 / ((8/3)^2 - 1)) = 45.465$ s

Using (4) $k = I_{eq} / I_{th} = (2 \times 2 /\sqrt{3}) / 0.5 = 8/\sqrt{3}$ A

top = $5 \times 60 \ln ((8/\sqrt{3})^2 / ((8/\sqrt{3})^2 - 1)) = 14.4$ s

For a thermal alarm setting = 90% using (3) $t_{alarm} = 40.59$ s

For a thermal alarm setting = 90% using (4) $t_{alarm} = 12.96$ s

If the injection is done equally on the 3 phases current transformers, the equation used to evaluate I_{eq} will be:

$$I_{eq} = \sqrt{(I_1^2 + K I_2^2)}$$

Note: This equation is used in software version A4.x(09) and before

or

$$I_{eq} = \sqrt{(I_{rms}^2 + K I_2^2)}$$

Note: This equation is used in software version B1.0(20) or later

And provided the phase currents are balanced, then I2 will be zero.

On completion of the tests any protection elements that were disabled for testing purposes must have their original settings restored in the CONFIGURATION column.

7 ON-LOAD CHECKS

The following on-load measuring checks ensure the external wiring to the current and voltage inputs is correct but can only be carried out if there are no restrictions preventing the energization of the plant being protected.

Remove all test leads, for example temporary shorting leads, and replace any external wiring that has been removed to allow testing.

If you have disconnected any of the external wiring from the relay in order to perform any of the foregoing tests, you should ensure that all connections are replaced in accordance with the relevant external connection or scheme diagram.

7.1 Voltage connections

Using a multimeter measure the voltage transformer secondary voltages to ensure they are correctly rated. Check that the system phase rotation is correct using a phase rotation meter.

Compare the values of the secondary phase voltages with the relays measured values, which can be found in the MEASUREMENTS 1 menu column.

If cell [0D02: MEASURE'T SETUP, Local Values] is set to **Secondary**, the values displayed on the relay LCD or a portable PC connected to the front EIA(RS)232 communication port should be equal to the applied secondary voltage. The values should be within 1% of the applied secondary voltages. However, an additional allowance must be made for the accuracy of the test equipment being used.

If cell [0D02: MEASURE'T SETUP, Local Values] is set to **Primary**, the values displayed should be equal to the applied secondary voltage multiplied the corresponding voltage transformer ratio set in the **CT & VT RATIOS** menu column (see Table 16). Again the values should be within 1% of the expected value, plus an additional allowance for the accuracy of the test equipment being used.

Voltage	Cell in MEASUREMENTS 1 Column (02)	Corresponding VT ratio (in 'VT and CT RATIO column (0A) of menu)
V_{AB}	[0214: VAB Magnitude]	[0A01: Main VT Primary] [0A02: Main VT Sec'y]
V_{BC}	[0216: VBC Magnitude]	
V_{CA}	[0218: VCA Magnitude]	
V_{AN}	[021A: VAN Magnitude]	
V_{BN}	[021C: VBN Magnitude]	
V_{CN}	[021E: VCN Magnitude]	
Vremanent	[0222: Vr AntiBacks Magnitude]	
V_N	[0220: VN Measured Mag]	[0A05: NVD VT Primary] [0A06: NVD VT Sec'y]

Table 16: Measured voltages and VT ratio settings

7.2 Current connections

Measure the current transformer secondary values for each input using a multimeter connected in series with corresponding relay current input.

Check that the current transformer polarities are correct by measuring the phase angle between the current and voltage, either against a phase meter already installed on site and known to be correct or by determining the direction of power flow by contacting the system control center.

Ensure the current flowing in the neutral circuit of the current transformers is negligible.

Compare the values of the secondary phase currents and phase angle with the relay's measured values, which can be found in the MEASUREMENTS 1 menu column.

Note: Under normal load conditions the earth fault function will measure little, if any, current. It is therefore necessary to simulate a phase to neutral fault. This can be achieved by temporarily disconnecting one or two of the line current transformer connections to the relay and shorting the terminals of these current transformer secondary windings.

Check that the IA/IB/IC Differential currents measured on the P243 relay are less than 10% of the IA/IB/IC Bias currents, see the Measurements 3 menu. Check that the I2 Magnitude negative phase sequence current measured by the relay is not greater than expected for the particular installation, see the Measurements 1 menu. Check that the active and reactive power measured by the relay are correct, see the Measurements 2 menu. The power measurement modes are described in the Measurements and Recording chapter, *P24x/EN MR*.

If cell [0D02: MEASURE'T SETUP, Local Values] is set to **Secondary**, the currents displayed on the relay LCD or a portable PC connected to the front EIA(RS)232 communication port should be equal to the applied secondary current. The values should be within 1% of the applied secondary currents. However, an additional allowance must be made for the accuracy of the test equipment being used.

If cell [0D02: MEASURE'T SETUP, Local Values] is set to **Primary**, the currents displayed should be equal to the applied secondary current multiplied by the corresponding current transformer ratio set in **CT & VT RATIOS** menu column (see Table 16). Again the values should be within 1% of the expected value, plus an additional allowance for the accuracy of the test equipment being used.

Note: If a P241/2/3 relay is applied with a single dedicated current transformer for the earth fault function, it may not be possible to check the relay's measured values as the neutral current will be almost zero.

8 FINAL CHECKS

The tests are now complete.

Remove all test or temporary shorting leads.

If you have disconnected any of the external wiring from the relay in order to perform the wiring verification tests, you should ensure that all connections are replaced in accordance with the relevant external connection or scheme diagram.

Ensure that the relay has been restored to service by checking that cell [0F0D: COMMISSIONING TESTS, Test Mode] is set to **Disabled**.

If the relay is in a new installation or the circuit breaker has just been maintained, the circuit breaker maintenance and current counters should be zero. These counters can be reset using cell [0606: CB CONDITION, Reset All Values]. If the required access level is not active, the relay will prompt for a password to be entered so that the setting change can be made.

If the menu language has been changed to allow accurate testing it should be restored to the customer's preferred language.

If an MMLG test block is installed, remove the MMLB01 test plug and replace the MMLG cover so that the protection is put into service.

Ensure that all event records, fault records, disturbance records, alarms and LEDs have been reset before leaving the relay.

If applicable, replace the secondary front cover on the relay.

9 COMMISSIONING TEST RECORD

Date:		Engineer:	
Station:		Circuit:	
		System Frequency:	Hz
VT Ratio:	/ V	CT Ratio (tap in use):	/ A

Front plate information

Motor protection relay	MiCOM P24x
Model number	
Serial number	
Rated current In	1 A ☐ 5 A ☐
Rated voltage Vn	
Auxiliary voltage Vx	

Test equipment used

This section should be completed to allow future identification of protective devices that have been commissioned using equipment that is later found to be defective or incompatible but may not be detected during the commissioning procedure.

Overcurrent test set	Model: Serial No:	
Phase angle meter	Model: Serial No:	
Phase rotation meter	Model: Serial No:	
Insulation tester	Model: Serial No:	
Setting software:	Type: Version:	

Have all relevant safety instructions been followed? Yes ☐ No ☐

5. PRODUCT CHECKS

5.1 With the relay de-energized

5.1.1 Visual inspection

Relay damaged?	Yes	☐	No	☐
Rating information correct for installation?	Yes	☐	No	☐
Case earth installed?	Yes	☐	No	☐

CM

5.1.2	Current transformer shorting contacts close?	Yes ☐ No ☐ Not checked ☐	
5.1.3	Insulation resistance >100 MΩ at 500 V dc	Yes ☐ No ☐ Not tested ☐	
5.1.4	External wiring		
	Wiring checked against diagram?	Yes ☐ No ☐	
	Test block connections checked?	Yes ☐ No ☐ N/A ☐	
5.1.5	Watchdog contacts (auxiliary supply off)		
	Terminals 11 and 12 Contact closed?	Yes ☐ No ☐	
	Contact resistance	Ω	
		Not measured ☐	
	Terminals 13 and 14 Contact open?	Yes ☐ No ☐	
5.1.6	Measured auxiliary supply	V ac/dc	

5.2 With the relay energized

5.2.1	Watchdog contacts (auxiliary supply on)		
	Terminals 11 and 12 Contact open?	Yes ☐ No ☐	
	Terminals 13 and 14 Contact closed?	Yes ☐ No ☐	
	Contact resistance	Ω	
		Not measured ☐	
5.2.2	LCD front panel display		
	LCD contrast setting used		
5.2.3	Date and time		
	Clock set to local time?	Yes ☐ No ☐	
	Time maintained when auxiliary supply removed?	Yes ☐ No ☐	
5.2.4	Light emitting diodes		
	Relay healthy (green) LED working?	Yes ☐ No ☐	
	Alarm (yellow) LED working?	Yes ☐ No ☐	
	Out of service (yellow) LED working?	Yes ☐ No ☐	
	Trip (red) LED working?	Yes ☐ No ☐	
	All 8 (P241), 18 (P242/3) programmable LEDs working?	Yes ☐ No ☐	
5.2.5	Field supply voltage		
	Value measured between terminals 7 and 9	V dc	
	Value measured between terminals 8 and 10	V dc	
5.2.6	Input opto-isolators		
	Opto input 1 working?	Yes ☐ No ☐	
	Opto input 2 working?	Yes ☐ No ☐	
	Opto input 3 working?	Yes ☐ No ☐	
	Opto input 4 working?	Yes ☐ No ☐	
	Opto input 5 working?	Yes ☐ No ☐	
	Opto input 6 working?	Yes ☐ No ☐	

CM

	Opto input 7	working?		Yes ☐ No ☐
	Opto input 8	working?		Yes ☐ No ☐
	Opto input 9	working?		Yes ☐ No ☐ N/A ☐
	Opto input 10	working?		Yes ☐ No ☐ N/A ☐
	Opto input 11	working?		Yes ☐ No ☐ N/A ☐
	Opto input 12	working?		Yes ☐ No ☐ N/A ☐
	Opto input 13	working?		Yes ☐ No ☐ N/A ☐
	Opto input 14	working?		Yes ☐ No ☐ N/A ☐
	Opto input 15	working?		Yes ☐ No ☐ N/A ☐
	Opto input 16	working?		Yes ☐ No ☐ N/A ☐
5.2.7	Output relays			
	Relay 1	working?		Yes ☐ No ☐
		Contact resistance		Ω Not measured ☐
	Relay 2	working?		Yes ☐ No ☐
		Contact resistance		Ω Not measured ☐
	Relay 3	working?		Yes ☐ No ☐
		Contact resistance		Ω Not measured ☐
	Relay 4	working?		Yes ☐ No ☐
		Contact resistance	(N/C)	Ω
			(N/O)	Not measured ☐ Ω Not measured ☐
	Relay 5	working?		Yes ☐ No ☐
		Contact resistance	(N/C)	Ω
			(N/O)	Not measured ☐ Ω Not measured ☐
	Relay 6	working?		Yes ☐ No ☐
		Contact resistance	(N/C)	Ω
			(N/O)	Not measured ☐ Ω Not measured ☐
	Relay 7	working?		Yes ☐ No ☐
		Contact resistance	(N/C)	Ω
			(N/O)	Not measured ☐

Relay 8	working?		Yes ☐ No ☐ N/A ☐
	Contact resistance	(N/C)	Ω Not measured ☐
		(N/O)	Ω Not measured ☐
Relay 9	working?		Yes ☐ No ☐ N/A ☐
	Contact resistance		Ω Not measured ☐
			Ω Not measured ☐
Relay 10	working?		Yes ☐ No ☐ N/A ☐
	Contact resistance		Ω Not measured ☐
Relay 11	working?		Yes ☐ No ☐ N/A ☐
	Contact resistance	(N/C)	Ω Not measured ☐
		(N/O)	Ω Not measured ☐
Relay 12	working?		Yes ☐ No ☐ N/A ☐
	Contact resistance	(N/C)	Ω Not measured ☐
		(N/O)	Ω Not measured ☐
Relay 13	working?		Yes ☐ No ☐ N/A ☐
	Contact resistance	(N/C)	Ω Not measured ☐
		(N/O)	Ω Not measured ☐
Relay 14	working?		Yes ☐ No ☐ N/A ☐
	Contact resistance	(N/C)	Ω Not measured ☐
		(N/O)	Ω Not measured ☐
Relay 15	working?		Yes ☐ No ☐ N/A ☐
	Contact resistance	(N/C)	Ω Not measured ☐
		(N/O)	Ω Not measured ☐

	Relay 16	working?		Yes ☐ No ☐ N/A ☐
		Contact resistance	(N/C)	Ω Not measured ☐
			(N/O)	Ω Not measured ☐

5.2.8 RTD inputs

Resistor tolerance

RTD 1 reading	[04C01: RTD 1 Label]	%
RTD 2 reading	[04C02: RTD 2 Label]	°C
RTD 3 reading	[04C03: RTD 3 Label]	°C
RTD 4 reading	[04C04: RTD 4 Label]	°C
RTD 5 reading	[04C05: RTD 5 Label]	°C
RTD 6 reading	[04C06: RTD 6 Label]	°C
RTD 7 reading	[04C07: RTD 7 Label]	°C
RTD 8 reading	[04C08: RTD 8 Label]	°C
RTD 9 reading	[04C09: RTD 9 Label]	°C
RTD 10 reading	[04C0A: RTD 10 Label]	°C

5.2.9 Current loop inputs

Analog input Range	0 - 1 mA ☐ 0 - 10 mA ☐ 0 - 20 mA ☐ 4 - 20 mA ☐
Analog Input 1 reading at 50% maximum range [4D01: CLI1 Input Label]	
Analog Input 2 reading at 50% maximum range [4D02: CLI2 Input Label]	
Analog Input 3 reading at 50% maximum range [4D03: CLI3 Input Label]	
Analog Input 4 reading at 50% maximum range [4D04: CLI4 Input Label]	

5.2.10 Current loop outputs

	0 - 1 mA ☐ 0 - 10 mA ☐ 0 - 20 mA ☐ 4 - 20 mA ☐
Analog Output Range	mA
Analog Output 1 current at 50% of rated output	mA
Analog Output 2 current at 50% of rated output	mA
Analog Output 3 current at 50% of rated output	mA
Analog Output 4 current at 50% of rated output	mA

CM

5.2.11 First rear communications port

Communication standard	K-Bus ☐ MODBUS ☐ IEC 60870-5-103 ☐ IEC 61850 ☐
Communications established?	Yes ☐ No ☐
Protocol converter tested?	Yes ☐ No ☐ N/A ☐

5.2.12 Second rear communications port

Communication port configuration	K-Bus ☐ EIA(RS)485 ☐ EIA(RS)232 ☐
Communications established?	Yes ☐ No ☐
Protocol converter tested?	Yes ☐ No ☐ N/A ☐

5.2.13 Current inputs

Displayed current	Primary ☐ Secondary ☐
Phase CT ratio ([Phase CT Primary] / [Phase CT Sec'y])	N/A ☐
SEF CT ratio ([SEF CT Primary] / [SEF CT Sec'y])	N/A ☐

Input CT	Applied Value	Displayed Value
IA	A	A
IB	A	A
IC	A	A
IN	A N/A ☐	A N/A ☐
ISEF	A	A
IA (2)	A N/A ☐	A N/A ☐
IB (2)	A N/A ☐	A N/A ☐
IC (2)	A N/A ☐	A N/A ☐

5.2.14 Voltage inputs

Displayed voltage	Primary ☐ Secondary ☐
Main VT ratio ([Main VT Primary] / [Main VT Sec'y.])	N/A ☐
NVD VT ratio ([NVD VT Primary] / [NVD VT Secondary])	N/A ☐

CM

Input VT	Applied Value	Displayed value
Va	V	V
Vb	V	V
Vc	V	V
VN	V	V

6. SETTING CHECKS

6.1	Application-specific function settings applied?	Yes ☐ No ☐
	Application-specific programmable scheme logic settings applied?	Yes ☐ No ☐ N/A ☐
6.2	Application-specific function settings verified?	Yes ☐ No ☐ N/A ☐
	Application-specific programmable scheme logic tested?	Yes ☐ No ☐ N/A ☐
6.3	Demonstrate correct relay operation	
6.3.1	Motor differential protection (P243)	
6.3.1.2	Motor Differential lower slope pickup	A
6.3.1.3	Motor Differential upper slope pickup	A
6.3.2.1	Motor Differential Phase A contact routing OK?	Yes ☐ No ☐
	Motor Differential Phase A trip time	s
6.3.2.2	Motor Differential Phase B contact routing OK?	Yes ☐ No ☐
	Motor Differential Phase B trip time	s
6.3.2.3	Motor Differential Phase C contact routing OK?	Yes ☐ No ☐
	Motor Differential Phase C trip time	s
	Average trip time, Phases A, B and C	s
6.3.3	Sensitive E/F protection (P241/P242/P243)	
	Protection function timing tested?	Yes ☐ No ☐
	SEF type (set in cell [ISEF>1 Direction])	Directional Fwd ☐ Non-directional ☐
	Applied current	A
	Expected operating time	s
	Measured operating time	s
6.3.4	Thermal Overload protection (P241/P242/P243)	
	Protection function timing tested?	Yes ☐ No ☐
	Thermal Trip	
	Applied current	A
	Expected trip operating time	s
	Measured trip operating time	s
	Thermal Alarm	
	Applied current	A

CM

Expected alarm operating time	s
Measured alarm operating time	s

7.1	VT wiring checked?	Yes ☐ No ☐ N/A ☐	
	Phase rotation correct?	Yes ☐ No ☐	
	Displayed voltage	Primary ☐ Secondary ☐	
	Main VT ratio ([Main VT Primary] / [Main VT Sec'y.])	V	N/A ☐
	NVD VT ratio ([NVD VT Primary] / [NVD VT Secondary])	V	N/A ☐

Voltages	Applied Value	Displayed value
VAN/VAB	V	V
VBN/VBC	V	V
VCN/VCA	V	V
VN	V	V

7.2	CT wiring checked?	Yes ☐ No ☐ N/A ☐	
	CT polarities correct?	Yes ☐ No ☐	
	Displayed current	Primary ☐ Secondary ☐	
	Phase CT ratio ([Phase CT Primary] / [Phase CT Sec'y])	A	N/A ☐
	SEF CT ratio ([SEF CT Primary] / [SEF CT Sec'y])	A	N/A ☐

CM

Currents	Applied Value	Displayed value
IA	A	A
IB	A	A
IC	A	A
IN	A N/A ☐	A N/A ☐
ISEF	A	A
IA (2) P243 only	A N/A ☐	A N/A ☐
IB (2) P243 only	A N/A ☐	A N/A ☐
IC (2) P243 only	A N/A ☐	A N/A ☐

8. FINAL CHECKS

Test wiring removed?	Yes ☐	No ☐		
	N/A ☐			
Disturbed customer wiring re-checked?	Yes ☐	No ☐		
	N/A ☐			
Test mode disabled?	Yes ☐	No ☐		
Circuit breaker operations counter reset?	Yes ☐	No ☐		
	N/A ☐			
Current counters reset?	Yes ☐	No ☐		
	N/A ☐			
Event records reset?	Yes ☐	No ☐		
Fault records reset?	Yes ☐	No ☐		
Disturbance records reset?	Yes ☐	No ☐		
Alarms reset?	Yes ☐	No ☐		
LEDs reset?	Yes ☐	No ☐		
Secondary front cover replaced?	Yes ☐	No ☐		
	N/A ☐			

CM

Commissioning Engineer

Date:

Customer Witness

Date:

10 SETTING RECORD

Date:		Engineer:	
Station:		Circuit:	
		System Frequency:	Hz
VT Ratio:	/ V	CT Ratio (tap in use):	/ A

Front plate information

Motor protection relay	MiCOM P24
Model number	
Serial number	
Rated current In	1 A ☐ 5 A ☐
Rated voltage Vn	
Auxiliary voltage Vx	

Setting groups used

Group 1	Yes ☐	No ☐
Group 2	Yes ☐	No ☐

0000 SYSTEM DATA

0001	Language	English ☐	Francais ☐		
		Deutsche ☐	Espanol ☐		
0002	Password				
0004	Description				
0005	Plant Reference				
0006	Model Number				
0008	Serial Number				
0009	Frequency				
000A	Comms Level				
000B	Relay Address				
0011	Software Ref 1				
00D1	Password Control	Level 0 ☐	Level 1 ☐	Level 2 ☐	
00D2	Password Level 1				
00D3	Password Level 2				

0600 CB CONDITION

0601	CB Operations	
0602	Total IA Broken	
0603	Total IB Broken	

CM

0600 CB CONDITION

0604	Total IC Broken		
0605	CB Operate Time		

0700 CB CONTROL

0701	CB Control by	Disabled	☐	Local	☐
		Remote	☐	Local + Remote	☐
		Opto	☐	Opto + Local	☐
		Opto + Remote	☐	Opto + Rem. + Local	☐
0702	Close Pulse Time				
0703	Trip Pulse Time				
0705	Man Close Delay				

0800 DATE AND TIME

0804	IRIG-B Sync	Disabled	☐	Enabled	☐
0805	IRIG-B Status	Inactive	☐	Active	☐
0806	Battery Status	Dead	☐	Healthy	☐

0900 CONFIGURATION

0902	Setting Group	Select via Menu	☐	Select via Optos	☐
0903	Active Settings	Group 1	☐	Group 2	☐
0907	Setting Group 1	Disabled	☐	Enabled	☐
0908	Setting Group 2	Disabled	☐	Enabled	☐
090B	Thermal Overload	Disabled	☐	Enabled	☐
090C	Short circuit	Disabled	☐	Enabled	☐
090D	Sensitive E/F	Disabled	☐	Enabled	☐
090E	Neg.Seq. O/C	Disabled	☐	Enabled	☐
090F	3PH Volt Check	Disabled	☐	Enabled	☐
0910	Derived E/F	Disabled	☐	Enabled	☐
0914	Stall Detection	Disabled	☐	Enabled	☐
0915	Differential	Disabled	☐	Enabled	☐
0916	Residual O/V NVD	Disabled	☐	Enabled	☐
0917	Limit Nb Starts	Disabled	☐	Enabled	☐
0918	Loss of Load	Disabled	☐	Enabled	☐
0919	Out of Step	Disabled	☐	Enabled	☐
091A	Reverse Power	Disabled	☐	Enabled	☐
091B	Anti-Backspin	Disabled	☐	Enabled	☐
091C	Field Failure	Disabled	☐	Enabled	☐
091D	Volt Protection	Disabled	☐	Enabled	☐
091E	Under Frequency	Disabled	☐	Enabled	☐
091F	RTD Inputs	Disabled	☐	Enabled	☐
0920	CB Fail	Disabled	☐	Enabled	☐
0924	System Config	Invisible	☐	Visible	☐
0925	Input Labels	Invisible	☐	Visible	☐
0926	Output Labels	Invisible	☐	Visible	☐
0927	RTD Labels	Invisible	☐	Visible	☐
0928	CT & VT Ratios	Invisible	☐	Visible	☐

0900 CONFIGURATION

0929	Record Control	Invisible	☐	Visible	☐
092A	Disturb Recorder	Invisible	☐	Visible	☐
092B	Measure't Setup	Invisible	☐	Visible	☐
092C	Comms Settings	Invisible	☐	Visible	☐
092D	Commission Tests	Invisible	☐	Visible	☐
092E	Setting Values	Primary	☐	Secondary	☐
092F	Control Inputs	Invisible	☐	Visible	☐
0930	CLIO Inputs	Disabled	☐	Enabled	☐
0931	CLIO Outputs	Disabled	☐	Enabled	☐
0932	CLIO Labels	Invisible	☐	Visible	☐
0935	Ctrl I/P Config	Invisible	☐	Visible	☐
0936	Ctrl I/P Labels	Invisible	☐	Visible	☐
0939	Direct Access	Invisible	☐	Visible	☐
0950	Function Key(242/3only)	Invisible	☐	Visible	☐
09FF	LCD Contrast				

0A00 CT AND VT RATIOS

0A01	Main VT Primary	
0A02	Main VT Sec'y	
0A07	Phase CT Primary	
0A08	Phase CT Sec'y	
0A0B	SEF CT Primary	
0A0C	SEF CT Sec'y	
0A11	VT Connecting Mode	
0A12	NVD VT Primary	
0A13	NVD VT Sec'y	

CM

0B00 RECORD CONTROL

0B04	Alarm Event	Disabled	☐	Enabled	☐
0B05	Output Event	Disabled	☐	Enabled	☐
0B06	Opto Input Event	Disabled	☐	Enabled	☐
0B07	Relay Sys Event	Disabled	☐	Enabled	☐
0B08	Fault Rec Event	Disabled	☐	Enabled	☐
0B09	Maint Rec Event	Disabled	☐	Enabled	☐
0B0A	Protection Event	Disabled	☐	Enabled	☐
0B40	DDB 31 - 0				
0B41	DDB 63 - 32				
0B42	DDB 95 - 64				
0B43	DDB 127 - 96				
0B44	DDB 159 - 128				
0B45	DDB 191 - 160				
0B46	DDB 223 - 192				

0B00	RECORD CONTROL	
0B47	DDB 255 - 224	
0B48	DDB 287 - 256	
0B49	DDB 319 - 288	
0B4A	DDB 351 - 320	
0B4B	DDB 383 - 352	
0B4C	DDB 415 - 384	
0B4D	DDB 447 - 416	
0B4E	DDB 479 - 448	
0B4F	DDB 511 - 480	
0B50	DDB 543 - 512	
0B51	DDB 575 - 544	
0B52	DDB 607 - 576	
0B53	DDB 639 - 608	
0B54	DDB 671 - 640	
0B55	DDB 703 - 672	
0B56	DDB 735 - 704	
0B57	DDB 767 - 736	
0B58	DDB 799 - 768	
0B59	DDB 831 - 800	
0B5A	DDB 863 - 832	
0B5B	DDB 895 - 864	
0B5C	DDB 927 - 896	
0B5D	DDB 959 - 928	
0B5E	DDB 991 - 960	
0B5F	DDB 1022 - 992	
0B60	DDB 1055 - 1024	
0B61	DDB 1087 - 1056	
0B62	DDB 1119 - 1088	
0B63	DDB 1151 - 1120	
0B64	DDB 1183 - 1152	
0B65	DDB 1215 - 1184	
0B66	DDB 1247 - 1216	
0B67	DDB 1279 - 1248	
0B68	DDB 1311 - 1280	
0B69	DDB 1343 - 1312	

0B00	RECORD CONTROL	
0B6A	DDB 1375 - 1344	
0B6B	DDB 1407 - 1376	
0B6C	DDB 1439 - 1408	
0B6D	DDB 1471 - 1440	
0B6E	DDB 1503 - 1472	
0B6F	DDB 1535 - 1504	
0B70	DDB 1567 - 1536	
0B71	DDB 1599 - 1568	
0B72	DDB 1631 - 1600	
0B73	DDB 1663 - 1632	
0B74	DDB 1695 - 1664	
0B75	DDB 1727 - 1696	
0B76	DDB 1759 - 1728	
0B77	DDB 1791 - 1760	
0B78	DDB 1823 - 1792	
0B79	DDB 1855 - 1824	
0B7A	DDB 1887 - 1856	
0B7B	DDB 1919 - 1888	
0B7C	DDB 1951 - 1920	
0B7D	DDB 1983 - 1952	
0B7E	DDB 2015 - 1984	
0B7F	DDB 2047 - 2016	

CM

0C00	DISTURB. RECORDER	
0C01	Duration	
0C02	Trigger Position	
0C03	Trigger Mode	Single ☐ Extended ☐
0C04	Analog Channel 1	
0C05	Analog Channel 2	
0C06	Analog Channel 3	
0C07	Analog Channel 4	
0C08	Analog Channel 5	
0C09	Analog Channel 6	
0C0A	Analog Channel 7	
0C0B	Analog Channel 8	
0C0C	Digital Input 1	

0C00	DISTURB. RECORDER	
0C0D	Input 1 Trigger	No Trigger ☐ Trigger Edge -/+ ☐ Trigger Edge +/- ☐
0C0E	Digital Input 2	
0C0F	Input 2 Trigger	No Trigger ☐ Trigger Edge -/+ ☐ Trigger Edge +/- ☐
0C10	Digital Input 3	
0C11	Input 3 Trigger	No Trigger ☐ Trigger Edge -/+ ☐ Trigger Edge +/- ☐
0C12	Digital Input 4	
0C13	Input 4 Trigger	No Trigger ☐ Trigger Edge -/+ ☐ Trigger Edge +/-
0C14	Digital Input 5	
0C15	Input 5 Trigger	No Trigger ☐ Trigger Edge -/+ ☐ Trigger Edge +/- ☐
0C16	Digital Input 6	
0C17	Input 6 Trigger	No Trigger ☐ Trigger Edge -/+ ☐ Trigger Edge +/- ☐
0C18	Digital Input 7	
0C19	Input 7 Trigger	No Trigger ☐ Trigger Edge -/+ ☐ Trigger Edge +/- ☐
0C1A	Digital Input 8	
0C1B	Input 8 Trigger	No Trigger ☐ Trigger Edge -/+ ☐ Trigger Edge +/- ☐
0C1C	Digital Input 9	
0C1D	Input 9 Trigger	No Trigger ☐ Trigger Edge -/+ ☐ Trigger Edge +/- ☐
0C1E	Digital Input 10	
0C1F	Input 10 Trigger	No Trigger ☐ Trigger Edge -/+ ☐ Trigger Edge +/- ☐
0C20	Digital Input 11	
0C21	Input 11 Trigger	No Trigger ☐ Trigger Edge -/+ ☐ Trigger Edge +/- ☐
0C22	Digital Input 12	
0C23	Input 12 Trigger	No Trigger ☐ Trigger Edge -/+ ☐ Trigger Edge +/- ☐
0C24	Digital Input 13	
0C25	Input 13 Trigger	No Trigger ☐ Trigger Edge -/+ ☐ Trigger Edge +/- ☐
0C26	Digital Input 14	
0C27	Input 14 Trigger	No Trigger ☐ Trigger Edge -/+ ☐ Trigger Edge +/- ☐
0C28	Digital Input 15	
0C29	Input 15 Trigger	No Trigger ☐ Trigger Edge -/+ ☐ Trigger Edge +/- ☐

0C00	DISTURB. RECORDER	
0C2A	Digital Input 16	
0C2B	Input 16 Trigger	No Trigger ☐ Trigger Edge -/+ ☐ Trigger Edge +/- ☐
0C2C	Digital Input 17	
0C2D	Input 17 Trigger	No Trigger ☐ Trigger Edge -/+ ☐ Trigger Edge +/- ☐
0C2E	Digital Input 18	
0C2F	Input 18 Trigger	No Trigger ☐ Trigger Edge -/+ ☐ Trigger Edge +/- ☐
0C30	Digital Input 19	
0C31	Input 19 Trigger	No Trigger ☐ Trigger Edge -/+ ☐ Trigger Edge +/- ☐
0C32	Digital Input 20	
0C33	Input 20 Trigger	No Trigger ☐ Trigger Edge -/+ ☐ Trigger Edge +/- ☐
0C34	Digital Input 21	
0C35	Input 21 Trigger	No Trigger ☐ Trigger Edge -/+ ☐ Trigger Edge +/- ☐
0C36	Digital Input 22	
0C37	Input 22 Trigger	No Trigger ☐ Trigger Edge -/+ ☐ Trigger Edge +/- ☐
0C38	Digital Input 23	
0C39	Input 23 Trigger	No Trigger ☐ Trigger Edge -/+ ☐ Trigger Edge +/- ☐
0C3A	Digital Input 24	
0C3B	Input 24 Trigger	No Trigger ☐ Trigger Edge -/+ ☐ Trigger Edge +/- ☐
0C3C	Digital Input 25	
0C3D	Input 25 Trigger	No Trigger ☐ Trigger Edge -/+ ☐ Trigger Edge +/- ☐
0C3E	Digital Input 26	
0C3F	Input 26 Trigger	No Trigger ☐ Trigger Edge -/+ ☐ Trigger Edge +/- ☐
0C40	Digital Input 27	
0C41	Input 27 Trigger	No Trigger ☐ Trigger Edge -/+ ☐ Trigger Edge +/- ☐
0C42	Digital Input 28	
0C43	Input 28 Trigger	No Trigger ☐ Trigger Edge -/+ ☐ Trigger Edge +/- ☐
0C44	Digital Input 29	
0C45	Input 29 Trigger	No Trigger ☐ Trigger Edge -/+ ☐ Trigger Edge +/- ☐
0C46	Digital Input 30	

0C00 DISTURB. RECORDER

0C47	Input 30 Trigger	No Trigger ☐ Trigger Edge +/- ☐	Trigger Edge -/+ ☐
0C48	Digital Input 31		
0C49	Input 31 Trigger	No Trigger ☐ Trigger Edge +/- ☐	Trigger Edge -/+ ☐
0C4A	Digital Input 32		
0C4B	Input 32 Trigger	No Trigger ☐ Trigger Edge +/- ☐	Trigger Edge -/+ ☐

0D00 MEASURE'T. SETUP

0D01	Default Display	3Ph + N Current 3Ph Voltage Power Date & Time Description Plant Reference Frequency Thermal State					
0D02	Local Values	Primary	☐	Secondary	☐		
0D03	Remote Values	Primary	☐	Secondary	☐		
0D04	Measurement Ref	VA ☐ IA ☐	VB ☐ IB ☐	VC ☐ IC ☐			
0D06	Fix Dem Period						
0D07	Alarm Fix Dem						
0D08	3Ph W Thresh						
0D09	3Ph VAr Thresh						
0D0A	Alarm Energies						
0D0B	W Fwd Thresh						
0D0C	W Rev Thresh						
0D0D	VAr Fwd Thresh						
0D0E	VAr Rev Thresh						
0D0F	Motor Hour Run >1	Disabled	☐	Enabled ☐			
0D10	Motor Hour Run >1						
0D11	Motor Hour Run >2	Disabled	☐	Enabled ☐			
0D12	Motor Hour Run >2						
0D1B	Remote 2 Values	Primary	☐	Secondary	☐		

CM

0E00	COMMUNICATIONS	
0E01	RP1 Protocol	Courier ☐ IEC 870-5-103 ☐ MODBUS ☐ DNP3.0 ☐ IEC 61850 ☐
0E02	RP1 Address	
0E03	RP1 Inactivity Timer	
0E04	RP1 Baud Rate	1200 ☐ 2400 ☐ 4800 ☐ 9600 ☐ 19200 ☐ 38400 ☐
0E05	RP1 Parity	Odd ☐ Even ☐ None ☐
0E06	RP1 Measure't Period	
0E07	RP1 Physical Link	Copper ☐ Fiber Optic ☐
0E08	RP1 Time Sync	Disabled ☐ Enabled ☐
0E09	MODBUS IEC Time	Standard IEC ☐ Reverse ☐
0E0A	RP1 CS103 Blocking	Disabled ☐ Monitor Blocking ☐ Command Blocking ☐
0E0B	RP1 Card Status	K Bus OK ☐ EIA(RS)485 OK ☐ Fiber Optic OK ☐
0E0C	RP1 Port Config	EIA(RS)232 ☐ EIA(RS)485 ☐ K-Bus ☐
0E1F	NIC Protocol	IEC 61850 ☐ ☐
0E22	NIC MAC Address	IEC 61850 ☐ ☐
0E64	NIC Tunl Timeout	IEC 61850 ☐ ☐
0E6A	NIC Link Report	IEC 61850 ☐ ☐
0E8D	RP1 Comms. Mode	IEC 60870 FT1.2 ☐ 10-bit No Parity ☐
0E81	RP2 Protocol	Courier ☐
0E0B	RP2 Card Status	Unsupported ☐ Card Not Fitted ☐ EIA(RS)232 OK ☐ EIA(RS)485 OK ☐ K-Bus OK ☐
0E88	RP2 Port Config	EIA(RS)232 ☐ EIA(RS)485 ☐ K-Bus OK ☐
0E8A	RP2 Comms Mode	IEC 60870 FT1.2 ☐ 10-bit No Parity ☐
0E90	RP2 Address	
0E92	RP2 Inactive Timer	
0E94	RP2 Baud Rate	1200 ☐ 2400 ☐ 4800 ☐ 9600 ☐ 19200 ☐ 38400 ☐

0F00	COMMISSION TESTS	
0F05	Monitor Bit 1	
0F06	Monitor Bit 2	
0F07	Monitor Bit 3	
0F08	Monitor Bit 4	
0F09	Monitor Bit 5	
0F0A	Monitor Bit 6	
0F0B	Monitor Bit 7	
0F0C	Monitor Bit 8	

0F0D	Test Mode	Test Mode ☐	Contacts Blocked ☐
0F0E	Test Pattern		

1000 CB MONITOR SETUP

1001	Broken I^		
1002	I^ Maintenance	Alarm Disabled ☐	Alarm Enabled ☐
1003	I^ Maintenance		
1006	Nb CB Ops Maint	Alarm Disabled ☐	Alarm Enabled ☐
1007	Nb CB Ops Maint		
100A	CB Time Maint	Alarm Disabled ☐	Alarm Enabled ☐
100B	CB Time Maint		

1100 OPTO CONFIG

1101	Global Nominal V	24 - 27 V ☐ 48 - 54 V ☐ 220 - 250 V ☐ Custom	30 - 34 V ☐ 110 - 125 V ☐
1102	Opto Input 1	24 - 27 V ☐ 48 - 54 V ☐ 220 - 250 V ☐	30 - 34 V ☐ 110 - 125 V ☐
1103	Opto Input 2	24 - 27 V ☐ 48 - 54 V ☐ 220 - 250 V ☐	30 - 34 V ☐ 110 - 125 V ☐
1104	Opto Input 3	24 - 27 V ☐ 48 - 54 V ☐ 220 - 250 V ☐	30 - 34 V ☐ 110 - 125 V ☐
1105	Opto Input 4	24 - 27 V ☐ 48 - 54 V ☐ 220 - 250 V ☐	30 - 34 V ☐ 110 - 125 V ☐
1106	Opto Input 5	24 - 27 V ☐ 48 - 54 V ☐ 220 - 250 V ☐	30 - 34 V ☐ 110 - 125 V ☐
1107	Opto Input 6	24 - 27V ☐ 48 - 54 V ☐ 220 - 250 V ☐	30 - 34 V ☐ 110 - 125 V ☐
1108	Opto Input 7	24 - 27 V ☐ 48 - 54 V ☐ 220 - 250 V ☐	30 - 34 V ☐ 110 - 125 V ☐
1109	Opto Input 8	24 - 27 V ☐ 48 - 54 V ☐ 220 - 250 V ☐	30 - 34 V ☐ 110 - 125 V ☐
110A	Opto Input 9	24 - 27 V ☐ 48 - 54 V ☐ 220 - 250 V ☐	30 - 34 V ☐ 110 - 125 V ☐
110B	Opto Input 10	24 - 27 V ☐ 48 - 54 V ☐ 220 - 250 V ☐	30 - 34 V ☐ 110 - 125 V ☐

1100 OPTO CONFIG

110C	Opto Input 11	24 - 27 V ☐ 48 - 54 V ☐ 220 - 250 V ☐		30 - 34 V ☐ 110 - 125 V ☐	
110D	Opto Input 12	24 - 27 V ☐ 48 – 54 V ☐ 220 - 250 V ☐		30 - 34 V ☐ 110 - 125 V ☐	
110E	Opto Input 13	24 - 27 V ☐ 48 - 54 V ☐ 220 - 250 V ☐		30 - 34 V ☐ 110 - 125 V ☐	
110F	Opto Input 14	24 - 27 V ☐ 48 - 54 V ☐ 220 - 250 V ☐		30 - 34 V ☐ 110 - 125 V ☐	
1110	Opto Input 15	24 - 27 V ☐ 48 - 54 V ☐ 220 - 250 V ☐		30 - 34 V ☐ 110 - 125 V ☐	
1111	Opto Input 16	24 - 27 V ☐ 48 - 54 V ☐ 220 - 250 V ☐		30 - 34 V ☐ 110 - 125 V ☐	
1150	Opto Filter Ctrl				
1180	Characteristic	Standard 60% - 80% ☐		50% - 70% ☐	

1300 CTRL I/P CONFIG

1301	Hotkey Enabled				
1310	Control Input 1	Latched ☐		Pulsed ☐	
1311	Ctrl Command 1	On/Off ☐ In/Out ☐		Set/Reset ☐ Enabled/Disabled ☐	
1314	Control Input 2	Latched ☐		Pulsed ☐	
1315	Ctrl Command 2	On/Off ☐ In/Out ☐		Set/Reset ☐ Enabled/Disabled ☐	
1318	Control Input 3	Latched ☐		Pulsed ☐	
1319	Ctrl Command 3	On/Off ☐ In/Out ☐		Set/Reset ☐ Enabled/Disabled ☐	
131C	Control Input 4	Latched ☐		Pulsed ☐	
131D	Ctrl Command 4	On/Off ☐ In/Out ☐		Set/Reset ☐ Enabled/Disabled ☐	
1320	Control Input 5	Latched ☐		Pulsed ☐	
1321	Ctrl Command 5	On/Off ☐ In/Out ☐		Set/Reset ☐ Enabled/Disabled ☐	
1324	Control Input 6	Latched ☐		Pulsed ☐	
1325	Ctrl Command 6	On/Off ☐ In/Out ☐		Set/Reset ☐ Enabled/Disabled ☐	
1328	Control Input 7	Latched ☐		Pulsed ☐	
1329	Ctrl Command 7	On/Off ☐ In/Out ☐		Set/Reset ☐ Enabled/Disabled ☐	
132C	Control Input 8	Latched ☐		Pulsed ☐	

CM

1300	CTRL I/P CONFIG				
132D	Ctrl Command 8	On/Off ☐ In/Out ☐		Set/Reset ☐ Enabled/Disabled ☐	
1330	Control Input 9	Latched ☐		Pulsed ☐	
1331	Ctrl Command 9	On/Off ☐ In/Out ☐		Set/Reset ☐ Enabled/Disabled ☐	
1334	Control Input 10	Latched ☐		Pulsed ☐	
1335	Ctrl Command 10	On/Off ☐ In/Out ☐		Set/Reset ☐ Enabled/Disabled ☐	
1338	Control Input 11	Latched ☐		Pulsed ☐	
1339	Ctrl Command 11	On/Off ☐ In/Out ☐		Set/Reset ☐ Enabled/Disabled ☐	
133C	Control Input 12	Latched ☐		Pulsed ☐	
133C	Ctrl Command 12	On/Off ☐ In/Out ☐		Set/Reset ☐ Enabled/Disabled ☐	
1340	Control Input 13	Latched ☐		Pulsed ☐	
1341	Ctrl Command 13	On/Off ☐ In/Out ☐		Set/Reset ☐ Enabled/Disabled ☐	
1344	Control Input 14	Latched ☐		Pulsed ☐	
1345	Ctrl Command 14	On/Off ☐ In/Out ☐		Set/Reset ☐ Enabled/Disabled ☐	
1348	Control Input 15	Latched ☐		Pulsed ☐	
1349	Ctrl Command 15	On/Off ☐ In/Out ☐		Set/Reset ☐ Enabled/Disabled ☐	
134C	Control Input 16	Latched ☐		Pulsed ☐	
134D	Ctrl Command 16	On/Off ☐ In/Out ☐		Set/Reset ☐ Enabled/Disabled ☐	
1350	Control Input 17	Latched ☐		Pulsed ☐	
1351	Ctrl Command 17	On/Off ☐ In/Out ☐		Set/Reset ☐ Enabled/Disabled ☐	
1354	Control Input 18	Latched ☐		Pulsed ☐	
1355	Ctrl Command 18	On/Off ☐ In/Out ☐		Set/Reset ☐ Enabled/Disabled ☐	
1358	Control Input 19	Latched ☐		Pulsed ☐	
1359	Ctrl Command 19	On/Off ☐ In/Out ☐		Set/Reset ☐ Enabled/Disabled ☐	
135C	Control Input 20	Latched ☐		Pulsed ☐	
135D	Ctrl Command 20	On/Off ☐ In/Out ☐		Set/Reset ☐ Enabled/Disabled ☐	
1360	Control Input 21	Latched ☐		Pulsed ☐	
1361	Ctrl Command 21	On/Off ☐ In/Out ☐		Set/Reset ☐ Enabled/Disabled ☐	
1364	Control Input 22	Latched ☐		Pulsed ☐	
1365	Ctrl Command 22	On/Off ☐ In/Out ☐		Set/Reset ☐ Enabled/Disabled ☐	
1368	Control Input 23	Latched ☐		Pulsed ☐	
1369	Ctrl Command 23	On/Off ☐ In/Out ☐		Set/Reset ☐ Enabled/Disabled ☐	
136C	Control Input 24	Latched ☐		Pulsed ☐	
136D	Ctrl Command 24	On/Off ☐ In/Out ☐		Set/Reset ☐ Enabled/Disabled ☐	
1370	Control Input 25	Latched ☐		Pulsed ☐	

1300	CTRL I/P CONFIG				
1371	Ctrl Command 25	On/Off ☐ In/Out ☐		Set/Reset ☐ Enabled/Disabled ☐	
1374	Control Input 26	Latched ☐		Pulsed ☐	
1375	Ctrl Command 26	On/Off ☐ In/Out ☐		Set/Reset ☐ Enabled/Disabled ☐	
1378	Control Input 27	Latched ☐		Pulsed ☐	
1379	Ctrl Command 27	On/Off ☐ In/Out ☐		Set/Reset ☐ Enabled/Disabled ☐	
137C	Control Input 28	Latched ☐		Pulsed ☐	
137D	Ctrl Command 28	On/Off ☐ In/Out ☐		Set/Reset ☐ Enabled/Disabled ☐	
1380	Control Input 29	Latched ☐		Pulsed ☐	
1381	Ctrl Command 29	On/Off ☐ In/Out ☐		Set/Reset ☐ Enabled/Disabled ☐	
1384	Control Input 30	Latched ☐		Pulsed ☐	
1385	Ctrl Command 30	On/Off ☐ In/Out ☐		Set/Reset ☐ Enabled/Disabled ☐	
1388	Control Input 31	Latched ☐		Pulsed ☐	
1389	Ctrl Command 31	On/Off ☐ In/Out ☐		Set/Reset ☐ Enabled/Disabled ☐	
138C	Control Input 32	Latched ☐		Pulsed ☐	
138D	Ctrl Command 32	On/Off ☐ In/Out ☐		Set/Reset ☐ Enabled/Disabled ☐	

1700	FUNCTION KEYS (P242/3 only)				
1702	Fn. Key 1 Status	Unlock* ☐		Enable* ☐	
1703	Fn. Key 1 Mode	Normal * ☐		Toggle* ☐	
1704	Fn. Key 1 Label				
1705	Fn. Key 2 Status	Unlock* ☐		Enable* ☐	
1706	Fn. Key 2 Mode	Normal* ☐		Toggle* ☐	
1707	Fn. Key 2 Label				
1708	Fn. Key 3 Status	Unlock* ☐		Enable* ☐	
1709	Fn. Key 3 Mode	Normal* ☐		Toggle* ☐	
170A	Fn. Key 3 Label				
170B	Fn. Key 4 Status	Unlock* ☐		Enable* ☐	
170C	Fn. Key 4 Mode	Normal* ☐		Toggle* ☐	
170D	Fn. Key 4 Label				
170E	Fn. Key 5 Status	Unlock* ☐		Enable* ☐	
170F	Fn. Key 5 Mode	Normal* ☐		Toggle* ☐	
1710	Fn. Key 5 Label				
1711	Fn. Key 6 Status	Unlock* ☐		Enable* ☐	
1712	Fn. Key 6 Mode	Normal* ☐		Toggle* ☐	
1713	Fn. Key 6 Label				
1714	Fn. Key 7 Status	Unlock* ☐		Enable* ☐	
1715	Fn. Key 7 Mode	Normal* ☐		Toggle* ☐	
1716	Fn. Key 7 Label				

CM

1700	FUNCTION KEYS (P242/3 only)				
1717	Fn. Key 8 Status	Unlock*	☐	Enable*	☐
1718	Fn. Key 8 Mode	Normal*	☐	Toggle*	☐
1719	Fn. Key 8 Label				
171A	Fn. Key 9 Status	Unlock*	☐	Enable*	☐
171B	Fn. Key 9 Mode	Normal*	☐	Toggle*	☐
171C	Fn. Key 9 Label				
171D	Fn. Key 10 Status	Unlock*	☐	Enable*	☐
171E	Fn. Key 10 Mode	Normal*	☐	Toggle*	☐
171F	Fn. Key 10 Label				

2900	CTRL I/P LABELS	
2901	Control Input 1	
2902	Control Input 2	
2903	Control Input 3	
2904	Control Input 4	
2905	Control Input 5	
2906	Control Input 6	
2907	Control Input 7	
2908	Control Input 8	
2909	Control Input 9	
290A	Control Input 10	
290B	Control Input 11	
290C	Control Input 12	
290D	Control Input 13	
290E	Control Input 14	
290F	Control Input 15	
2910	Control Input 16	
2911	Control Input 17	
2912	Control Input 18	
2913	Control Input 19	
2914	Control Input 20	
2915	Control Input 21	
2916	Control Input 22	
2917	Control Input 23	
2918	Control Input 24	
2919	Control Input 25	
291A	Control Input 26	

2900	CTRL I/P LABELS	
291B	Control Input 27	
291C	Control Input 28	
291D	Control Input 29	
291E	Control Input 30	
291F	Control Input 31	
2920	Control Input 32	

B700	PSL DATA	
B701	Grp 1 PSL Ref	
B702	Date/Time	
B703	Grp 1 PSL ID	
B711	Grp 2 PSL Ref	
B712	Date/Time	
B713	Grp 2 PSL ID	
B721	Grp 3 PSL Ref	
B722	Date/Time	
B723	Grp 3 PSL ID	
B731	Grp 4 PSL Ref	
B732	Date/Time	
B733	Grp 4 PSL ID	

PROTECTION SETTINGS

Group 1 protection settings use 3xxx/4xxx Courier cell addresses

Group 2 protection settings use 5xxx/6xxx Courier cell addresses

CM

3000	THERMAL OVERLOAD		
Group 1 settings		Group 1 settings	Group 2 settings
3001	I_{th} Current Set		
3002	K Coefficient		
3003	Thermal Const T1		
3004	Thermal Const T2		
3005	Cooling Const Tr		
3006	Thermal Trip		
3007	Thermal Alarm		
3008	Alarm Threshold		
3009	Thermal Lockout		

3000 THERMAL OVERLOAD

300A	Lockout Thresh		
300B	Inh Trip Dur St		

3100 SHORT CIRCUIT

Group 1 settings		Group 1 settings	Group 2 settings
3101	I>1 Function		
3102	I>1 Current Set		
3103	I>1 Time Delay		
3111	I>2 Function		
3112	I>2 Current Set		
3113	I>2 Time Delay		
3121	I>3 Function		
3122	I>3 Current setting		
3123	I>3 Time Delay		
3131	I>4 Function		
3132	I>4 Current setting		
3133	I>4 Time Delay		

3200 SENSITIVE E/F

Group 1 settings		Group 1 settings	Group 2 settings
3201	ISEF>1 Function		
3202	ISEF>1 Direction		
3203	ISEF>1 Current		
3204	ISEF>1 T Delay		
3205	ISEF>1 TMS		
3206	ISEF>1 Time Dial		
3207	ISEF>1 Reset Chr		
3208	ISEF>1 tReset		
3209	ISEF>2 Function		
320A	ISEF>2 Direction		
320B	ISEF>2 Current		
320C	ISEF>2 T Delay		
320D	ISEF> Directional		
320E	ISEF> Char Angle		
320F	ISEF> VNpol set		
3210	Wattmetric SEF		
3211	PO> Function		

3200 SENSITIVE E/F

Group 1 settings		Group 1 settings	Group 2 settings
3212	PO> Current Set		
3213	PO> Voltage Set		
3214	PO> Coeff K Set		
3215	PO> Char Angle		
3216	PO> Time Delay		
3220	ISEF> VTS Blocking		

3300 NEG SEQ O/C

Group 1 settings		Group 1 settings	Group 2 settings
3301	I2>1 Status		
3302	I2>1 Current Set		
3303	I2>1 Time Delay		
3304	I2>2 Status		
3305	I2>2 Current Set		
3306	I2>2 TMS		

3400 3PH VOLT CHECK

Group 1 settings		Group 1 settings	Group 2 settings
3401	Start Low V Set		

3500 DERIVED EARTH FAULT

Group 1 settings		Group 1 settings	Group 2 settings
3501	IN>1 Function		
3502	IN>1 Direction		
3503	IN>1 Current		
3504	IN>1 T Delay		
3505	IN>1 TMS		
3506	IN1 Time Dial		
3507	IN>1 Reset Chr		
3508	IN>1 tReset		
3509	IN>2 Function		
350A	IN>2 Direction		
350B	IN>2 Current		
350C	IN>2 T Delay		
350D	IN> Directional		
350E	IN> Char Angle		
350F	IN> Pol Type		

3500 DERIVED EARTH FAULT

Group 1 settings		Group 1 settings	Group 2 settings
3510	IN> VN pol set		
3511	IN2> V2pol set		
3512	IN2> I2pol set		
3520	IN> VTS Blocking		

3900 STALL PROTECTION

Group 1 settings		Group 1 settings	Group 2 settings
3901	Prolonged Start		
3902	Start Criteria		
3903	Starting Current		
3904	Prol Start Time		
3905	Stall Rotor-strt		
3906	Stall Detection		
3907	Stall Setting		
3908	Stall Time		
3909	Reacceleration		
390A	Reacc Low V Set		

3A00 DIFFERENTIAL

Group 1 settings		Group 1 settings	Group 2 settings
3A01	Diff Function		
3A02	Diff Is1		
3A03	Diff k1		
3A04	Diff Is2		
3A05	Diff k2		

3B00 RESIDUAL O/V NVD

Group 1 settings		Group 1 settings	Group 2 settings
3B02	VN>1 Function		
3B03	VN>1 Voltage Set		
3B04	VN>1 Time Delay		
3B05	VN>1 TMS		
3B07	VN>2 Status		
3B08	VN>2 Voltage Set		
3B09	VN>2 Time Delay		

3C00 LIMIT NB STARTS

Group 1 settings		Group 1 settings	Group 2 settings
3C01	Hot Start Status		
3C02	Hot Start Nb		
3C03	Cold Start Stat		
3C04	Cold Start Nb		
3C05	Supervising Time		
3C06	T Betw St Status		
3C07	Time Betw Start		
3C08	Inhib Start Time		

3D00 LOSS OF LOAD

Group 1 settings		Group 1 settings	Group 2 settings
3D01	P<1 Status		
3D02	P<1 Power Set		
3D03	P<1 Time Delay		
3D11	P<2 Status		
3D12	P<2 Power Set		
3D13	P<2 Time Delay		
3D20	P< Drop-off Time		

3E00 OUT OF STEP

Group 1 settings		Group 1 settings	Group 2 settings
3E01	PF< Status Lead		
3E02	PF< Trip Set Lead		
3E03	PF< Trip Delay Lead		
3E11	PF< Status Lag		
3E12	PF< Trip Set Lag		
3E13	PF< Trip Delay Lag		
3E01	PF< Status Lead		

3F00 REVERSE POWER

Group 1 settings		Group 1 settings	Group 2 settings
3F02	Rev P< Power Set		
3F03	Rev P< Time Delay		
3F20	P< Drop-of Ti		

4000 ANTI-BACKSPIN

Group 1 settings		Group 1 settings	Group 2 settings
4001	VRem Anti-backs		
4002	Anti-backs Delay		

4100 FIELD FAILURE

Group 1 settings		Group 1 settings	Group 2 settings
4101	FFail Alm Status		
4102	FFail Alm Angle		
4103	FFail Alm Delay		
4104	FFail1 Status		
4105	FFail1 -Xa1		
4106	FFail1 Xb1		
4107	FFail1 Time Delay		
4108	FFail1 DO Timer		
4109	FFail2 Status		
410A	FFail2 -Xa1		
410B	FFail2 Xb1		
410C	FFail2 Time Delay		
410D	FFail2 DO Timer		

4200 VOLT PROTECTION

Group 1 settings		Group 1 settings	Group 2 settings
4201	UNDERVOLTAGE		
4204	V<1 Function		
4205	V<1 Voltage Set		
4206	V<1 Time Delay		
4207	V<1 TMS		
4209	V<2 Status		
420A	V<2 Voltage Set		
420B	V<2 Time Delay		
420C	Inhib During St		
420D	OVERVOLTAGE		
4210	V>1 Status		
4211	V>1 Voltage Set		
4212	V>1 Time Delay		
4214	V>2 Status		
4215	V>2 Voltage Set		

4200 VOLT PROTECTION

Group 1 settings		Group 1 settings	Group 2 settings
4216	V>2 Time Delay		

4300 UNDERFREQUENCY

Group 1 settings		Group 1 settings	Group 2 settings
4302	F<1 Status		
4303	F<1 Setting		
4304	F<1 Time Delay		
4305	F<2 Status		
4306	F<2 Setting		
4307	F<2 Time Delay		

4400 RTD PROTECTION

Group 1 settings		Group 1 settings	Group 2 settings
4401	Select RTD		
4403	RTD 1 Alarm Set		
4404	RTD 1 Alarm Dly		
4405	RTD 1 Trip Set		
4406	RTD 1 Trip Dly		
4408	RTD 2 Alarm Set		
4409	RTD 2 Alarm Dly		
440A	RTD 2 Trip Set		
440B	RTD 2 Trip Dly		
440D	RTD 3 Alarm Set		
440E	RTD 3 Alarm Dly		
440F	RTD 3 Trip Set		
4410	RTD 3 Trip Dly		
4412	RTD 4 Alarm Set		
4413	RTD 4 Alarm Dly		
4414	RTD 4 Trip Set		
4415	RTD 4 Trip Dly		
4417	RTD 5 Alarm Set		
4418	RTD 5 Alarm Dly		
4419	RTD 5 Trip Set		
441A	RTD 5 Trip Dly		
441C	RTD 6 Alarm Set		
441D	RTD 6 Alarm Dly		

4400 RTD PROTECTION

Group 1 settings		Group 1 settings	Group 2 settings
441E	RTD 6 Trip Set		
441F	RTD 6 Trip Dly		
4421	RTD 7 Alarm Set		
4422	RTD 7 Alarm Dly		
4423	RTD 7 Trip Set		
4424	RTD 7 Trip Dly		
4426	RTD 8 Alarm Set		
4427	RTD 8 Alarm Dly		
4428	RTD 8 Trip Set		
4429	RTD 8 Trip Dly		
442B	RTD 9 Alarm Set		
442C	RTD 9 Alarm Dly		
442D	RTD 9 Trip Set		
442E	RTD 9 Trip Dly		
4430	RTD 10 Alarm Set		
4431	RTD 10 Alarm Dly		
4432	RTD 10 Trip Set		
4433	RTD 10 Trip Dly		
4434	Ext Temp Influen		
4435	Ext Temp RTD		
4436	Ext RTD Back-up		
4450	Type RTD		
4451	RTD Unit		

4500 CB FAIL

Group 1 settings		Group 1 settings	Group 2 settings
4501	BREAKER FAIL		
4502	CB Fail 1 Status		
4503	CB Fail 1 Timer		
4504	CB Fail 2 Status		
4505	CB Fail 2 Timer		
4506	CBF Non I Reset		
4507	CBF Ext Reset		
4508	UNDER CURRENT		
4509	I< Current Set		

4600 CLIO INPUT

Group 1 settings		Group 1 settings	Group 2 settings
4701	Range 1		
4702	Unit 1		
4703	Minimum 1		
4704	Maximum 1		
4705	Function 1		
4706	Alarm Set 1		
4707	Alarm Delay 1		
4708	Trip Set 1		
4709	Trip Delay 1		
4711	Range 2		
4712	Unit 2		
4713	Minimum 2		
4714	Maximum 2		
4715	Function 2		
4716	Alarm Set 2		
4617	Alarm Delay 2		
4618	Trip Set 2		
4619	Trip Delay 2		
4621	Range 3		
4622	Unit 3		
4623	Minimum 3		
4624	Maximum 3		
4625	Function 3		
4626	Alarm Set 3		
4627	Alarm Delay 3		
4628	Trip Set 3		
4629	Trip Delay 3		
4631	Range 4		
4632	Unit 4		
4633	Minimum 4		
4634	Maximum 4		
4635	Function 4		
4636	Alarm Set 4		
4637	Alarm Delay 4		

4600 CLIO INPUT

Group 1 settings		Group 1 settings	Group 2 settings
4638	Trip Set 4		
4639	Trip Delay 4		
4640	Drop-Off time		

4700 CLIO OUTPUTS

Group 1 settings		Group 1 settings	Group 2 settings
4701	Range 1		
4702	ANALOG OUTPUT 1		
4703	Minimum 1		
4704	Maximum 1		
4711	Range 2		
4712	ANALOG OUTPUT 2		
4713	Minimum 2		
4714	Maximum 2		
4721	Range 3		
4722	ANALOG OUTPUT 3		
4723	Minimum 3		
4724	Maximum 3		
4731	Range 4		
4732	ANALOG OUTPUT 4		
4733	Minimum 4		
4734	Maximum 4		

4800 SUPERVISION

Group 1 settings		Group 1 settings	Group 2 settings
4802	VTS Time Delay		
4803	VTS I2 & I0 > Inhibit		
4804	Detect 3P		
4805	Threshold 3P		
4806	Delta I>		
4807	VTS I> Inhibit		
4810	CT Supervision		
4811	CTS1 Status		
4812	CTS1 VN< Inhibit		
4813	CTS1 IN> Set		
4814	CTS1 Time Delay		

4800 SUPERVISION

Group 1 settings		Group 1 settings	Group 2 settings
4821	CTS2 Status		
4822	CTS2 VN< Inhibit		
4823	CTS2 IN> Set		
4824	CTS2 Time Delay		

4900 SYSTEM CONFIG

Group 1 settings		Group 1 settings	Group 2 settings
4901	Phase Sequence		

4A00 INPUT LABELS

Group 1 settings		Group 1 settings	Group 2 settings
4A01	Opto Input 1		
4A02	Opto Input 2		
4A03	Opto Input 3		
4A04	Opto Input 4		
4A05	Opto Input 5		
4A06	Opto Input 6		
4A07	Opto Input 7		
4A08	Opto Input 8		
4A09	Opto Input 9		
4A0A	Opto Input 10		
4A0B	Opto Input 11		
4A0C	Opto Input 12		
4A0D	Opto Input 13		
4A0E	Opto Input 14		
4A0F	Opto Input 15		
4A10	Opto Input 16		

4B00 OUTPUT LABELS

Group 1 settings		Group 1 settings	Group 2 settings
4B01	Relay 1		
4B02	Relay 2		
4B03	Relay 3		
4B04	Relay 4		
4B05	Relay 5		
4B06	Relay 6		

4B00 OUTPUT LABELS

4B07	Relay 7		
4B08	Relay 8		
4B09	Relay 9		
4B0A	Relay 10		
4B0B	Relay 11		
4B0C	Relay 12		
4B0D	Relay 13		
4B0E	Relay 14		
4B0F	Relay 15		
4B10	Relay 16		

4C00 RTD LABELS

Group 1 settings		Group 1 settings	Group 2 settings
4C01	RTD 1		
4C02	RTD 2		
4C03	RTD 3		
4C04	RTD 4		
4C05	RTD 5		
4C06	RTD 6		
4C07	RTD 7		
4C08	RTD 8		
4C09	RTD 9		
4C0A	RTD 10		

4D00 CLIO LABELS

Group 1 settings		Group 1 settings	Group 2 settings
4D01	CLIO Input 1		
4D02	CLIO Input 2		
4D03	CLIO Input 3		
4D04	CLIO Input 4		

CM

MAINTENANCE

MT

Date:	**24th November 2009**
Hardware suffix:	**J (P241) K (P242/P243)**
Software version:	**57**
Connection diagrams:	**10P241xx (xx = 01 to 02)** **10P242xx (xx = 01)** **10P243xx (xx = 01)**

MT

CONTENTS

1	**MAINTENANCE**	**5**
1.1	**Maintenance period**	**5**
1.2	**Maintenance checks**	**5**
1.2.1	Alarms	5
1.2.2	Opto-isolators	5
1.2.3	Output relays	5
1.2.4	Measurement accuracy	6
1.3	**Method of repair**	**6**
1.3.1	Replacing the complete relay	6
1.3.2	Replacing a PCB	7
1.3.2.1	Replacement of the main processor board	10
1.3.2.2	Replacement of the IRIG-B/2nd rear communications, Ethernet board	11
1.3.2.3	Replacement of the input module	13
1.3.2.4	Replacement of the power supply board	14
1.3.2.5	Replacement of the relay board in the power supply module	15
1.3.2.6	Replacement of the opto and separate relay boards (P241/2/3)	15
1.3.2.7	Replacement of the RTD input board	16
1.3.2.8	Replacement of the CLIO input board	18
1.4	**Re-calibration**	**18**
1.5	**Changing the battery**	**18**
1.5.1	Instructions for replacing the battery	18
1.5.2	Post modification tests	19
1.5.3	Battery disposal	19
1.6	**Cleaning**	**19**

MT

FIGURES

Figure 1: Location of securing screws for terminal blocks 7
Figure 2: Front panel assembly 10
Figure 3: Location of securing screws for IRIG-B board 11
Figure 4: Typical IRIG-B board 12
Figure 5: Second rear communications board with IRIG-B 12
Figure 6: Location of securing screws for input module 13
Figure 7: Typical power supply board 14
Figure 8: Typical relay board 15
Figure 9: Typical opto board 16
Figure 10: Location of securing screws for RTD/CLIO input board 17
Figure 11: Typical RTD input board 17

TABLES

Table 1: PCB part numbers 10

1 MAINTENANCE

1.1 Maintenance period

It is recommended that products supplied by Schneider Electric receive periodic monitoring after installation. As with all products some deterioration with time is inevitable. In view of the critical nature of protective relays and their infrequent operation, it is desirable to confirm that they are operating correctly at regular intervals.

Schneider Electric protective relays are designed for life in excess of 20 years.

MiCOM P24x motor relays are self-supervising and so require less maintenance than earlier designs of relay. Most problems will result in an alarm so that remedial action can be taken. However, some periodic tests should be done to ensure that the relay is functioning correctly and the external wiring is intact.

If a Preventative Maintenance Policy exists within the customer's organization then the recommended product checks should be included in the regular program. Maintenance periods will depend on many factors, such as:

- The operating environment
- The accessibility of the site
- The amount of available manpower
- The importance of the installation in the power system
- The consequences of failure

1.2 Maintenance checks

Although some functionality checks can be performed from a remote location by utilizing the communications ability of the relays, these are predominantly restricted to checking that the relay is measuring the applied currents and voltages accurately, and checking the circuit breaker maintenance counters. Therefore it is recommended that maintenance checks are performed locally (i.e. at the substation itself).

Before carrying out any work on the equipment, the user should be familiar with the contents of the Safety and Technical Data chapters and the ratings on the equipment's rating label.

Before carrying out any work on the equipment the user should be familiar with the contents of the Safety Section/Safety Guide SFTY/4LM/G11 or later issue and the ratings on the equipment's rating label.

MT

1.2.1 Alarms

The alarm status LED should first be checked to identify if any alarm conditions exist. If so, press the read key [🕮] repeatedly to step through the alarms. Clear the alarms to extinguish the LED.

1.2.2 Opto-isolators

The opto-isolated inputs can be checked to ensure that the relay responds to their energization by repeating the commissioning test detailed in section 5.2.6 of *P24x/EN CM*.

1.2.3 Output relays

The output relays can be checked to ensure that they operate by repeating the commissioning test detailed in section 5.2.7 of *P24x/EN CM*.

1.2.4 Measurement accuracy

If the power system is energized, the values measured by the relay can be compared with known system values to check that they are in the approximate range that is expected. If they are then the analog/digital conversion and calculations are being performed correctly by the relay. Suitable test methods can be found in sections 7.1 and 7.2 of *P24x/EN CM*.

Alternatively, the values measured by the relay can be checked against known values injected into the relay via the test block, if fitted, or injected directly into the relay terminals. Suitable test methods can be found in sections 5.2.13 and 5.2.14 of *P24x/EN CM*. These tests will prove the calibration accuracy is being maintained.

1.3 Method of repair

If the relay should develop a fault whilst in service, depending on the nature of the fault, the watchdog contacts will change state and an alarm condition will be flagged. Due to the extensive use of surface-mount components faulty PCBs should be replaced as it is not possible to perform repairs on damaged circuits. Therefore either the complete relay or just the faulty PCB, identified by the in-built diagnostic software, can be replaced. Advice about identifying the faulty PCB can be found in 'Problem Analysis'.

The preferred method is to replace the complete relay as it ensures that the internal circuitry is protected against electrostatic discharge and physical damage at all times and overcomes the possibility of incompatibility between replacement PCBs. However, it may be difficult to remove an installed relay due to limited access in the back of the cubicle and rigidity of the scheme wiring.

Replacing PCBs can reduce transport costs but requires clean, dry conditions on site and higher skills from the person performing the repair. However, if the repair is not performed by an approved service center, the warranty will be invalidated.

Before carrying out any work on the equipment the user should be familiar with the contents of the Safety Section/Safety Guide SFTY/4LM/G11 or later issue and the ratings on the equipment's rating label. This should ensure that no damage is caused by incorrect handling of the electronic components.

1.3.1 Replacing the complete relay

The case and rear terminal blocks have been designed to facilitate removal of the complete relay should replacement or repair become necessary without having to disconnect the scheme wiring.

Before working at the rear of the relay, isolate all voltage and current supplies to the relay.

Note: The MiCOM range of relays have integral current transformer shorting switches which will close when the heavy duty terminal block is removed.

Disconnect the relay earth connection from the rear of the relay.

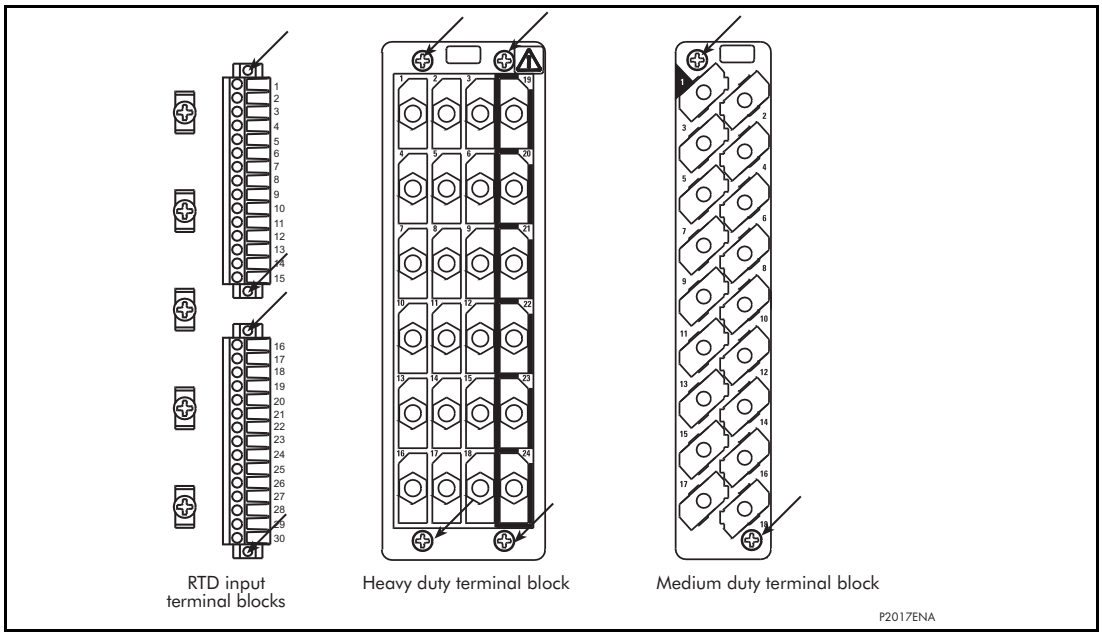

Figure 1: Location of securing screws for terminal blocks

There are three types of terminal block used on the relay, RTD/CLIO input, heavy duty and medium duty, which are fastened to the rear panel using screws (crosshead on the heavy and medium duty blocks, slotted on RTD/CLIO input blocks), as in Figure 1.

Note: The use of a magnetic bladed screwdriver is recommended to minimize the risk of the screws being left in the terminal block or lost.

Without exerting excessive force or damaging the scheme wiring, pull the terminal blocks away from their internal connectors.

Remove the screws used to fasten the relay to the panel, rack, etc. These are the screws with the larger diameter heads that are accessible with the access covers are fitted and open.

If the top and bottom access covers have been removed, do not remove the screws with the smaller diameter heads which are accessible. These screws hold the front panel on the relay.

Withdraw the relay from the panel, rack, etc. carefully because it will be heavy due to the internal transformers, particularly in the case of a P243 relay.

To reinstall the repaired or replacement relay follow the above instructions in reverse, ensuring that each terminal block is relocated in the correct position and the case earth, IRIG-B and fiber optic connections are replaced. To facilitate easy identification of each terminal block, they are labeled alphabetically with 'A' on the left hand side when viewed from the rear.

Once reinstallation is complete the relay should be recommissioned using the instructions in sub-documents 1 to 7 inclusive of document *P24x/EN CM*.

MT

1.3.2 Replacing a PCB

Replacing printed circuit boards and other internal components of protective relays must be undertaken only by Service Centers approved by Schneider Electric. Failure to obtain the authorization of Schneider Electric After Sales Engineers prior to commencing work may invalidate the product warranty.

Schneider Electric Automation Support teams are available world-wide, and it is strongly recommended that any repairs be entrusted to those trained personnel.

If the relay fails to operate correctly refer to document 'Problem Analysis', to help determine which PCB has become faulty.

To replace any of the relay's PCBs it is necessary to first remove the front panel.

Before removing the front panel to replace a PCB the auxiliary supply must be removed. It is also strongly recommended that the voltage and current transformer connections and trip circuit are isolated.

Open the top and bottom access covers. With size 60TE/80TE cases the access covers have two hinge-assistance T-pieces which clear the front panel molding when the access covers are opened by more than 90°, so allowing their removal.

If fitted, remove the transparent secondary front cover. A description of how to do this is given in the Introduction chapter, *P24x/EN IT*.

By applying outward pressure to the middle of the access covers, they can be bowed sufficiently so as to disengage the hinge lug allowing the access cover to be removed. The screws that fasten the front panel to the case are now accessible.

The size 40TE case has four crosshead screws fastening the front panel to the case, one in each corner, in recessed holes. The size 60TE/80TE case has an additional two screws, one midway along each of the top and bottom edges of the front plate. Undo and remove the screws.

Do not remove the screws with the larger diameter heads which are accessible when the access covers are fitted and open. These screws hold the relay in its mounting (panel or cubicle).

When the screws have been removed, the complete front panel can be pulled forward and separated from the metal case.

Caution should be observed at this stage because the front panel is connected to the rest of the relay circuitry by a 64-way ribbon cable.

Additionally, from here on, the internal circuitry of the relay is exposed and not protected against electrostatic discharges, dust ingress, etc. Therefore ESD precautions and clean working conditions should be maintained at all times.

The ribbon cable is fastened to the front panel using an IDC connector; a socket on the cable itself and a plug with locking latches on the front panel. Gently push the two locking latches outwards which will eject the connector socket slightly. Remove the socket from the plug to disconnect the front panel.

The PCBs within the relay are now accessible. Figures 20 to 22 in chapter *P24x/EN IN* show the PCB locations for the motor relays in the size 40TE case (P241), size 60TE case (P242) and size 80TE case (P243) respectively.

MT

Note: The numbers above the case outline identify the guide slot reference for each printed circuit board. Each printed circuit board has a label stating the corresponding guide slot number to ensure correct re-location after removal. To serve as a reminder of the slot numbering there is a label on the rear of the front panel metallic screen.

The 64-way ribbon cable to the front panel also provides the electrical connections between PCBs with the connections being via IDC connectors.

The slots inside the case to hold the PCBs securely in place each correspond to a rear terminal block. Looking from the front of the relay these terminal blocks are labeled from right to left.

Note: To ensure compatibility, always replace a faulty PCB with one of an identical part number. Table 1 lists the part numbers of each PCB type.

PCB		Part number	Design suffix
Front panel assembly	P241 only	GN0004 001	A/C
Front panel assembly	P242 only	GN0006 001	C
Front panel assembly	P243 only	GN0068 001	C

PCB		Part number	Design suffix
Front panel assembly	P241 only	GN0178 001	J
Front panel assembly	P242 only	GN0277 001	K
Front panel assembly	P243 only	GN0341 001	K
Power supply board	(24/48 V dc)	ZN0001 001	A
	(48/125 V dc)	ZN0001 002	A
	(110/250 V dc)	ZN0001 003	A
Power supply board	(24/48 V dc)	ZN0021 001	C/J/K
	(48/125 V dc)	ZN0021 002	C/J/K
	(110/250 V dc)	ZN0021 003	C/J/K
Relay board	7 Relay contacts	ZN0002 001	A
Relay board	7 Relay contacts	ZN0031 001	C/J
Relay board	8 Relay contacts	ZN0019 001	C/J/K
Opto board	8 Opto inputs	ZN0005 002	A
Opto board	8 Opto inputs	ZN0017 002	C
Dual char. opto board	8 Opto inputs	ZN0017 012	J/K
Dual char. input/output board	4 Opto inputs + 4 relay contacts	ZN0028 011	J
IRIG-B board (comms. assy.)	(IRIG-B modulated input only)	ZN0007 001	A/C/J/K
	(Fiber optic rear comms port only)	ZN0007 002	A/C/J/K
	(IRIG-B input modulated with fiber optic rear comms port)	ZN0007 003	A/C/J/K
RTD board	10 RTDs	ZN0010 002	A
RTD board	10 RTDs	ZN0044 002	C/J/K
2nd rear comms. board	(2nd rear comms with IRIG-B modulated)	ZN0025 001	J/K
2nd rear comms. board	(2nd rear comms port only)	ZN0025 002	J/K
Ethernet board	(Ethernet port only)	ZN0049 001	J/K
	(Ethernet with IRIG-B modulated)	ZN0049 002	J/K
	(Ethernet with IRIG-B unmodulated)	ZN0049 003	J/K
	(IRIG-B unmodulated input only)	ZN0049 004	J/K
	Redundant Ethernet Self-Healing Ring, 2 multi-mode fiber ports + Modulated IRIG-B	[ZN0071 Part 001]	J/K
	Redundant Ethernet Self-Healing Ring, 2 multi-mode fiber ports + Un-modulated IRIG-B	[ZN0071 Part 002]	J/K
	Redundant Ethernet RSTP, 2 multi-mode fiber ports + Modulated	IRIG-B [ZN0071 Part 005]	J/K
	Redundant Ethernet RSTP, 2 multi-mode fiber ports + Un-modulated IRIG-B	[ZN0071 Part 006]	J/K
	Redundant Ethernet Dual-Homing Star, 2 multi-mode fiber ports + Modulated IRIG-B	[ZN0071 Part 007]	J/K

PCB		Part number	Design suffix
	Redundant Ethernet Dual-Homing Star, 2 multi-mode fiber ports + Un-modulated IRIG-B	[ZN0071 Part 008]	J/K
CLIO board	4 inputs + 4 outputs	ZN0018 001	C/J/K
Transformer board		ZN0004 001	A/B/C/J/K
Auxiliary transformer board		ZN0011 001	A/B/C/J
Input board	8 Opto inputs	ZN0005 005	A
Input board	8 Opto inputs	ZN0017 003	B/C
Dual char. input board	8 Opto inputs	ZN0017 013	J/K
Input module (transformer + auxiliary transformer + input board)	P241 Vn = 100/120 V	GN0010 005 GN0010 092	A/C/J
	P242 Vn = 100/120 V	GN0010 005 GN0010 092	C/K
	P243 Vn = 100/120 V	GN0012 011 GN0010 029	C/K

Table 1: PCB part numbers

1.3.2.1 Replacement of the main processor board

The main processor board is located in the front panel, not within the case as with all the other PCBs.

Place the front panel with the user interface face-down and remove the six screws from the metallic screen, as shown in Figure 2. Remove the metal plate.

There are two further screws, one each side of the rear of the battery compartment recess, that hold the main processor PCB in position. Remove these screws.

The user interface keypad is connected to the main processor board via a flex-strip ribbon cable. Carefully disconnect the ribbon cable at the PCB-mounted connector as it could easily be damaged by excessive twisting.

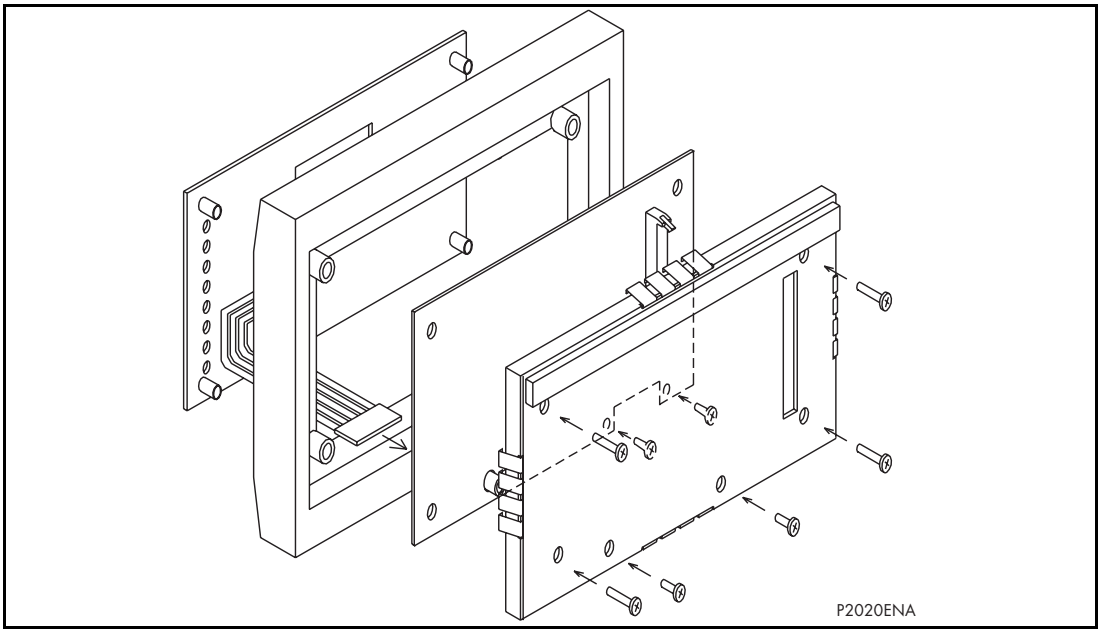

Figure 2: Front panel assembly

The front panel can then be re-assembled with a replacement PCB using the reverse procedure. Ensure that the ribbon cable is reconnected to the main processor board and all eight screws are re-fitted.

MT

Refit the front panel using the reverse procedure to that given in section 1.3.2. After refitting and closing the access covers on size 60/80TE cases, press at the location of the hinge-assistance T-pieces so that they click back into the front panel molding.

After replacement of the main processor board, all the settings required for the application will need to be re-entered. Therefore, it is useful if an electronic copy of the

application-specific settings is available on disk. Although this is not essential, it can reduce the time taken to re-enter the settings and hence the time the protection is out of service.

Once the relay has been reassembled after repair, it should be recommissioned in accordance with the instructions in sub-documents 1 to 7 inclusive of this document.

1.3.2.2 Replacement of the IRIG-B/2nd rear communications, Ethernet board

Depending on the model number of the relay, the relay may have an IRIG-B board fitted with connections for IRIG-B signals, fiber optic rear communications, both or not be present at all. The relay may also have the 2nd communications board fitted with or without IRIG-B in same position.

To replace a faulty board, disconnect all IRIG-B and/or communications connections at the rear of the relay.

The board is secured in the case by two screws accessible from the rear of the relay, one at the top and another at the bottom, as shown in Figure 3. Remove these screws carefully as they are not captive in the rear panel of the relay.

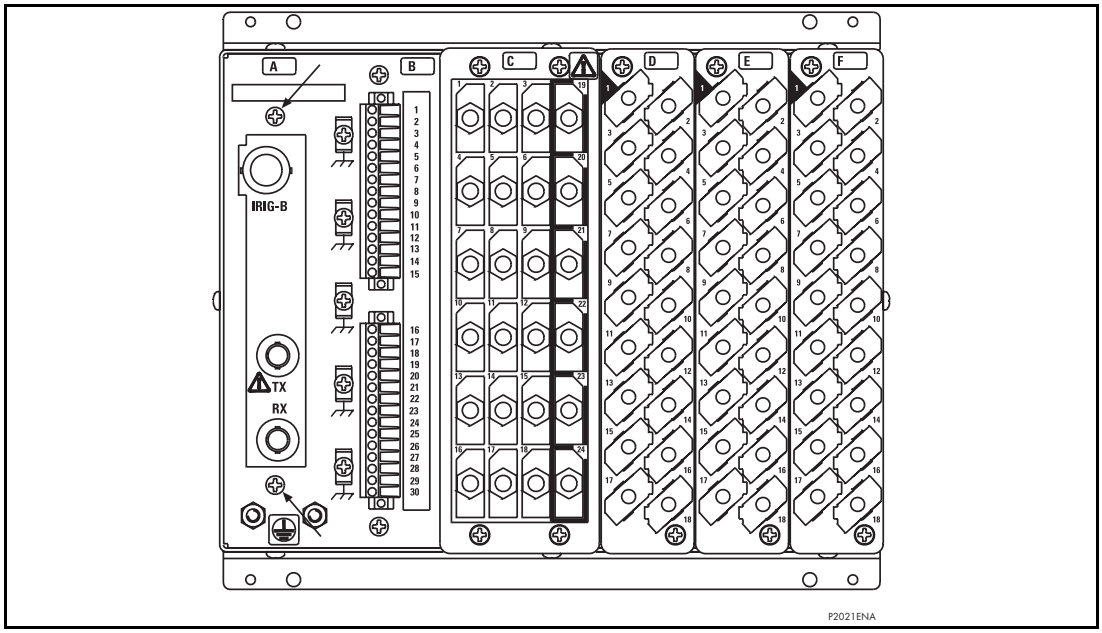

Figure 3: Location of securing screws for IRIG-B board

Gently pull the IRIG-B board or 2nd rear communications board or Ethernet board forward and out of the case.

To help identify that the correct board has been removed, Figure 4 illustrates the layout of the IRIG-B board with both IRIG-B and fiber optic rear communications port options fitted (ZN0007 003). The other versions (ZN0007 001 and ZN0007 002) use the same PCB layout but have less components fitted. Figure 5 shows the 2nd communications board with IRIG-B.

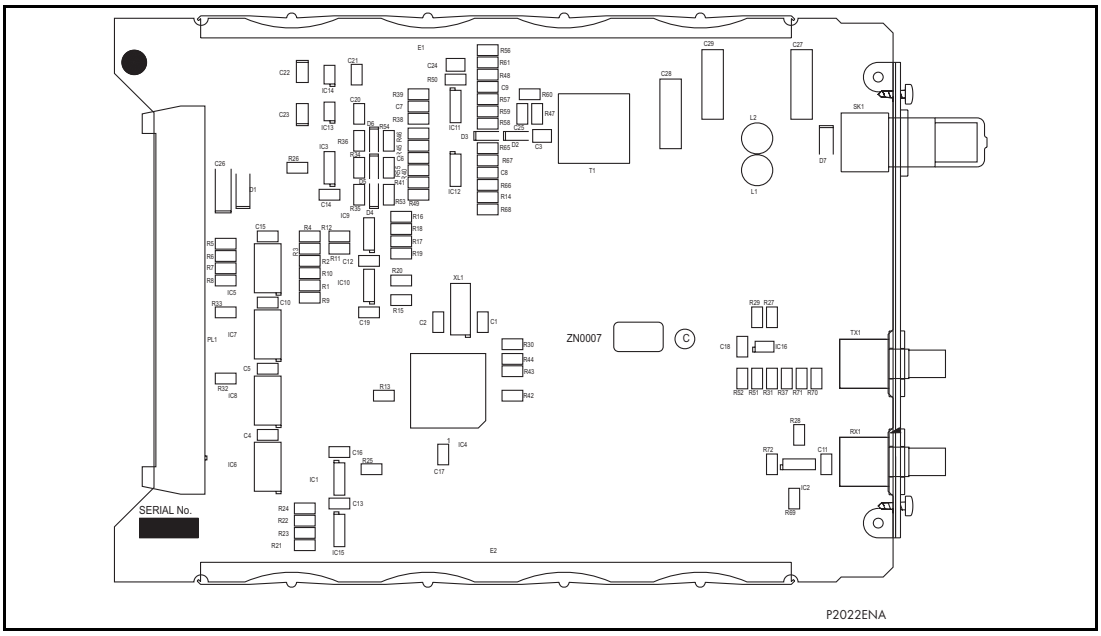

Figure 4: Typical IRIG-B board

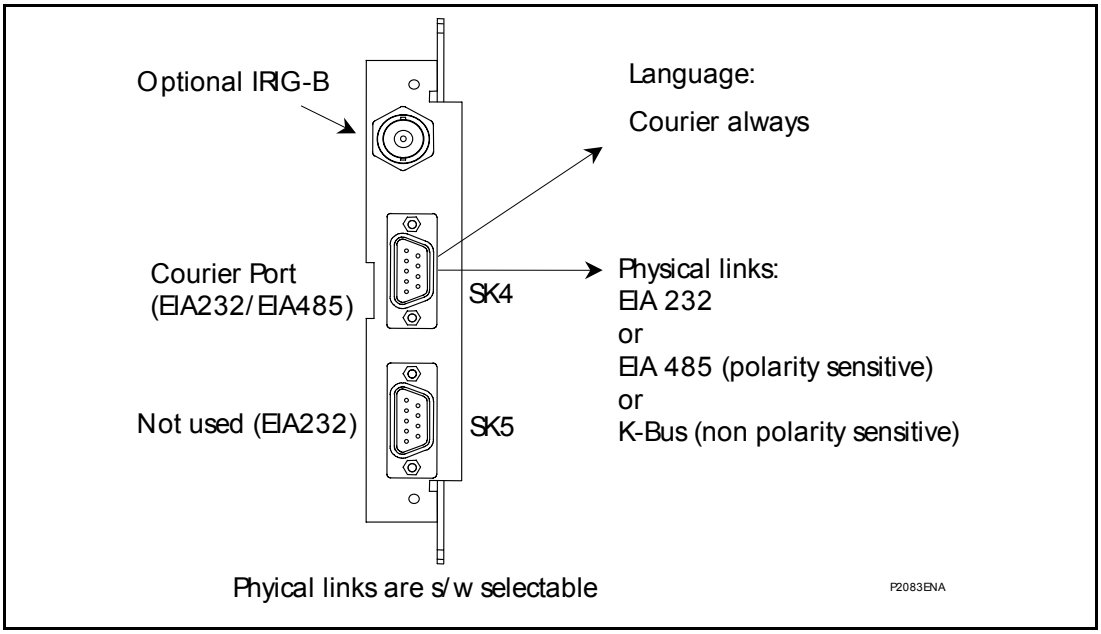

Figure 5: Second rear communications board with IRIG-B

Before fitting the replacement PCB check that the number on the round label adjacent to the front edge of the PCB matches the slot number into which it will be fitted. If the slot number is missing or incorrect write the correct slot number on the label.

The replacement PCB should be carefully slotted into the appropriate slot, ensuring that it is pushed fully back on to the rear terminal blocks and the securing screws are re-fitted.

Reconnect all IRIG-B and/or communications connections at the rear of the relay.

Refit the front panel using the reverse procedure to that given in section 1.3.2. After refitting and closing the access covers on size 60TE/80TE cases, press at the location of the hinge-assistance T-pieces so that they click back into the front panel molding.

Once the relay has been reassembled after repair, it should be recommissioned in accordance with the instructions in documents 1 to 7 in the Commissioning chapter, *P24x/EN CM*.

MT

1.3.2.3 Replacement of the input module

The input module comprises of two or three boards fastened together. In the P241/2 relays the input module consists of a transformer board and an input board. The P243 input module has three boards; input, transformer and auxiliary transformer.

The module is secured in the case by two screws on its right-hand side, accessible from the front of the relay, as shown in Figure 6. Remove these screws carefully as they are not captive in the front plate of the module.

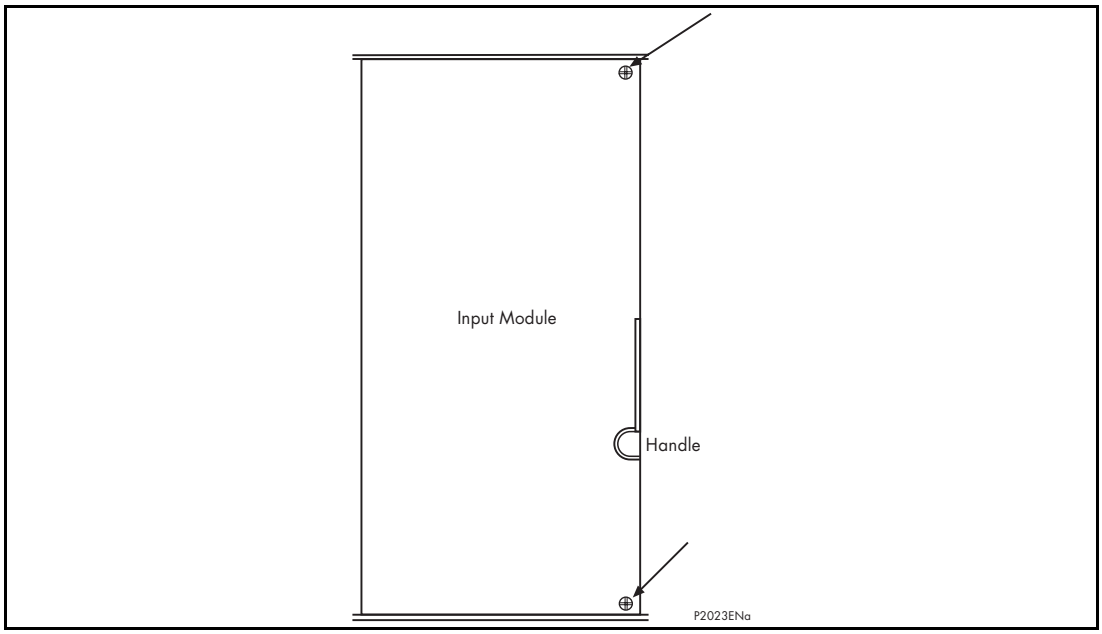

Figure 6: Location of securing screws for input module

On the right-hand side of the analog input module in P241/2 relays there is a small metal tab which brings out a handle. In the P243 relay there is an additional tab on the left hand side. Grasping the handle or handles firmly, pull the module forward, away from the rear terminal blocks. A reasonable amount of force will be required to achieve this due to the friction between the contacts of the terminal blocks; one medium duty and one heavy duty in P241 and P242 relays, one medium duty and two heavy duty in P243 relay.

Note: Care should be taken when withdrawing the input module as it will suddenly come loose once the friction of the terminal blocks has been overcome. This is particularly important with unmounted relays as the metal case will need to be held firmly whilst the module is withdrawn.

Remove the module from the case, taking care as it is heavy because it contains all the relay's input voltage and current transformers.

Before fitting the replacement module check that the number on the round label adjacent to the front edge of the PCB matches the slot number into which it will be fitted. If the slot number is missing or incorrect write the correct slot number on the label.

The replacement module can be slotted in using the reverse procedure, ensuring that it is pushed fully back on to the rear terminal blocks. To help confirm that the module has been inserted fully there is a V-shaped cut-out in the bottom plate of the case that should be fully visible. Re-fit the securing screws.

Note: The transformer and input boards within the module are calibrated together with the calibration data being stored on the input board. Therefore it is recommended that the complete module is replaced to avoid on-site recalibration having to be performed.

Refit the front panel using the reverse procedure to that given in section 1.3.2. After refitting and closing the access covers on size 60TE/80TE cases, press at the location of the hinge-assistance T-pieces so that they click back into the front panel molding.

Once the relay has been reassembled after repair, it should be recommissioned in accordance with the instructions in documents 1 to 7 inclusive of the Commissioning chapter, *P24x/EN CM*.

1.3.2.4 Replacement of the power supply board

Before carrying out any work on the equipment the user should be familiar with the contents of the Safety Section/Safety Guide SFTY/4LM/G11 or later issue and the ratings on the equipment's rating label.

The power supply board is fastened to a relay board to form the power supply module and is located on the extreme left-hand side of all MiCOM motor relays.

Pull the power supply module forward, away from the rear terminal blocks and out of the case. A reasonable amount of force will be required to achieve this due to the friction between the contacts of the two medium duty terminal blocks.

The two boards are held together with push-fit nylon pillars and can be separated by pulling them apart. Care should be taken when separating the boards to avoid damaging the inter-board connectors located near the lower edge of the PCBs towards the front of the power supply module.

The power supply board is the one with two large electrolytic capacitors on it that protrude through the other board that forms the power supply module. To help identify that the correct board has been removed, Figure 7 illustrates the layout of the power supply board for all voltage ratings.

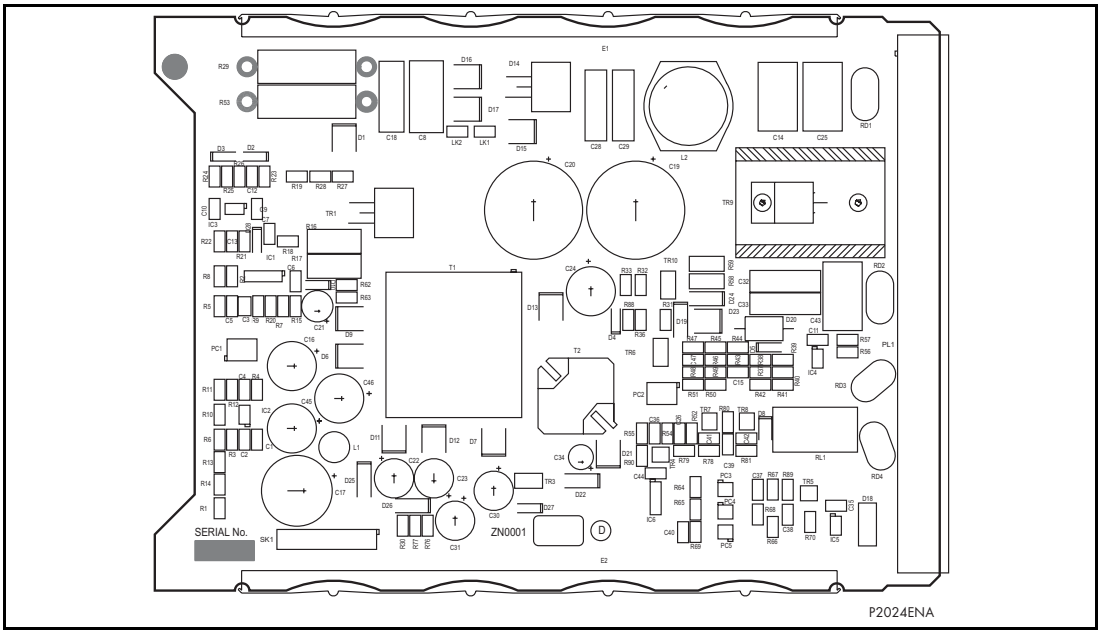

Figure 7: Typical power supply board

Before re-assembling the module with a replacement PCB check that the number on the round label adjacent to the front edge of the PCB matches the slot number into which it will be fitted. If the slot number is missing or incorrect write the correct slot number on the label.

Re-assemble the module with a replacement PCB ensuring the inter-board connectors are firmly pushed together and the four push-fit nylon pillars are securely located in their respective holes in each PCB.

Slot the power supply module back into the relay case, ensuring that it is pushed fully back on to the rear terminal blocks.

MT

Refit the front panel using the reverse procedure to that given in section 1.3.2. After refitting and closing the access covers on size 60TE/80TE cases, press at the location of the hinge-assistance T-pieces so that they click back into the front panel molding.

Once the relay has been reassembled after repair, it should be re-commissioned in accordance with the instructions in documents 1 to 7 inclusive of this document.

1.3.2.5 Replacement of the relay board in the power supply module

Remove and replace the relay board in the power supply module as described in 1.3.2.4 above.

The relay board is the one with holes cut in it to allow the transformer and two large electrolytic capacitors of the power supply board to protrude through. To help identify that the correct board has been removed, Figure 8 illustrates the layout of the relay board.

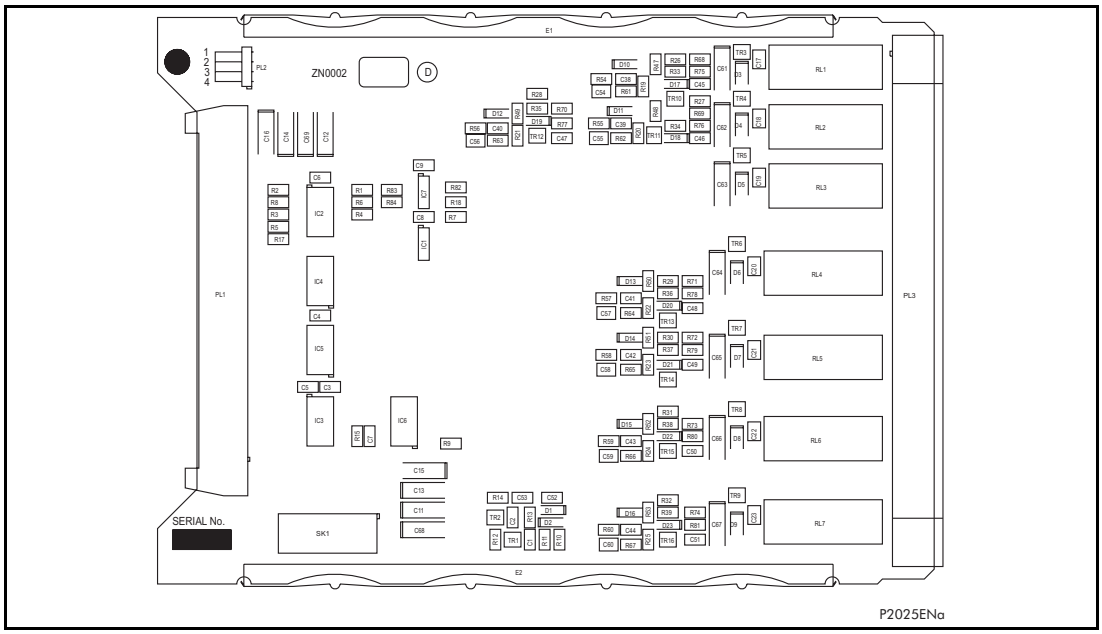

Figure 8: Typical relay board

Before re-assembling the module with a replacement relay board check that the number on the round label adjacent to the front edge of the PCB matches the slot number into which it will be fitted. If the slot number is missing or incorrect write the correct slot number on the label.

Ensure the setting of the link (located above IDC connector) on the replacement relay board is the same as the one being replaced before replacing the module in the relay case.

Once the relay has been reassembled after repair, it should be re-commissioned in accordance with the instructions in documents 1 to 7 inclusive of this document.

1.3.2.6 Replacement of the opto and separate relay boards (P241/2/3)

The P241/2/3 motor relays have additional boards. These boards provide extra output relays and optically-isolated inputs to those in the power supply and input modules respectively.

To remove either, gently pull the faulty PCB forward and out of the case.

If the relay board is being replaced, ensure the setting of the link (located above IDC connector) on the replacement relay board is the same as the one being replaced. To help identify that the correct board has been removed, Figure 8 and Figure 9 illustrate the layout of the relay and opto boards respectively.

Before fitting the replacement PCB check that the number on the round label adjacent to the front edge of the PCB matches the slot number into which it will be fitted. If the slot number is missing or incorrect write the correct slot number on the label.

MT

The replacement PCB should be carefully slid into the appropriate slot, ensuring that it is pushed fully back on to the rear terminal blocks.

Refit the front panel using the reverse procedure to that given in section 1.3.2. After refitting and closing the access covers on size 60TE/80TE cases, press at the location of the hinge-assistance T-pieces so that they click back into the front panel molding.

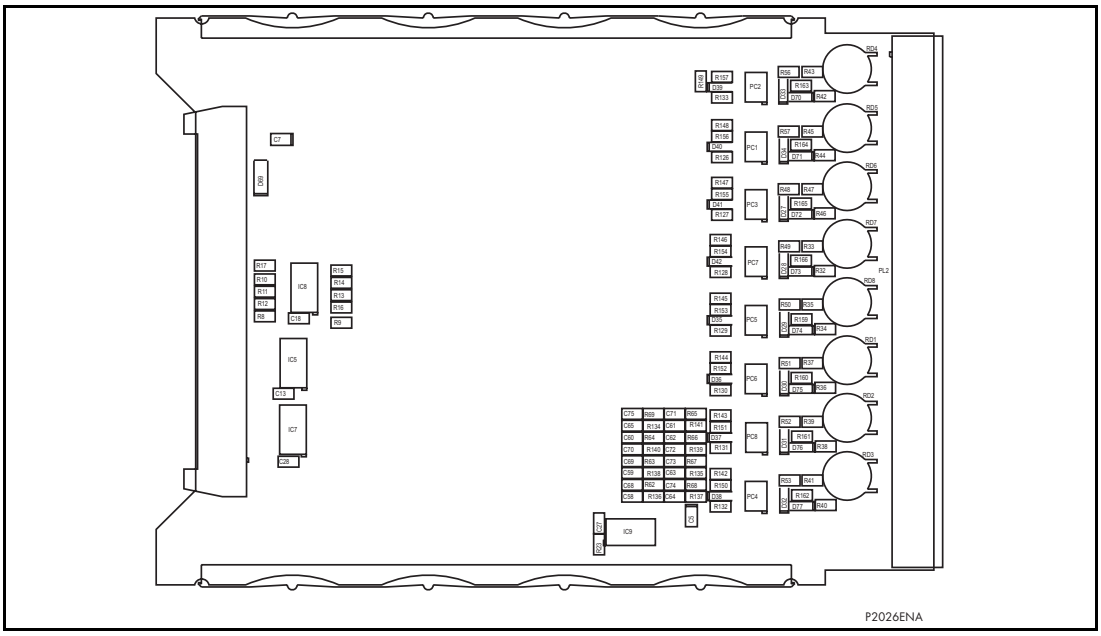

Figure 9: Typical opto board

Once the relay has been reassembled after repair, it should be re-commissioned in accordance with the instructions in documents 1 to 7 inclusive of this document.

1.3.2.7 Replacement of the RTD input board

To replace a faulty RTD input board, it is necessary to first remove the two 15-way terminal blocks; each is fastened to its other half by slotted screws above and below the row of terminals, as shown in Figure 10. Remove these screws carefully as they are not captive in the terminal blocks.

Without damaging the RTD wiring, pull the terminal blocks away from their internal halves. It is not necessary to disconnect the RTD screen connections from the spade connectors on the metal rear panel of the relay.

MT

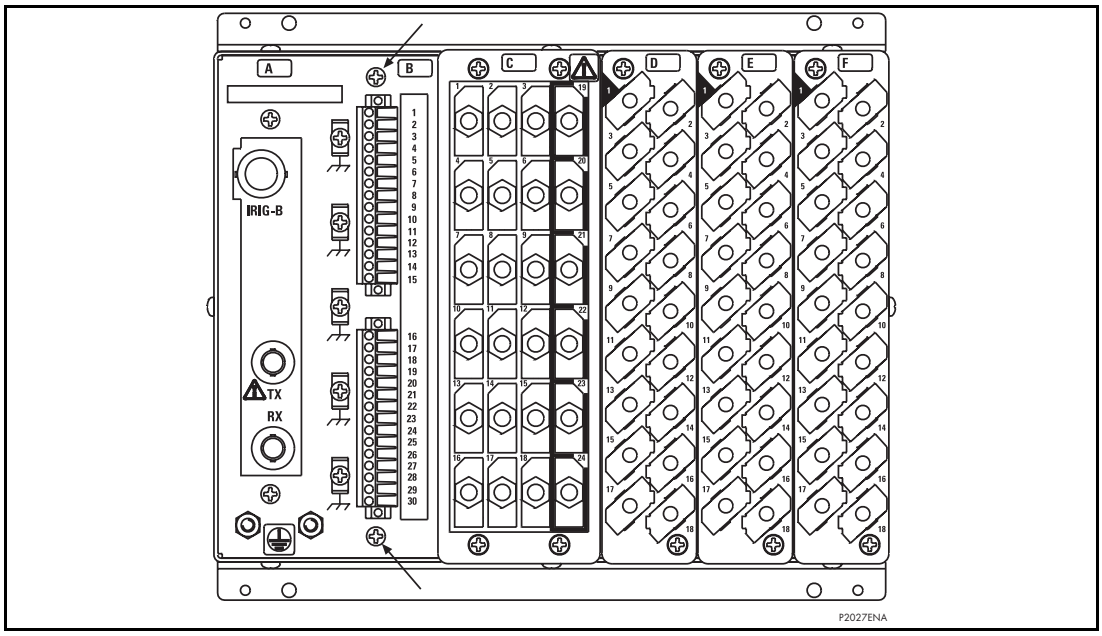

Figure 10: Location of securing screws for RTD/CLIO input board

The RTD input board is secured in the case by two screws accessible from the rear of the relay, one at the top and another at the bottom, as shown in Figure 10. Remove these screws carefully as they are not captive in the rear panel of the relay.

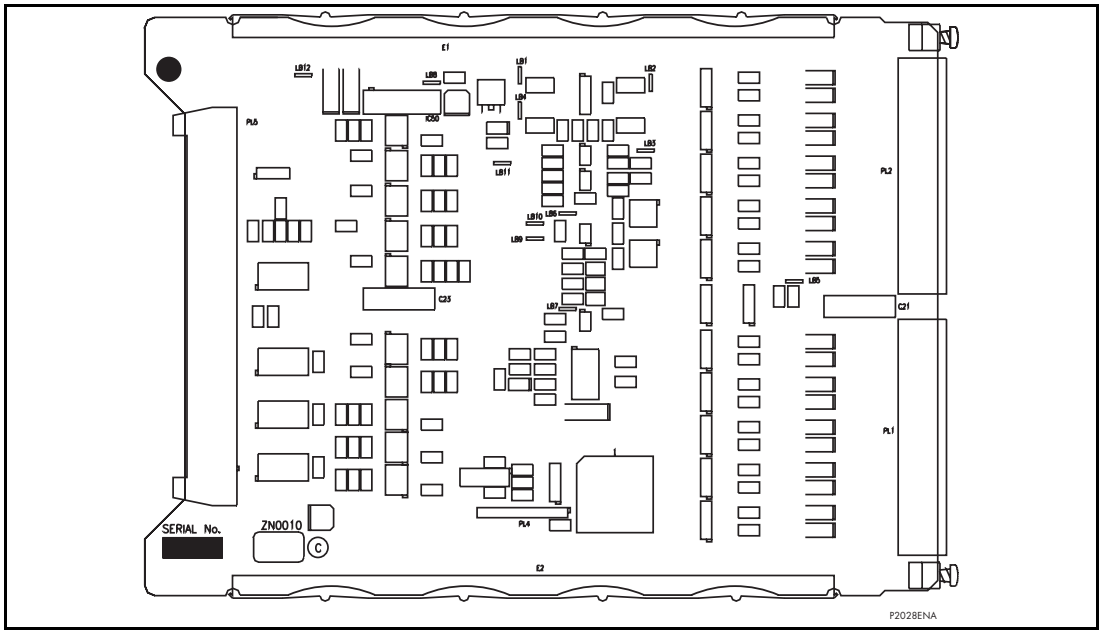

Figure 11: Typical RTD input board

Gently pull the faulty RTD input PCB forward and out of the case. To help identify that the correct board has been removed, Figure 10 illustrates the PCB layout.

The replacement PCB should be carefully slotted into the appropriate slot, ensuring that it is pushed fully back and the board securing screws are re-fitted.

Refit the RTD input terminal blocks, ensuring that they are in the correct location and that their fixing screws are replaced.

Once the relay has been reassembled after repair, it should be re-commissioned in accordance with the instructions in documents 1 to 7 inclusive of *P24x/EN CM*.

1.3.2.8 Replacement of the CLIO input board

All external connections to the current loop input output board are made via the same 15 way light duty I/O connector SL3.5/15/90F as used on the RTD board. Two such connectors are used, one for the current loop outputs and one for the current loop inputs.

To replace a faulty CLIO board, it is necessary to first remove the two 15-way terminal blocks; each is fastened to its other half by slotted screws above and below the row of terminals, as shown in Figure 11. Remove these screws carefully as they are not captive in the terminal blocks.

Note: The CLIO board occupies the same slot B as the RTD board in the 40TE case (P241) but uses a separate slot C in the 60/80TE case (P242/3).

Without damaging the CLIO wiring, pull the terminal blocks away from their internal halves. It is not necessary to disconnect the CLIO screen connections from the spade connectors on the metal rear panel of the relay.

The CLIO board is secured in the case by two screws accessible from the rear of the relay, one at the top and another at the bottom, as shown in Figure 11. Remove these screws carefully as they are not captive in the rear panel of the relay.

Gently pull the faulty CLIO PCB forward and out of the case.

The replacement PCB should be carefully slotted into the appropriate slot, ensuring that it is pushed fully back and the board securing screws are re-fitted.

Refit the CLIO terminal blocks, ensuring that they are in the correct location and that their fixing screws are replaced.

Once the relay has been reassembled after repair, it should be re-commissioned in accordance with the instructions in documents 1 to 7 inclusive of document *P24x/EN CM*.

1.4 Re-calibration

Re-calibration is not required when a PCB is replaced unless it happens to be one of the boards in the input module, the replacement of either directly affect the calibration.

Although it is possible to carry out re-calibration on site, this requires test equipment with suitable accuracy and a special calibration program to run on a PC. It is therefore recommended that the work is carried out by the manufacturer, or entrusted to an approved service centre.

1.5 Changing the battery

Each relay has a battery to maintain status data and the correct time when the auxiliary supply voltage fails. The data maintained includes event, fault and disturbance records and the thermal state at the time of failure.

This battery will periodically need changing, although an alarm will be given as part of the relay's continuous self-monitoring in the event of a low battery condition.

If the battery-backed facilities are not required to be maintained during an interruption of the auxiliary supply, the steps below can be followed to remove the battery, but do not replace with a new battery.

Before carrying out any work on the equipment the user should be familiar with the contents of the Safety Section/Safety Guide SFTY/4LM/G11 or later issue and the ratings on the equipment's rating label.

1.5.1 Instructions for replacing the battery

Open the bottom access cover on the front of the relay.

Gently extract the battery from its socket. If necessary, use a small insulated screwdriver to prize the battery free.

Ensure that the metal terminals in the battery socket are free from corrosion, grease and dust.

The replacement battery should be removed from its packaging and placed into the battery holder, taking care to ensure that the polarity markings on the battery agree with those adjacent to the socket.

Note: Only use a type ½AA Lithium battery with a nominal voltage of 3.6 V and safety approvals such as UL (Underwriters Laboratory), CSA (Canadian Standards Association) or VDE (Vereinigung Deutscher Elektrizitätswerke).

Ensure that the battery is securely held in its socket and that the battery terminals are making good contact with the metal terminals of the socket.

Close the bottom access cover.

1.5.2 Post modification tests

To ensure that the replacement battery will maintain the time and status data if the auxiliary supply fails, check cell [0806: DATE and TIME, Battery Status] reads **Healthy**.

To confirm the replacement battery is installed correctly check the commissioning test described in section 5.2.3 (**Date and Time**) of the Commissioning chapter (*P24x/EN CM*).

1.5.3 Battery disposal

The battery that has been removed should be disposed of in accordance with the disposal procedure for Lithium batteries in the country in which the relay is installed.

1.6 Cleaning

Before cleaning the relay ensure that all ac and dc supplies, current transformer and voltage transformer connections are isolated to prevent any chance of an electric shock whilst cleaning.

The equipment may be cleaned using a lint-free cloth dampened with clean water. The use of detergents, solvents or abrasive cleaners is not recommended as they may damage the relay's surface and leave a conductive residue.

MT

TROUBLESHOOTING

Date:	**24th November 2009**
Hardware suffix:	**J (P241) K (P242/P243)**
Software version:	**57**
Connection diagrams:	**10P241xx (xx = 01 to 02)** **10P242xx (xx = 01)** **10P243xx (xx = 01)**

TS

CONTENTS

1	**INTRODUCTION**	**5**
2	**INITIAL PROBLEM IDENTIFICATION**	**6**
3	**POWER UP ERRORS**	**7**
4	**ERROR MESSAGE/CODE ON POWER-UP**	**8**
5	**OUT OF SERVICE LED ILLUMINATED ON POWER UP**	**9**
6	**ERROR CODE DURING OPERATION**	**10**
7	**MAL-OPERATION OF THE RELAY DURING TESTING**	**11**
7.1	**Failure of output contacts**	**11**
7.2	**Failure of opto-isolated inputs**	**11**
7.3	**Incorrect analog signals**	**12**
7.4	**PSL editor troubleshooting**	**12**
7.4.1	Diagram reconstruction after recover from relay	12
7.4.2	PSL version check	12
8	**REPAIR AND MODIFICATION PROCEDURE**	**13**

TABLES

Table 1: Problem identification 6

Table 2: Failure of relay to power up 7

Table 3: Power-up self-test error 8

Table 4: Out of service LED illuminated 9

Table 5: Failure of output contacts 11

Table 6: Local contact list 15

TS

1 INTRODUCTION

Before carrying out any work on the equipment the user should be familiar with the contents of the Safety and Technical Data chapters and the ratings on the equipment's rating label.

The purpose of this section of the service manual is to allow an error condition on the relay to be identified so that appropriate corrective action can be taken.

Should the relay have developed a fault, it should be possible in most cases to identify which relay module requires attention. The Maintenance chapter (*P24x/EN MT*) advises on the recommended method of repair where faulty modules need replacing. It is not possible to perform an on-site repair to a faulted module.

In cases where a faulty relay/module is being returned to the manufacturer or one of their approved service centers, completed copy of the Repair/Modification Return Authorization Form located at the end of this section should be included.

2 INITIAL PROBLEM IDENTIFICATION

Consult the table below to find the description that best matches the problem experienced, and then consult the section referenced to perform a more detailed analysis of the problem.

Symptom	Refer to
Relay fails to power up	Section 4
Relay powers up - but indicates error and halts during power-up sequence	Section 5
Relay Powers up but Out of Service LED is illuminated	Section 6
Error during normal operation	Section 7
Mal-operation of the relay during testing	Section 8

Table 1: Problem identification

3 POWER UP ERRORS

If the relay does not appear to power up then the following procedure can be used to determine whether the fault is in the external wiring, auxiliary fuse, power supply module of the relay or the relay front panel.

Test	Check	Action
1	Measure auxiliary voltage on terminals 1 and 2; verify voltage level and polarity against rating the label on front. Terminal 1 is –dc, 2 is +dc	If auxiliary voltage is present and correct, then proceed to test 2. Otherwise the wiring/fuses in auxiliary supply should be checked.
2	Do LEDs/and LCD backlight illuminate on power-up, also check the N/O watchdog contact for closing.	If they illuminate or the contact closes and no error code is displayed then error is probably in the main processor board (front panel). If they do not illuminate and the contact does not close then proceed to test 3.
3	Check Field voltage output (nominally 48 V DC)	If field voltage is not present then the fault is probably in the relay power supply module.

Table 2: Failure of relay to power up

4 ERROR MESSAGE/CODE ON POWER-UP

During the power-up sequence of the relay self-testing is performed as indicated by the messages displayed on the LCD. If an error is detected by the relay during these self-tests then an error message will be displayed and the power-up sequence will be halted. If the error occurs when the relay application software is executing then a maintenance record will be created and the relay will reboot.

Test	Check	Action
1	Is an error message or code permanently displayed during power up?	If relay locks up and displays an error code permanently then proceed to test 2. If the relay prompts for input by the user proceed to test 4. If the relay re-boots automatically then proceed to test 5
2	Record displayed error, then remove and re-apply relay auxiliary supply.	Record whether the same error code is displayed when the relay is rebooted. If no error code is displayed then contact the local service center stating the error code and relay information. If the same code is displayed proceed to test 3.
3	Error code Identification Following text messages (in English) will be displayed if a fundamental problem is detected preventing the system from booting: Bus Fail – address lines SRAM Fail – data lines FLASH Fail format error FLASH Fail checksum Code Verify Fail The following hex error codes relate to errors detected in specific relay modules:	These messages indicate that a problem has been detected on the main processor board of the relay (located in the front panel).
	0c140005/0c0d0000	Input Module (inc. Opto-isolated inputs)
	0c140006/0c0e0000	Output Relay Cards
	Last 4 digits provide details on the actual error.	Other error codes relate to problems within the main processor board hardware or software. It will be necessary to contact Schneider Electric with details of the problem for a full analysis.
4	Relay displays message for corrupt settings and prompts for restoration of defaults to the affected settings.	The power up tests have detected corrupted relay settings, it is possible to restore defaults to allow the power-up to be completed. It will then be necessary to re-apply the application-specific settings.
5	Relay resets on completion of power up - record error code displayed	Error 0x0E080000, programmable scheme logic error due to excessive execution time. Restore default settings by performing a power up with ⇐ and ⇒ keys depressed; confirm restoration of defaults at prompt using ↵ key. If relay powers up successfully, check programmable logic for feedback paths. Other error codes will relate to software errors on the main processor board, contact Schneider Electric.

Table 3: Power-up self-test error

5 OUT OF SERVICE LED ILLUMINATED ON POWER UP

Test	Check	Action	
1	Using the relay menu confirm whether the Commission Test/Test Mode setting is Enabled. Otherwise proceed to test 2.	If the setting is Enabled then disable the test mode and, verify that the Out of Service LED is extinguished.	
2	Select and view the last maintenance record from the menu (in the View Records).	Check for H/W Verify Fail this indicates a discrepancy between the relay model number and the hardware; examine the “Maint. Data”, this indicates the causes of the failure using bit fields: Bit Meaning	
		0	The application type field in the model number does not match the software ID
		1	The application field in the model number does not match the software ID
		2	The variant 1 field in the model number does not match the software ID
		3	The variant 2 field in the model number does not match the software ID
		4	The protocol field in the model number does not match the software ID
		5	The language field in the model number does not match the software ID
		6	The VT type field in the model number is incorrect (110 V VTs fitted)
		7	The VT type field in the model number is incorrect (440 V VTs fitted)
		8	The VT type field in the model number is incorrect (no VTs fitted)

Table 4: Out of service LED illuminated

6 ERROR CODE DURING OPERATION

The relay performs continuous self-checking, if an error is detected then an error message will be displayed, a maintenance record will be logged and the relay will reset (after a 1.6 second delay). A permanent problem (for example due to a hardware fault) will generally be detected on the power up sequence, following which the relay will display an error code and halt. If the problem was transient in nature then the relay should reboot correctly and continue in operation. The nature of the detected fault can be determined by examination of the maintenance record logged.

There are also two cases where a maintenance record will be logged due to a detected error where the relay will not reset. These are detection of a failure of either the field voltage or the lithium battery, in these cases the failure is indicated by an alarm message; however the relay will continue to operate.

If the field voltage is detected to have failed (the voltage level has dropped below threshold), then a scheme logic signal is also set. This allows the scheme logic to be adapted in the case of this failure (for example if a blocking scheme is being used).

In the case of a battery failure it is possible to prevent the relay from issuing an alarm using the setting under the Date and Time section of the menu. The setting **Battery Alarm** can be set to **Disabled** to allow the relay to be used without a battery, without an alarm message being displayed.

In the case of the RTD board failure, an alarm "RTD board fail" message is displayed, the RTD protection is disabled, but the operation of the rest of the relay functionality is unaffected.

7 MAL-OPERATION OF THE RELAY DURING TESTING

7.1 Failure of output contacts

An apparent failure of the relay output contacts may be caused by the relay configuration; the following tests should be performed to identify the real cause of the failure.

Note: The relay self-tests verify that the coil of the contact has been energized; an error will be displayed if there is a fault in the output relay board.

Test	Check	Action
1	Is the Out of Service LED illuminated?	Illumination of this LED may indicate that the relay is in test mode or that the protection has been disabled due to a hardware verify error (see Table 4).
2	Examine the Contact status in the Commissioning section of the menu.	If the relevant bits of the contact status are operated then proceed to test 4, if not proceed to test 3.
3	Verify by examination of the fault record or by using the test port whether the protection element is operating correctly.	If the protection element does not operate verify whether the test is being correctly applied. If the protection element does operate then it will be necessary to check the programmable logic, to ensure that the mapping of the protection element to the contacts is correct.
4	Using the Commissioning/Test mode function apply a test pattern to the relevant relay output contacts and verify whether they operate (note the correct external connection diagram should be consulted). A continuity tester can be used at the rear of the relay for this purpose.	If the output relay does operate then the problem must be in the external wiring to the relay. If the output relay does not operate this could indicate a failure of the output relay contacts (note that the self-tests verify that the relay coil is being energized). Ensure that the closed resistance is not too high for the continuity tester to detect.

Table 5: Failure of output contacts

7.2 Failure of opto-isolated inputs

The opto-isolated inputs are mapped onto the relay internal signals using the programmable scheme logic. If an input does not appear to be recognized by the relay scheme logic the Commission Tests/Opto Status menu option can be used to verify whether the problem is in the opto-isolated input itself or the mapping of its signal to the scheme logic functions. If the opto-isolated input does appear to be read correctly then it will be necessary to examine its mapping within the programmable logic.

If the opto-isolated input state is not being correctly read by the relay the applied signal should be tested. Verify the connections to the opto-isolated input using the correct wiring diagram and the nominal voltage settings in the **Universal Inputs**. menu. In the **Universal Inputs**. menu the nominal battery voltage can be selected for all opto inputs by selecting one of the five standard ratings in the **Global Threshold** settings. If **Custom** is selected then each opto input can individually be set to a nominal voltage value. Next, using a voltmeter verify that voltage greater than the minimum pick-up level is present on the terminals of the opto-isolated input in the energized state (see chapter *P24x/EN/TD* for opto pick-up levels). If the signal is being correctly applied to the relay then the failure may be on the input card itself. Depending on which opto-isolated input has failed this may require replacement of either the complete analog input module (the board within this module cannot be individually replaced without re-calibration of the relay) or a separate opto board.

7.3 Incorrect analog signals

The measurements may be configured in primary or secondary to assist. If it is suspected that the analog quantities being measured by the relay are not correct then the measurement function of the relay can be used to verify the nature of the problem. The measured values displayed by the relay should be compared with the actual magnitudes at the relay terminals. Verify that the correct terminals are being used (in particular the dual rated CT inputs) and that the CT and VT ratios set on the relay are correct. The correct 120 degree displacement of the phase measurements should be used to confirm that the inputs have been correctly connected.

7.4 PSL editor troubleshooting

A failure to open a connection could be because of one or more of the following:

- The relay address is not valid (note: this address is always 1 for the front port).
- Password in not valid
- Communication Set-up - COM port, Baud rate, or Framing - is not correct
- Transaction values are not suitable for the relay and/or the type of connection
- Modem configuration is not valid. Changes may be necessary when using a modem
- The connection cable is not wired correctly or broken. See MiCOM S1 Studio connection configurations
- The option switches on any KITZ101/102 this is in use may be incorrectly set

7.4.1 Diagram reconstruction after recover from relay

Although the extraction of a scheme from a relay is supported, the facility is provided as a way of recovering a scheme in the event that the original file is unobtainable.

The recovered scheme will be logically correct, but much of the original graphical information is lost. Many signals will be drawn in a vertical line down the left side of the canvas. Links are drawn orthogonally using the shortest path from A to B.

Any annotation added to the original diagram (titles, notes, etc.) are lost.

Sometimes a gate type may not be what was expected, e.g. a 1-input AND gate in the original scheme will appear as an OR gate when uploaded. Programmable gates with an inputs-to-trigger value of 1 will also appear as OR gates.

7.4.2 PSL version check

The PSL is saved with a version reference, time stamp and CRC check. This gives a visual check whether the default PSL is in place or whether a new application has been downloaded.

8 REPAIR AND MODIFICATION PROCEDURE

Please follow these steps to return an Automation product to us:

1. Get the Repair and Modification Authorization Form (RMA)

Find a copy of the RMA form at the end of this section.

2. Fill in RMA form

Fill in only the white part of the form.

Please ensure that all fields marked **(M)** are completed such as:

- Equipment model
- Model No. and Serial No.
- Description of failure or modification required (please be specific)
- Value for customs (in case the product requires export)
- Delivery and invoice addresses
- Contact details

3. Receive from local service contact, the information required to ship the product

Your local service contact will provide you with all the information:

- Pricing details
- RMA n°
- Repair center address

If required, an acceptance of the quote must be delivered before going to next stage.

4. Send the product to the repair center

- Address the shipment to the repair center specified by your local contact
- Ensure all items are protected by appropriate packaging: anti-static bag and foam protection
- Ensure a copy of the import invoice is attached with the unit being returned
- Ensure a copy of the RMA form is attached with the unit being returned
- E-mail or fax a copy of the import invoice and airway bill document to your local contact.

BLANK PAGE

REPAIR/MODIFICATION RETURN AUTHORIZATION FORM

FIELDS IN GREY TO BE FILLED IN BY SCHNEIDER ELECTRIC PERSONNEL ONLY

Reference **RMA:** _____		Date:
Repair Center Address (for shipping)	**Service Type** ☐ Retrofit ☐ Warranty ☐ Paid service ☐ Under repair contract ☐ Wrong supply	LSC PO No.:
Schneider Electric - Local Contact Details Name: Telephone No.: Fax No.: E-mail:		

IDENTIFICATION OF UNIT

Fields marked (M) are mandatory, delays in return will occur if not completed.

Model No./Part No.: **(M)**	Site Name/Project:
Manufacturer Reference: **(M)**	Commissioning Date:
Serial No.: **(M)**	Under Warranty: ☐ Yes ☐ No
Software Version:	Additional Information:
Quantity:	Customer P.O (if paid):

FAULT INFORMATION

Type of Failure		**Found Defective**	
Hardware fail	☐	During FAT/inspection	☐
Mechanical fail/visible defect	☐	On receipt	☐
Software fail	☐	During installation/commissioning	☐
Other:		During operation	☐
		Other:	
Fault Reproducibility			
Fault persists after removing, checking on test bench	☐		
Fault persists after re-energization	☐		
Intermittent fault	☐		

Description of Failure Observed or Modification Required - *Please be specific* **(M)**

FOR REPAIRS ONLY

Would you like us to install an updated firmware version after repair? ☐ Yes ☐ No

CUSTOMS & INVOICING INFORMATION

Required to allow return of repaired items

Value for Customs (M)	
Customer Invoice Address ((M) if paid)	**Customer Return Delivery Address (full street address) (M)** Part shipment accepted ☐ Yes ☐ No **OR** Full shipment required ☐ Yes ☐ No
Contact Name: Telephone No.: Fax No.: E-mail:	Contact Name: Telephone No.: Fax No.: E-mail:

REPAIR TERMS

1. **Please ensure that a copy of the import invoice is attached with the returned unit, together with the airway bill document.** Please fax/e-mail a copy of the appropriate documentation (M).
2. Please ensure the Purchase Order is released, for paid service, to allow the unit to be shipped.
3. Submission of equipment to Schneider Electric is deemed as authorization to repair and acceptance of quote.
4. Please ensure all items returned are marked as Returned for 'Repair/Modification' and **protected by appropriate packaging** (anti-static bag for each board and foam protection).

SCADA COMMUNICATIONS

Date:	**24th November 2009**
Hardware suffix:	**J (P241) K (P242/P243)**
Software version:	**57**
Connection diagrams:	**10P241xx (xx = 01 to 02)** **10P242xx (xx = 01)** **10P243xx (xx = 01)**

SC

CONTENTS

1	**INTRODUCTION**	**7**
2	**REAR PORT INFORMATION AND CONNECTION ADVICE – EIA(RS)485 PROTOCOLS**	**8**
2.1	**Rear communication port EIA(RS)485 interface**	**8**
2.2	**EIA(RS)485 bus**	**8**
2.2.1	Bus termination	8
2.2.2	Bus connections & topologies	8
2.2.3	Biasing	9
2.2.4	Courier communication	9
2.2.5	MODBUS communication	12
2.2.6	IEC 60870-5 CS 103 communication	13
2.3	**Second rear communication port**	**15**
3	**COURIER INTERFACE**	**18**
3.1	**Courier protocol**	**18**
3.2	**Front courier port**	**18**
3.3	**Supported command set**	**19**
3.4	**Relay courier database**	**20**
3.5	**Setting changes**	**20**
3.5.1	Method 1	20
3.5.2	Method 2	20
3.5.3	Relay settings	21
3.5.4	Setting transfer mode	21
3.6	**Event extraction**	**21**
3.6.1	Automatic event extraction	21
3.6.2	Event types	21
3.6.3	Event format	22
3.6.4	Manual event record extraction	22
3.7	**Disturbance record extraction**	**22**
3.8	**Programmable scheme logic settings**	**23**
4	**MODBUS INTERFACE**	**24**
4.1	**Serial interface**	**24**
4.1.1	Character framing	24
4.1.2	Maximum MODBUS query and response frame size	24
4.1.3	User configurable communications parameters	24
4.2	**Supported MODBUS query functions**	**24**
4.3	**MODBUS response code interpretation**	**25**
4.4	**Maximum query and response parameters**	**25**
4.5	**Register mapping**	**26**

4.5.1 Conventions 26
4.5.1.1 Memory pages 26
4.5.1.2 MODBUS register identification 26
4.6 Register map 27
4.7 Measurement values 28
4.8 Binary status information 32
4.9 Measurement and binary status 3x register sets 34
4.10 Controls 35
4.11 Event extraction 35
4.11.1 Manual extraction procedure 36
4.11.2 Automatic extraction procedure 36
4.11.3 Record data 38
4.11.4 Event record deletion 40
4.11.5 Event record support 40
4.12 Disturbance record extraction 40
4.12.1 Interface registers 41
4.12.2 Extraction procedure 42
4.12.2.1 Manual extraction procedure 43
4.12.2.2 Automatic extraction procedure - option 1 44
4.12.2.3 Automatic extraction procedure - option 2 45
4.12.2.4 Extracting the disturbance data 46
4.12.3 Storage of extracted data 48
4.12.3.1 Storing the configuration file 48
4.12.3.2 Storing the binary data file 48
4.12.4 Disturbance record deletion 48
4.13 Setting changes 48
4.13.1 Password protection 48
4.13.2 Control and support settings 49
4.13.2.1 Time synchronization 49
4.13.3 Disturbance recorder configuration settings 49
4.13.4 Protection settings 49
4.13.5 Scratchpad management 50
4.14 Register data types 50
4.15 Numeric setting (data types G2 & G35) 50
4.16 Date and time format (data type G12) 51
4.17 Power and energy measurement data formats (G29 & G125) 52
4.17.1 Data type G29 52
4.17.2 Data type G125 53
5 IEC 60870-5-103 INTERFACE 54
5.1 Physical connection and link layer 54
5.2 Initialization 54
5.3 Time synchronization 54

5.4 Spontaneous events 55
5.5 General interrogation 55
5.6 Cyclic measurements 55
5.7 Commands 55
5.8 Test mode 55
5.9 Disturbance records 55
5.10 Blocking of monitor direction 55

6 IEC 61850 ETHERNET INTERFACE 56
6.1 Introduction 56
6.2 What is IEC 61850? 56
6.2.1 Interoperability 56
6.2.2 The data model 56
6.3 IEC 61850 in MiCOM relays 58
6.3.1 Capability 58
6.3.2 IEC 61850 configuration 59
6.3.2.1 Configuration banks 60
6.3.2.2 Network connectivity 60
6.4 The data model of MiCOM relays 60
6.5 The communication services of MiCOM relays 60
6.6 Peer-to-peer (GSE) communications 61
6.6.1 Scope 61
6.6.2 IEC 61850 GOOSE configuration 61
6.7 Ethernet functionality 61
6.7.1 Ethernet disconnection 62
6.7.2 Redundant Ethernet communication ports 62
6.7.3 Loss of power 62

7 SECOND REAR COMMUNICATIONS PORT (COURIER) 63
7.1 Courier protocol 63
7.2 Event extraction 63
7.3 Disturbance record extraction 63
7.4 Connection to the second rear port 63

8 SK5 PORT CONNECTION 65

SC

FIGURES

Figure 1: EIA(RS)485 bus connection arrangements 9
Figure 2: Remote communication connection arrangements 10
Figure 3: Second rear port K-Bus application 16
Figure 4: Second rear port EIA(RS)485 example 17
Figure 5: Second rear port EIA(RS)232 example 17
Figure 6: Automatic event extraction procedure 37

Figure 7: Manual selection of a disturbance record 43
Figure 8: Automatic selection of a disturbance - option 1 44
Figure 9: Automatic selection of a disturbance - option 2 45
Figure 10: Extracting the COMTRADE configuration file 46
Figure 11: Extracting the COMTRADE binary data file 47
Figure 12: Data model layers in IEC 61850 57

TABLES

Table 1: MODBUS query functions supported by the product 25
Table 2: MODBUS response code interpretation 25
Table 3: Maximum query and response parameters for supported queries 26
Table 4: MODBUS "memory" pages reference and application 26
Table 5: Measurement data available in the P240 product range 32
Table 6: Binary status information available in the P240 product range 34
Table 7: Event record extraction registers 39
Table 8: Maintenance record types 40
Table 9: Event record 3x registers 40
Table 10: Disturbance record extraction registers 41
Table 11: Disturbance record status register (3x934) values 42
Table 12: Example of numeric settings 50
Table 13: G12 date & time data type structure 51
Table 14: Available physical links and their corresponding valid protocols 63
Table 15: EIA (RS)232 pin designation 64
Table 16: EIA (RS)485 pin designation 64

1 INTRODUCTION

This chapter describes the remote interfaces of the MiCOM relay in enough detail to allow integration within a substation communication network. As outlined in earlier chapters, the relay supports a choice of one of four protocols via the rear communication interface, selected via the model number when ordering. This is in addition to the front serial interface and 2nd rear communications port, which supports the Courier protocol only.

The rear EIA(RS)485 interface is isolated and is suitable for permanent connection whichever protocol is selected. The advantage of this type of connection is that up to 32 relays can be 'daisy chained' together using a simple twisted pair electrical connection.

For each of the protocol options, the supported functions/commands will be listed together with the database definition. The operation of standard procedures such as extraction of event, fault and disturbance records, or setting changes, will also be described.

Note: The descriptions contained within this chapter do not aim to fully detail the protocol itself. The relevant documentation for the protocol should be referred to for this information. This chapter serves to describe the specific implementation of the protocol in the relay.

2 REAR PORT INFORMATION AND CONNECTION ADVICE – EIA(RS)485 PROTOCOLS

2.1 Rear communication port EIA(RS)485 interface

The rear EIA(RS)485 communication port is provided by a 3-terminal screw connector located on the back of the relay. See chapter *P24x/EN IN* for details of the connection terminals. The rear port provides K-Bus/EIA(RS)485 serial data communication and is intended for use with a permanently wired connection to a remote control center. Of the three connections, two are for the signal connection, and the other is for the earth shield of the cable. When the K-Bus option is selected for the rear port, the two signal connections are not polarity conscious, however for MODBUS - and IEC 60870-5-103 care must be taken to observe the correct polarity.

The protocol provided by the relay is indicated in the relay menu in the 'Communications' column. Using the keypad and LCD, first check that the **Comms. settings** cell in the Configuration column is set to **Visible**, then move to the **Communications** column. The first cell down the column shows the communication protocol being used by the rear port.

2.2 EIA(RS)485 bus

The EIA(RS)485 two-wire connection provides a half-duplex fully isolated serial connection to the product. The connection is polarized and the product's connection diagrams indicate the polarization of the connection terminals. However, there is no agreed definition of which terminal is which. If the master is unable to communicate with the product, and the communication parameter's match, then it is possible that the two-wire connection is reversed.

EIA(RS)485 provides the capability to connect multiple devices to the same two-wire bus. MODBUS is a master-slave protocol, so one device will be the master, and the remaining devices will be slaves. It is not possible to connect two masters to the same bus, unless they negotiate bus access.

2.2.1 Bus termination

The EIA(RS)485 bus must have 120 Ω (O hm) ½ Watt terminating resistors fitted at either end across the signal wires - see Figure 1. Some devices may be able to provide the bus terminating resistors by different connection or configuration arrangements, in which case separate external components will not be required. However, this product does not provide such a facility, so if it is located at the bus terminus then an external termination resistor will be required.

2.2.2 Bus connections & topologies

The EIA(RS)485 standard requires that each device be directly connected to the physical cable that is the communications bus. Stubs and tees are expressly forbidden, as are star topologies. Loop bus topologies are not part of the EIA(RS)485 standard and are forbidden by it.

Two-core screened cable is recommended. The specification of the cable will be dependent on the application, although a multi-strand 0.5 mm2 per core is normally adequate. Total cable length must not exceed 1000 m. The screen must be continuous and connected at one end, normally at the master connection point; it is important to avoid circulating currents, especially when the cable runs between buildings, for both safety and noise reasons.

This product does not provide a signal ground connection. If a signal ground connection is present in the bus cable then it must be ignored, although it must have continuity for the benefit of other devices connected to the bus. At no stage must the signal ground be connected to the cables screen or to the product's chassis. This is for both safety and noise reasons.

2.2.3 Biasing

It may also be necessary to bias the signal wires to prevent jabber. Jabber occurs when the signal level has an indeterminate state because the bus is not being actively driven. This can occur when all the slaves are in receive mode and the master is slow to turn from receive mode to transmit mode. This may be because the master purposefully waits in receive mode, or even in a high impedance state, until it has something to transmit. Jabber causes the receiving device(s) to miss the first bits of the first character in the packet, which results in the slave rejecting the message and consequentially not responding. Symptoms of this are poor response times (due to retries), increasing message error counters, erratic communications, and even a complete failure to communicate.

Biasing requires that the signal lines be weakly pulled to a defined voltage level of about 1 V. There should only be one bias point on the bus, which is best situated at the master connection point. The DC source used for the bias must be clean; otherwise noise will be injected.

Note: Some devices may (optionally) be able to provide the bus bias, in which case external components will not be required.

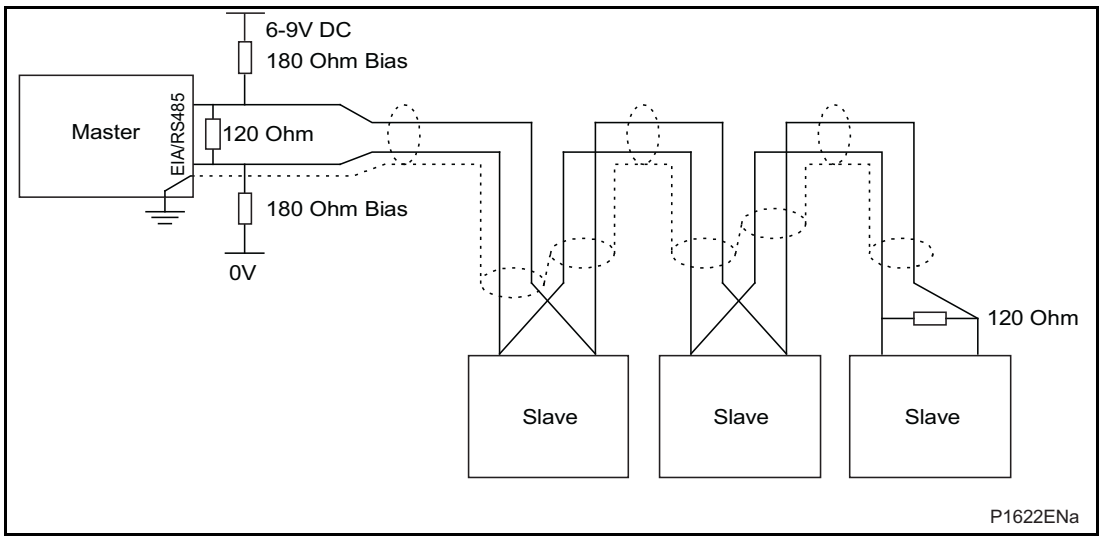

Figure 1: EIA(RS)485 bus connection arrangements

It is possible to use the product's field voltage output (48 V DC) to bias the bus using values of 2.2 kΩ (½ W) as bias resistors instead of the 180 Ω resistors shown in the above diagram.

The following warnings apply:

- It is extremely important that the 120 Ω termination resistors are fitted. Failure to do so will result in an excessive bias voltage that may damage the devices connected to the bus.
- As the field voltage is much higher than that required, Schneider Electric cannot assume responsibility for any damage that may occur to a device connected to the network as a result of incorrect application of this voltage.
- Ensure that the field voltage is not being used for other purposes (i.e. powering logic inputs) as this may cause noise to be passed to the communication network.

SC

2.2.4 Courier communication

Courier is the communication language developed by Schneider Electric to allow remote interrogation of its range of protection relays. Courier works on a master/slave basis where the slave units contain information in the form of a database, and respond with information from the database when it is requested by a master unit.

The relay is a slave unit that is designed to be used with a Courier master unit such as MiCOM S1 Studio, MiCOM S10, PAS&T or a SCADA system. MiCOM S1 Studio is a Windows NT4.0/98 compatible software package which is specifically designed for setting changes with the relay.

To use the rear port to communicate with a PC-based master station using Courier, a KITZ K-Bus to EIA(RS)232 protocol converter is required. This unit is available from Schneider Electric. A typical connection arrangement is shown below. For more detailed information on other possible connection arrangements refer to the manual for the Courier master station software and the manual for the KITZ protocol converter. Each spur of the K-Bus twisted pair wiring can be up to 1000 m in length and have up to 32 relays connected to it.

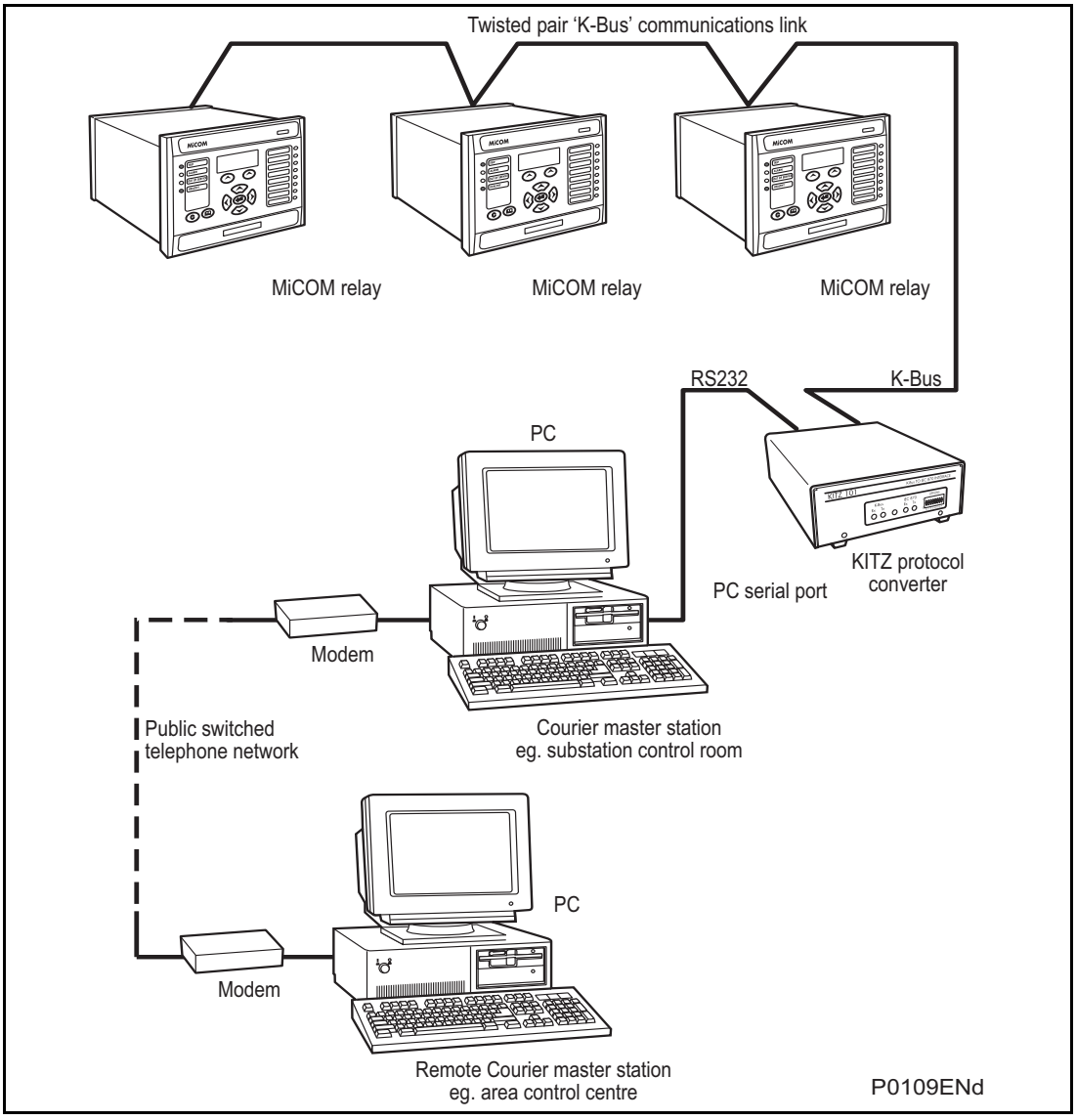

Figure 2: Remote communication connection arrangements

Having made the physical connection to the relay, the relay's communication settings must be configured. To do this use the keypad and LCD user interface. In the relay menu firstly check that the **Comms. settings** cell in the **Configuration** column is set to **Visible**, then move to the **Communications** column. Only two settings apply to the rear port using Courier, the relay's address and the inactivity timer. Synchronous communication is used at a fixed baud rate of 64 kbits/s.

SC

Move down the **Communications** column from the column heading to the first cell down which indicates the communication protocol:

RP1 Protocol
Courier

The next cell down the column controls the address of the relay:

RP1 Address
1

Since up to 32 relays can be connected to one K-Bus spur, as indicated in 0, it is necessary for each relay to have a unique address so that messages from the master control station are accepted by one relay only. Courier uses an integer number between 0 and 254 for the relay address that is set with this cell. It is important that no two relays have the same Courier address. The Courier address is then used by the master station to communicate with the relay.

The next cell down controls the inactivity timer:

RP1 Inactiv timer
10.00 mins.

The inactivity timer controls how long the relay will wait without receiving any messages on the rear port before it reverts to its default state, including revoking any password access that was enabled. For the rear port this can be set between 1 and 30 minutes.

The next cell down the column controls the physical media used for the communication:

RP1 Physical link
Copper

The default setting is to select the copper electrical EIA(RS)485 connection. If the optional fiber optic connectors are fitted to the relay, then this setting can be changed to **Fiber optic**. This cell is also invisible if second rear comms. port is fitted as it is mutually exclusive with the fiber optic connectors.

As an alternative to running Courier over K-Bus, Courier over EIA(RS)485 may be selected. The next cell down indicates the status of the hardware, e.g.:

RP1 Card status
EIA(RS)232 OK

The next cell allows for selection of the port configuration:

RP1 Port config.
EIA(RS)232

The port can be configured for EIA(RS)485 or K-Bus.

In the case of EIA(RS)485 the next cell selects the communication mode:

RP1 Comms. Mode
IEC 60870 FT1.2

The choice is either IEC 60870 FT1.2 for normal operation with 11-bit modems, or 10-bit no parity.

In the case of EIA(RS)485 the next cell down controls the baud rate. For K-Bus the baud rate is fixed at 64kbit/second between the relay and the KITZ interface at the end of the relay spur.

RP1 Baud rate
19200

Courier communications is asynchronous. Three baud rates are supported by the relay, '9600 bits/s', '19200 bits/s' and '38400 bits/s',

Protection and disturbance recorder settings that are modified using an on-line editor such as PAS&T must be confirmed with a write to the **Save changes** cell of the **Configuration** column. Off-line editors such as MiCOM S1 Studio do not require this action for the setting changes to take effect.

2.2.5 MODBUS communication

MODBUS is a master/slave communication protocol that can be used for network control. In a similar fashion to Courier, the system works by the master device initiating all actions and the slave devices, (the relays), responding to the master by supplying the requested data or by taking the requested action. MODBUS communication is achieved via a twisted pair connection to the rear port and can be used over a distance of 1000 m with up to 32 slave devices.

To use the rear port with MODBUS communication, the relay's communication settings must be configured. To do this use the keypad and LCD user interface. In the relay menu firstly check that the **Comms. settings** cell in the **Configuration** column is set to **Visible**, then move to the **Communications** column. Four settings apply to the rear port using MODBUS that are described below. Move down the **Communications** column from the column heading to the first cell down that indicates the communication protocol:

RP1 Protocol
MODBUS

The next cell down controls the MODBUS address of the relay:

RP1 MODBUS address
23

Up to 32 relays can be connected to one MODBUS spur, and therefore it is necessary for each relay to have a unique address so that messages from the master control station are accepted by one relay only. MODBUS uses an integer number between 1 and 247 for the relay address. It is important that no two relays have the same MODBUS address. The MODBUS address is then used by the master station to communicate with the relay.

The next cell down controls the inactivity timer:

RP1 Inactiv timer
10.00 mins.

The inactivity timer controls how long the relay will wait without receiving any messages on the rear port before it reverts to its default state, including revoking any password access that was enabled. For the rear port this can be set between 1 and 30 minutes.

SC

The next cell down the column controls the baud rate to be used:

RP1 Baud rate
9600 bits/s

MODBUS communication is asynchronous. Three baud rates are supported by the relay, '9600 bits/s', '19200 bits/s' and '38400 bits/s'. It is important that whatever baud rate is selected on the relay is the same as that set on the MODBUS master station.

The next cell down controls the parity format used in the data frames:

RP1 Parity
None

The parity can be set to be one of 'None', 'Odd' or 'Even'. It is important that whatever parity format is selected on the relay is the same as that set on the MODBUS master station.

The next cell down the column controls the physical media used for the communication:

RP1 Physical link
Copper

The default setting is to select the copper electrical EIA(RS)485 connection. If the optional fiber optic connectors are fitted to the relay, then this setting can be changed to Fiber optic. This cell is also invisible if second rear comms. port is fitted as it is mutually exclusive with the fiber optic connectors.

The next cell down controls the format of the Date/Time (software 30 or later):

MODBUS
IEC time standard

The format can be selected to either 'Standard' (as per IEC 60870-5-4 'Binary Time 2 a'), the default, or to 'Reverse' for compatibility with MICOM Px20 and Px30 product ranges. For further information see Data and time format in section 4.16.

2.2.6 IEC 60870-5 CS 103 communication

The IEC specification IEC 60870-5-103: Telecontrol Equipment and Systems, Part 5: Transmission Protocols Section 103 defines the use of standards IEC 60870-5-1 to

IEC 60870-5-5 to perform communication with protection equipment. The standard configuration for the IEC 60870-5-103 protocol is to use a twisted pair connection over distances up to 1000 m. As an option for IEC 60870-5-103, the rear port can be specified to use a fiber optic connection for direct connection to a master station. The relay operates as a slave in the system, responding to commands from a master station. The method of communication uses standardized messages which are based on the VDEW communication protocol.

To use the rear port with IEC 60870-5-103 communication, the relay's communication settings must be configured. To do this use the keypad and LCD user interface. In the relay menu first check that the **Comms. settings** cell in the **Configuration** column is set to **Visible**, then move to the **Communications** column. Four settings apply to the rear port using IEC 60870-5-103 that are described below.

Move down the **Communications** column from the column heading to the first cell that indicates the communication protocol:

RP1 Protocol
IEC 60870-5-103

The next cell down controls the IEC 60870-5-103 address of the relay:

RP1 address
162

Up to 32 relays can be connected to one IEC 60870-5-103 spur, and therefore it is necessary for each relay to have a unique address so that messages from the master control station are accepted by one relay only. IEC 60870-5-103 uses an integer number between 0 and 254 for the relay address. It is important that no two relays have the same IEC 60870-5-103 address. The IEC 60870-5-103 address is then used by the master station to communicate with the relay.

The next cell down the column controls the baud rate to be used:

RP1 Baud rate
9600 bits/s

IEC 60870-5-103 communication is asynchronous. Two baud rates are supported by the relay, '9600 bits/s' and '19200 bits/s'. It is important that whatever baud rate is selected on the relay is the same as that set on the IEC 60870-5-103 master station.

The next cell down controls the period between IEC 60870-5-103 measurements:

RP1 Meas. Period
30.00 s

The IEC 60870-5-103 protocol allows the relay to supply measurements at regular intervals. The interval between measurements is controlled by this cell, and can be set between 1 and 60 seconds.

The following cell is not currently used but is available for future expansion:

RP1 Inactiv timer

The next cell down the column controls the physical media used for the communication:

RP1 Physical link
Copper

The default setting is to select the copper electrical EIA(RS)485 connection. If the optional fiber optic connectors are fitted to the relay, then this setting can be changed to **Fiber optic**. This cell is also invisible if second rear comms. port is fitted as it is mutually exclusive with the fiber optic connectors.

The next cell down can be used for monitor or command blocking:

RP1 CS103 Blocking

There are three settings associated with this cell; these are:

- Disabled — No blocking selected.
- Monitor Blocking — When the monitor blocking DDB Signal is active high, either by energizing an opto input or control input, reading of the status information and disturbance records is not permitted. When in this mode the relay returns a **Termination of general interrogation** message to the master station.
- Command Blocking — When the command blocking DDB signal is active high, either by energizing an opto input or control input, all remote commands will be ignored (i.e. CB Trip/Close, change setting group etc.). When in this mode the relay returns a **negative acknowledgement of command** message to the master station.

2.3 Second rear communication port

For relays with Courier, MODBUS, IEC 60870-5-103 or DNP3.0 protocol on the first rear communications port there is the hardware option of a second rear communications port, which will run the Courier language. This can be used over one of three physical links: twisted pair K-Bus (non-polarity sensitive), twisted pair EIA(RS)485 (connection polarity sensitive) or EIA(RS)232.

The settings for this port are located immediately below the ones for the first port as described in the Introduction chapter, P24x/EN IT. Move down the settings until the following sub heading is displayed:

Rear port2
(RP2)

The next cell down indicates the language, which is fixed at Courier for RP2:

RP2 Protocol
Courier

The next cell down indicates the status of the hardware, e.g.:

RP2 Card status
EIA(RS)232 OK

The next cell allows for selection of the port configuration:

RP2 Port config.
EIA(RS)232

The port can be configured for EIA(RS)232, EIA(RS)485 or K-Bus.

In the case of EIA(RS)232 and EIA(RS)485 the next cell selects the communication mode:

RP2 Comms. mode
IEC 60870 FT1.2

The choice is either IEC 60870 FT1.2 for normal operation with 11-bit modems, or 10-bit no parity.

The next cell down controls the comms. port address:

RP2 Address
255

Since up to 32 relays can be connected to one K-Bus spur, as indicated in 0, it is necessary for each relay to have a unique address so that messages from the master control station are accepted by one relay only. Courier uses an integer number between 0 and 254 for the relay address that is set with this cell. It is important that no two relays have the same Courier address. The Courier address is then used by the master station to communicate with the relay.

The next cell down controls the inactivity timer:

RP2 Inactivity timer
15 mins.

The inactivity timer controls how long the relay will wait without receiving any messages on the rear port before it reverts to its default state, including revoking any password access that was enabled. For the rear port this can be set between 1 and 30 minutes.

In the case of EIA(RS)232 and EIA(RS)485 the next cell down controls the baud rate. For

K-Bus the baud rate is fixed at 64kbit/second between the relay and the KITZ interface at the end of the relay spur.

RP2 Baud rate
19200

Courier communications is asynchronous. Three baud rates are supported by the relay, '9600 bits/s', '19200 bits/s' and '38400 bits/s'.

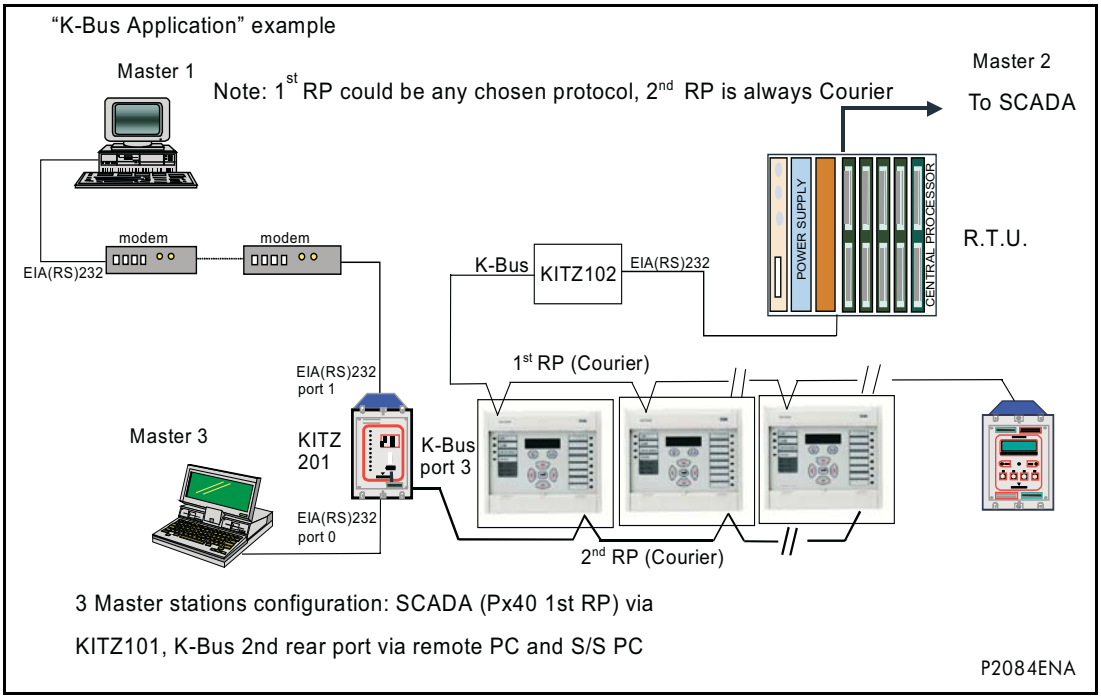

Figure 3: Second rear port K-Bus application

SC

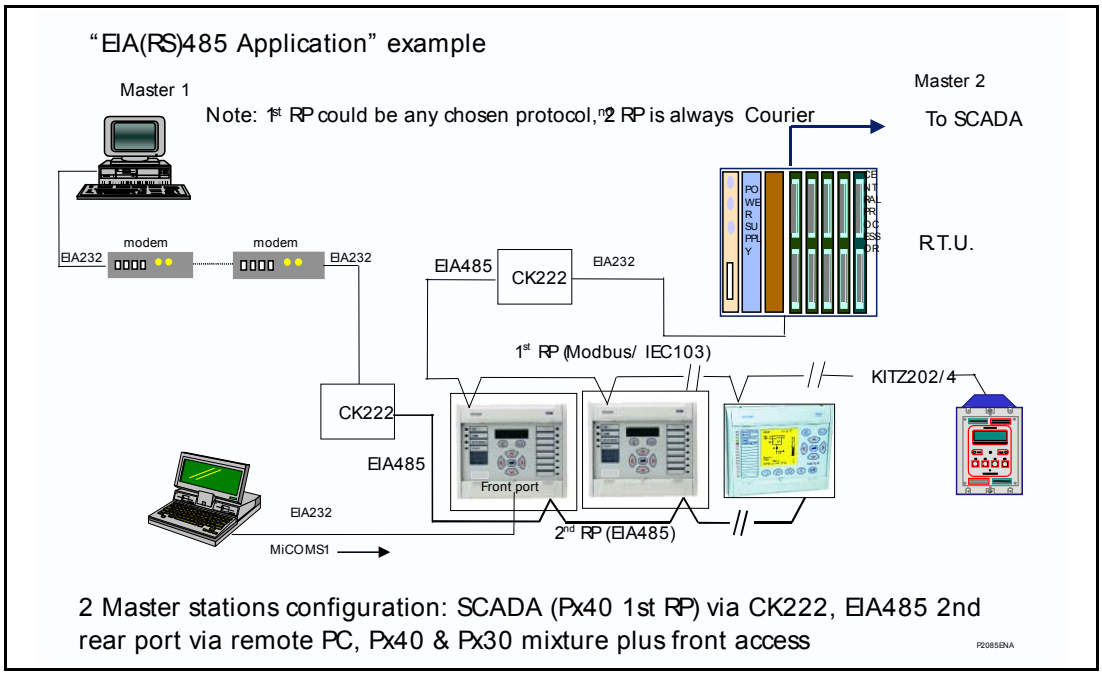

Figure 4: Second rear port EIA(RS)485 example

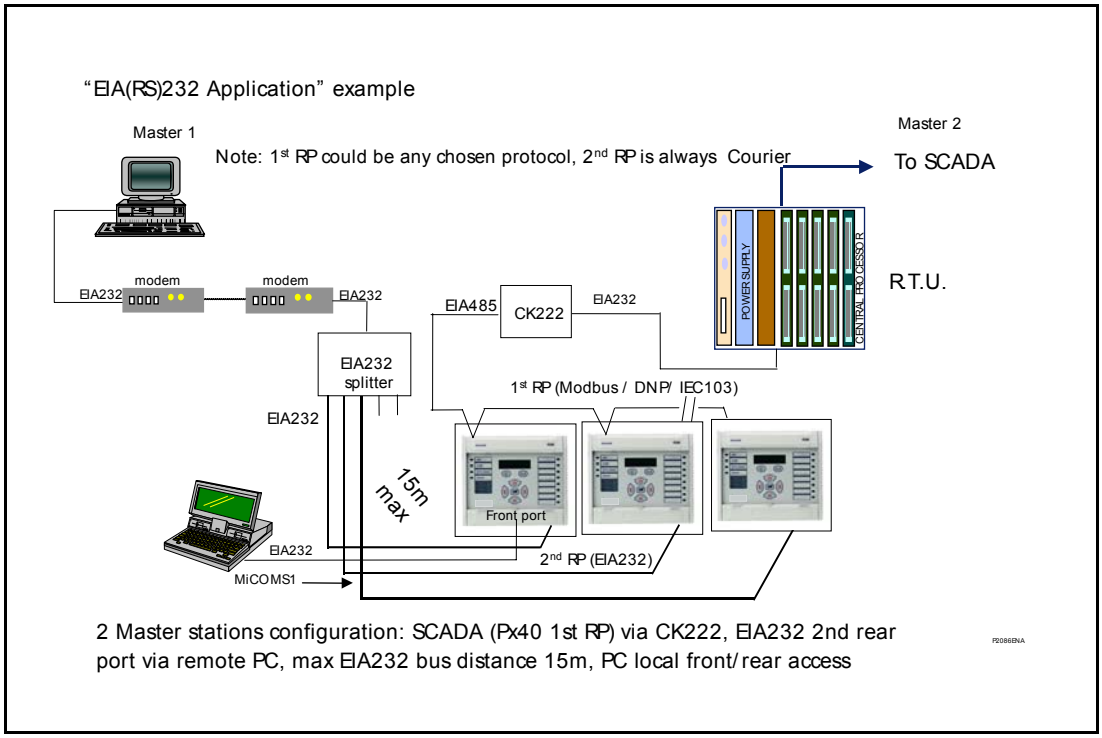

Figure 5: Second rear port EIA(RS)232 example

SC

3 COURIER INTERFACE

3.1 Courier protocol

Courier is an Schneider Electric communication protocol. The concept of the protocol is that a standard set of commands is used to access a database of settings and data within the relay. This allows a generic master to be able to communicate with different slave devices. The application specific aspects are contained within the database itself rather than the commands used to interrogate it; i.e. the master station does not need to be pre-configured.

The same protocol can be used via two physical links K-Bus or EIA(RS)232.

K-Bus is based on EIA(RS)485 voltage levels with HDLC FM0 encoded synchronous signaling and its own frame format. The K-Bus twisted pair connection is unpolarized, whereas the EIA(RS)485 and EIA(RS)232 interfaces are polarized.

The EIA(RS)232 interface uses the IEC 60870-5 FT1.2 frame format.

The relay supports an IEC 60870-5 FT1.2 connection on the front-port. This is intended for temporary local connection and is not suitable for permanent connection. This interface uses a fixed baud rate, 11-bit frame, and a fixed device address.

The rear interface is used to provide a permanent connection for K-Bus and allows multi-drop connection.

Note: Although K-Bus is based on EIA(RS)485 voltage levels it is a synchronous HDLC protocol using FM0 encoding. It is not possible to use a standard EIA(RS)232 to EIA(RS)485 converter to convert IEC 60870-5 FT1.2 frames to K-Bus. Nor is it possible to connect K-Bus to an EIA(RS)485 computer port. A protocol converter, such as the KITZ101, should be employed for this purpose.

The following documentation should be referred to for a detailed description of the Courier protocol, command-set and link description.

R6509 K-Bus Interface Guide

R6510 IEC 60870 Interface Guide

R6511 Courier Protocol

R6512 Courier User Guide

3.2 Front courier port

The front EIA(RS)232[1] 9 pin port supports the Courier protocol for one to one communication. It is designed for use during installation and commissioning/maintenance and is not suitable for permanent connection. Since this interface will not be used to link the relay to a substation communication system, some of the features of Courier are not implemented. These are as follows:

SC

Automatic extraction of Event Records:

Courier Status byte does not support the Event flag.

Send Event/Accept Event commands are not implemented.

Automatic extraction of Disturbance records:

Courier Status byte does not support the Disturbance flag.

Busy Response Layer:

Courier Status byte does not support the Busy flag, the only response to a request will be the final data.

[1] This port is actually compliant to EIA(RS)574; the 9-pin version of EIA(RS)232, see www.tiaonline.org.

Fixed Address:

The address of the front Courier port is always 1; the Change Device address command is not supported.

Fixed Baud Rate:

19200 bps.

Note: Although automatic extraction of event and disturbance records is not supported it is possible to manually access this data via the front port.

3.3 Supported command set

The following Courier commands are supported by the relay:

Protocol Layer

- Reset Remote Link
- Poll Status
- Poll Buffer*

Low Level Commands

- Send Event*
- Accept Event*
- Send Block
- Store Block Identifier
- Store Block Footer

Menu Browsing

- Get Column Headings
- Get Column Text
- Get Column Values
- Get Strings
- Get Text
- Get Value
- Get Column Setting Limits

Setting Changes

- Enter Setting Mode
- Preload Setting
- Abort Setting
- Execute Setting
- Reset Menu Cell
- Set Value

Control Commands

- Select Setting Group
- Change Device Address*
- Set Real Time

Note: Commands indicated with an * are not supported via the front Courier port.

3.4 Relay courier database

The Courier database is a two dimensional structure with each cell in the database being referenced by a row and column address. Both the column and the row can take a range from 0 to 255. Addresses in the database are specified as hexadecimal values; e.g. 0A02 is column 0A (10 decimal) row 02. Associated settings/data will be part of the same column, row zero of the column contains a text string to identify the contents of the column, i.e. a column heading.

The Relay Menu Database document *P24x/EN MD* contains the complete database definition for the relay. For each cell location the following information is stated:

- Cell Text
- Cell Datatype
- Cell value
- Whether the cell is settable, if so
- Minimum value
- Maximum value
- Step size
- Password Level required to allow setting changes
- String information (for Indexed String or Binary flag cells)

3.5 Setting changes

(See R6512, Courier User Guide - Chapter 9)

Courier provides two mechanisms for making setting changes, both of these are supported by the relay. Either method can be used for editing any of the settings within the relay database.

3.5.1 Method 1

This uses a combination of three commands to perform a settings change:

- Enter Setting Mode - Checks that the cell is settable and returns the limits.
- Pre-load Setting - Places a new value to the cell, this value is echoed to ensure that setting corruption has not taken place, the validity of the setting is not checked by this action.
- Execute Setting - Confirms the setting change, if the change is valid then a positive response will be returned, if the setting change fails then an error response will be returned.
- Abort Setting - This command can be used to abandon the setting change.

This is the most secure method and is ideally suited to on-line editors as the setting limits are taken from the relay before the setting change is made. However, this method can be slow if many settings are being changed as three commands are required for each change.

SC

3.5.2 Method 2

The Set Value command can be used to directly change a setting, the response to this command will be either a positive confirm or an error code to indicate the nature of a failure. This command can be used to implement a setting more rapidly then the previous method, however the limits are not extracted from the relay. This method is most suitable for off-line setting editors such as MiCOM S1 Studio, or for the issuing of pre-configured (SCADA) control commands.

3.5.3 Relay settings

There are three categories of settings within the relay database:

- Control and support
- Disturbance recorder
- Protection settings group

Setting changes made to the control and support settings are implemented immediately and stored in non-volatile memory. Changes made to either the Disturbance recorder settings or the Protection Settings Groups are stored in a 'scratchpad' memory and are not immediately implemented by the relay.

To action setting changes stored in the scratchpad the Save Changes cell in the Configuration column must be written to. This allows the changes to either be confirmed and stored in non-volatile memory, or the setting changes to be aborted.

3.5.4 Setting transfer mode

If it is necessary to transfer all of the relay settings to or from the relay a cell within the Communication System Data column can be used. This cell (location BF03) when set to 1 makes all of the relay settings visible. Any setting changes made, with the relay set in this mode, are stored in scratchpad memory (including control and support settings). When the value of BF03 is set back to 0 any setting changes are verified and stored in non-volatile memory.

3.6 Event extraction

Events can be extracted either automatically (rear port only) or manually (either Courier port). For automatic extraction all events are extracted in sequential order using the standard Courier event mechanism, this includes fault/maintenance data if appropriate. The manual approach allows the user to select events, faults, or maintenance data at random from the stored records.

3.6.1 Automatic event extraction

(See Chapter 7 Courier User Guide, publication R6512).

This method is intended for continuous extraction of event and fault information as it is produced. It is only supported via the rear Courier port.

When new event information is created the Event bit is set within the Status byte, this indicates to the Master device that event information is available. The oldest, unextracted event can be extracted from the relay using the Send Event command. The relay will respond with the event data, which will be either a Courier Type 0 or Type 3 event. The Type 3 event is used for fault records and maintenance records.

Once an event has been extracted from the relay, the Accept Event can be used to confirm that the event has been successfully extracted. If all events have been extracted then the event bit will reset, if there are more events still to be extracted the next event can be accessed using the Send Event command as before.

3.6.2 Event types

Events will be created by the relay under the following circumstances:

- Change of state of output contact
- Change of state of opto input
- Protection element operation
- Alarm condition
- Setting change
- Password entered/timed-out
- Fault record (Type 3 Courier Event)
- Maintenance record (Type 3 Courier Event)

3.6.3 Event format

The Send Event command results in the following fields being returned by the relay:

- Cell reference
- Time stamp
- Cell text
- Cell value

The Relay Menu Database, *P24x/EN MD*, contains a table of the events created by the relay and indicates how the contents of the above fields are interpreted. Fault records and Maintenance records will return a Courier Type 3 event, which contains the above fields together with two additional fields:

- Event extraction column
- Event number

These events contain additional information that is extracted from the relay using the referenced extraction column. Row 01 of the extraction column contains a setting that allows the fault/maintenance record to be selected. This setting should be set to the event number value returned within the record; the extended data can be extracted from the relay by uploading the text and data from the column.

3.6.4 Manual event record extraction

Column 01 of the database can be used for manual viewing of event, fault, and maintenance records. The contents of this column will depend on the nature of the record selected. It is possible to select events by event number and to directly select a fault record or maintenance record by number.

Event Record selection (Row 01)

This cell can be set to a value between 0 to 249 to select which of the 250 stored events is selected, 0 will select the most recent record; 249 the oldest stored record. For simple event records, (Type 0) cells 0102 to 0105 contain the event details. A single cell is used to represent each of the event fields. If the event selected is a fault or maintenance record (Type 3) then the remainder of the column will contain the additional information.

Fault Record Selection (Row 05)

This cell can be used to directly select a fault record using a value between 0 and 4 to select one of up to five stored fault records. (0 will be the most recent fault and 4 will be the oldest). The column will then contain the details of the fault record selected.

Maintenance Record Selection (Row F0)

This cell can be used to select a maintenance record using a value between 0 and 4 and operates in a similar way to the fault record selection.

Note: If this column is used to extract event information from the relay the number associated with a particular record will change when a new event or fault occurs.

SC

3.7 Disturbance record extraction

The stored disturbance records within the relay are accessible in a compressed format via the Courier interface. The records are extracted using column B4.

Note: Cells required for extraction of uncompressed disturbance records are not supported.

Select Record Number (Row 01)

This cell can be used to select the record to be extracted. Record 0 will be the oldest unextracted record, already extracted older records will be assigned positive values, and negative values will be used for more recent records. To facilitate automatic extraction via the rear port the Disturbance bit of the Status byte is set by the relay whenever there are unextracted disturbance records.

Once a record has been selected, using the above cell, the time and date of the record can be read from cell 02. The disturbance record itself can be extracted using the block transfer mechanism from cell B00B.

Note: The file extracted from the relay is in a compressed format. It will be necessary to use MiCOM S1 Studio to de-compress this file and save the disturbance record in the COMTRADE format.

As has been stated, the rear Courier port can be used to automatically extract disturbance records as they occur. This operates using the standard Courier mechanism defined in Chapter 8 of the Courier User Guide. The front Courier port does not support automatic extraction although disturbance record data can be extracted manually from this port.

3.8 Programmable scheme logic settings

The programmable scheme logic (PSL) settings can be uploaded from and downloaded to the relay using the block transfer mechanism defined in Chapter 12 of the Courier User Guide.

The following cells are used to perform the extraction:

- B204 Domain/: Used to select either PSL settings (Upload or download) or PSL configuration data (Upload only)
- B208 Sub-Domain: Used to select the Protection Setting Group to be uploaded/downloaded.
- B20C Version: Used on a download to check the compatibility of the file to be downloaded with the relay.
- B21C Transfer Mode: Used to set-up the transfer process.
- B120 Data Transfer Cell: Used to perform upload/download.

The programmable scheme-logic settings can be uploaded and downloaded to and from the relay using this mechanism. If it is necessary to edit the settings MiCOM S1 Studio must be used as the data format is compressed. MiCOM S1 Studio also performs checks on the validity of the settings before they are downloaded to the relay.

4 MODBUS INTERFACE

The MODBUS interface is a master/slave protocol and it is defined by MODBUS.org:

See www.modbus.org

MODBUS Serial Protocol Reference Guide: PI-MBUS-300 Rev. E

4.1 Serial interface

The MODBUS interface uses the first rear EIA(RS)485 (RS485) two-wire port "RP1". The port is designated "EIA(RS)485/K-Bus Port" on the external connection diagrams.

The interface uses the MODBUS "RTU" mode of communication, rather than the "ASCII" mode since it provides for more efficient use of the communication bandwidth and is in wide spread use. This mode of communication is defined by the MODBUS standard, noted above.

4.1.1 Character framing

The character framing is 1 start bit, 8 bit data, either 1 parity bit and 1 stop bit, or two stop bits. This gives 11 bits per character.

4.1.2 Maximum MODBUS query and response frame size

The maximum query and response frame size is limited to 260 bytes in total. (This includes the frame header and CRC footer, as defined by the MODBUS protocol.).

4.1.3 User configurable communications parameters

The following parameters can be configured for this port using the product's front panel user interface (in the communications sub-menu):

- Baud rate: 9600, 19200, 38400bps
- Device address: 1 - 247
- Parity: Odd, even, none.
- Inactivity time: [2] 1 - 30 minutes

Note: The MODBUS interface communication parameters are not part of the product's setting file and cannot be configured with the MiCOM S1 Studio setting support tool.

4.2 Supported MODBUS query functions

The MODBUS protocol provides numerous query functions, of which the product supports the subset in Table 1: . The product will respond with exception code 01 if any other query function is received by it.

Query function code	MODBUS query name	Application
01	Read Coil Status	Read status of output contacts (0x addresses)
02	Read Input Status	Read status of opto-isolated status inputs (1x addresses)
03	Read Holding Registers	Read setting values (4x addresses)
04	Read Input Registers	Read measurement values (3x addresses)
06	Preset Single Register	Write single setting value (4x addresses)
07	Read Exception Status	Read relay status, same value as register 3x1

SC

2 The inactivity timer is started (or restarted) whenever the active password level is reduced upon the entry of a valid password, or a change is made to the setting scratchpad. When the timer expires, the password level is restored to its default level and any pending (uncommitted) setting changes on the scratch pad are discarded. The inactivity timer is disabled when the password level is at its default value and there are no settings pending on the scratchpad. See section 4.13.

Query function code	MODBUS query name	Application
08	Diagnostics	Application defined by the MODBUS protocol specification
11	Fetch Communication Event Counter	
12	Fetch Communication Event Log	
16	Preset Multiple Registers	Write multiple setting values (4x addresses)

Table 1: MODBUS query functions supported by the product

4.3 MODBUS response code interpretation

Code	MODBUS response name	Product interpretation
01	Illegal Function Code	The function code transmitted is not supported.
02	Illegal Data Address	The start data address in the request is not an allowable value. If any of the addresses in the range cannot be accessed due to password protection then all changes within the request are discarded and this error response will be returned. **Note:** If the start address is correct but the range includes non-implemented addresses this response is not produced.
03	Illegal Value	A value referenced in the data field transmitted by the master is not within range. Other values transmitted within the same packet will be executed if inside range.
04	Slave Device Failure	An exception arose during the processing of the received query that is not covered by any of the other exception codes in this table.
05	Acknowledge	Not used.
06	Slave Device Busy	The write command cannot be implemented due to the product's internal database being locked by another interface. This response is also produced if the product is busy executing a previous request.

Table 2: MODBUS response code interpretation

4.4 Maximum query and response parameters

Table 3 shows the maximum amount of data that the product can process for each of the supported query functions (see section 4.2) and the maximum amount of data that can be sent in a corresponding response frame. The principal constraint is the maximum query and response frame size, as noted in section 4.1.2. Maximum MODBUS query and response frame size.

Query function code	MODBUS query name	Maximum query data request size	Maximum response data size
01	Read Coil Status	32 coils	32 coils
02	Read Input Status	32 inputs	32 inputs
03	Read Holding Registers	127 registers	127 registers
04	Read Input Registers	127 registers	127 registers
06	Preset Single Register	1 register	1 register
07	Read Exception Status	-	8 coils
08	Diagnostics	-	-
11	Fetch Communication Event Counter	-	-

Query function code	MODBUS query name	Maximum query data request size	Maximum response data size
12	Fetch Communication Event Log	-	70 bytes
16	Preset Multiple Registers	127 registers	127 registers

Table 3: Maximum query and response parameters for supported queries

4.5 Register mapping

4.5.1 Conventions

4.5.1.1 Memory pages

The MODBUS specification associates a specific register address space to each query that has a data address field. The address spaces are often called memory pages, because they are analogs to separate memory devices. In fact a simplistic view of the queries in MODBUS is that a specified location in a specified memory device is being read or written. However, it should be borne in mind that the product's implementation of such queries is not as a literal memory access but as a translation to an internal database query[3].

Each MODBUS memory page has a name and an ID. Table 4 provides a summary of the memory pages, their Ids, and their application in the product.

It is common shorthand practice to prefix a decimal register address with the page ID and, for the most part, this is the style used in this document.

Memory page ID	MODBUS memory page name	Product application
0x	Coil Status	Read and write access of the Output Relays.
1x	Input Status	Read only access of the Opto-Isolated Status Inputs.
3x	Input Registers	Read only data access, e.g. measurements and records.
4x	Holding Registers	Read and write data access, e.g. Product configurations settings and control commands.
6x	Extended Memory File	Not used/supported.

Table 4: MODBUS "memory" pages reference and application

4.5.1.2 MODBUS register identification

The MODBUS convention is to document register identifiers with ordinal values (first, second, third…) whereas the actual protocol uses memory-page based register addresses that begin with address zero. Therefore, the first register in a memory page is register address zero. The second register is register address 1 and so on. In general, one must be subtracted from a registers identifier to find its equivalent address.

Note: The page number notation is not part of the address.

SC

3 One consequence of this is that the granularity of the register address space (in the 3x and 4x memory pages) is governed by the size of the data item being requested from the internal database. Since this is often more than the 16-bits of an individual register, not all register addresses are valid. See section 4.14 for more details.

Example:

Task:

Obtain the status of the output contacts from the Schneider Electric P243 device at address 1.

The output contact status is a 32-bit binary string held in input registers 3x8 and 3x9

(see section §4.8).

Select MODBUS function code 4 “Read input registers” and request two registers starting at input register address 7. NB the register address is one less than the required register ordinal.

The MODBUS query frame is: [4]

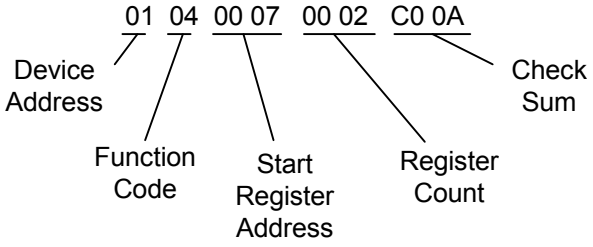

The frame is transmitted from left to right by the master device. Note that the start register address, register count and check sum are all 16-bit numbers that are transmitted in a high byte - low byte order.

The query may elicit the following response: 4

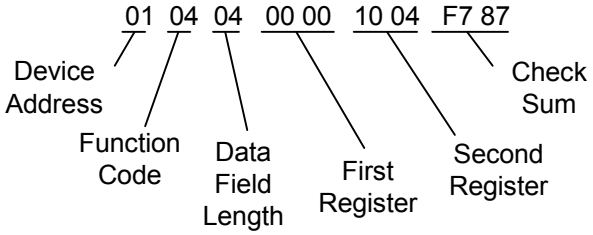

The frame was transmitted from left to right by the slave device. The response frame is valid because 8th bit of the function code field is not set. The data field length is 4 bytes since the query was a read of two 16-bit registers. The data field consists of two pairs of bytes in a high byte - low byte order with the first requested registers data coming first. Therefore, the request for the 32-bit output contact status starting at register 3x8 is 00001004h (1000000000100b), which indicates that outputs 3 and 13 are energized and the remaining outputs are de-energized.

SC

4.6 Register map

A complete map of the MODBUS addresses supported by the product is presented in the Relay Menu Database, *P24x/EN MD*.

The register map tables in this document include an “Equivalent Courier Cell” column. The cell identifiers relate to the product’s internal Courier database and may be used in cross-reference with the Courier Protocol documentation and/or the product’s front panel user interface documentation.

[4] The following frame data is shown in hexadecimal 8-bit bytes.

The “Data Format” column specifies the format of the data presented by the associated MODBUS register or registers. Section 4.14 describes the formats used.

The right-hand columns in the tables indicate whether the register is implemented in a particular product model; an asterisk indicates that the model implements the register.

4.7 Measurement values

The following table presents all of the product’s available measurements: analog values and counters. Their values are refreshed approximately every second.

Measurement name	Measurement unit	Equivalent courier cell	Start register	End register	Data format	Data size (registers)	P241	P242	P243
IA Magnitude	Amps	0201	3x00200	3x00201	G24	2	*	*	*
IA Phase Angle	Degrees	0202	3x00202		G30	1	*	*	*
IB Magnitude	Amps	0203	3x00203	3x00204	G24	2	*	*	*
IB Phase Angle	Degrees	0204	3x00205		G30	1	*	*	*
IC Magnitude	Amps	0205	3x00206	3x00207	G24	2	*	*	*
IC Phase Angle	Degrees	0206	3x00208		G30	1	*	*	*
IN Derived Mag	Amps	0209	3x00263	3x00264	G24	2	*	*	*
IN Derived Angle	Degrees	020A	3x00265		G30	1	*	*	*
ISEF Magnitude	Amps	020B	3x00209	3x00210	G24	2	*	*	*
ISEF Angle	Degrees	020C	3x00211		G30	1	*	*	*
I1 Magnitude	Amps	020D	3x00212	3x00213	G24	2	*	*	*
I2 Magnitude	Amps	020E	3x00214	3x00215	G24	2	*	*	*
I0 Magnitude	Amps	020F	3x00216	3x00217	G24	2	*	*	*
IA RMS	Amps	0210	3x00218	3x00219	G24	2	*	*	*
IB RMS	Amps	0211	3x00220	3x00221	G24	2	*	*	*
IC RMS	Amps	0212	3x00222	3x00223	G24	2	*	*	*
IN RMS	Amps	0213	3x00224	3x00225	G24	2	*	*	*
VAB Magnitude	Volts	0214	3x00226	3x00227	G24	2	*	*	*
VAB Magnitude	Volts	0214	3x00708	3x00709	G24	2	*	*	*
VAB Phase Angle	Degrees	0215	3x00228		G30	1	*	*	*
VBC Magnitude	Volts	0216	3x00229	3x00230	G24	2	*	*	*
VBC Magnitude	Volts	0216	3x00710	3x00711	G24	2	*	*	*
VBC Phase Angle	Degrees	0217	3x00266		G30	1	*	*	*
VCA Magnitude	Volts	0218	3x00231	3x00232	G24	2	*	*	*
VCA Magnitude	Volts	0218	3x00712	3x00713	G24	2	*	*	*
VCA Phase Angle	Degrees	0219	3x00233		G30	1	*	*	*
VAN Magnitude	Volts	021A	3x00234	3x00235	G24	2	*	*	*
VAN Phase Angle	Degrees	021B	3x00236		G30	1	*	*	*
VBN Magnitude	Volts	021C	3x00237	3x00238	G24	2	*	*	*
VBN Phase Angle	Degrees	021D	3x00239		G30	1	*	*	*
VCN Magnitude	Volts	021E	3x00240	3x00241	G24	2	*	*	*
VCN Phase Angle	Degrees	021F	3x00242		G30	1	*	*	*
VN Magnitude	Volts	0220	3x00243	3x00244	G24	2	*	*	*
VN Angle	Degrees	0221	3x00245		G30	1	*	*	*
Vr Antibacks Mag	Volts	0222	3x00289	3x00290	G24	2	*	*	*
V1 Magnitude	Volts	0224	3x00246	3x00247	G24	2	*	*	*
V2 Magnitude	Volts	0225	3x00248	3x00249	G24	2	*	*	*
VAN RMS	Volts	0227	3x00250	3x00251	G24	2	*	*	*
VBN RMS	Volts	0228	3x00252	3x00253	G24	2	*	*	*

Measurement name	Measurement unit	Equivalent courier cell	Start register	End register	Data format	Data size (registers)	P241	P242	P243
VCN RMS	Volts	0229	3x00254	3x00255	G24	2	*	*	*
VAB RMS	Volts	022A	3x00256	3x00257	G24	2	*	*	*
VBC RMS	Volts	022B	3x00258	3x00259	G24	2	*	*	*
VCA RMS	Volts	022C	3x00260	3x00261	G24	2	*	*	*
Frequency	Hertz	022D	3x00262		G30	1	*	*	*
Frequency	Hertz	022D	3x00721		G30	1	*	*	*
IA-2 Magnitude	Amps	0230	3x00268	3x00269	G24	2			*
IA-2 Phase Angle	Degrees	0231	3x00270		G30	1			*
IB-2 Magnitude	Amps	0232	3x00271	3x00272	G24	2			*
IB-2 Phase Angle	Degrees	0233	3x00273		G30	1			*
IC-2 Magnitude	Amps	0234	3x00274	3x00275	G24	2			*
IC-2 Phase Angle	Degrees	0235	3x00276		G30	1			*
IA Differential	Amps	0236	3x00277	3x00278	G24	2			*
IB Differential	Amps	0237	3x00279	3x00280	G24	2			*
IC Differential	Amps	0238	3x00281	3x00282	G24	2			*
IA Bias	Amps	0239	3x00283	3x00284	G24	2			*
IB Bias	Amps	023A	3x00285	3x00286	G24	2			*
IC Bias	Amps	023B	3x00287	3x00288	G24	2			*
3 Phase Watts	Watts	030A	3x00300	3x00301	G125	2	*	*	*
3 Phase Watts	Watts	030A	3x00714	3x00715	G125	2	*	*	*
3 Phase VArs	VAr	030B	3x00303	3x00304	G125	2	*	*	*
3 Phase VArs	VAr	030B	3x00717	3x00718	G125	2	*	*	*
3 Phase VA	VA	030C	3x00306	3x00307	G125	2	*	*	*
Zero Seq Power	VA	030D	3x00309	3x00310	G125	2		*	*
3Ph Power Factor	-	030E	3x00312		G30	1	*	*	*
3Ph Power Factor	-	030E	3x00720		G30	1	*	*	*
3 Phase WHours Fwd	Wh	0312	3x00313	3x00314	G125	2	*	*	*
3 Phase WHours Rev	Wh	0313	3x00316	3x00317	G125	2	*	*	*
3 Phase VArHours Fwd	VArh	0314	3x00319	3x00320	G125	2	*	*	*
3 Phase VArHours Rev	VArh	0315	3x00322	3x00323	G125	2	*	*	*
3 Phase W Fix Demand	Watts	0317	3x00325	3x00326	G125	2	*	*	*
3 Phase VArs Fix Demand	VAr	0318	3x00328	3x00329	G125	2	*	*	*
3 Phase W Peak Demand	Watts	0320	3x00331	3x00332	G125	2	*	*	*
3 Phase VArs Peak Demand	VAr	0321	3x00334	3x00335	G125	2	*	*	*
Maximum current	Amps	0326	3x00338	3x00339	G24	2	*	*	*
Maximum Voltage	Volts	0327	3x00340	3x00341	G24	2	*	*	*
Load as ratio of full load	Ratio	0401	3x00400		G30	1	*	*	*
Thermal State	Percentage	0402	3x00401		G30	1	*	*	*
Time to thermal overload trip	Seconds	0403	3x00402	3x00403	G24	2	*	*	*

Measurement name	Measurement unit	Equivalent courier cell	Start register	End register	Data format	Data size (registers)	P241	P242	P243
RTD 1 Temperature	Celsius	0405	3x00404		G10	1	*	*	*
RTD 2 Temperature	Celsius	0406	3x00405		G10	1	*	*	*
RTD 3 Temperature	Celsius	0407	3x00406		G10	1	*	*	*
RTD 4 Temperature	Celsius	0408	3x00407		G10	1	*	*	*
RTD 5 Temperature	Celsius	0409	3x00408		G10	1	*	*	*
RTD 6 Temperature	Celsius	041A	3x00409		G10	1	*	*	*
RTD 7 Temperature	Celsius	041B	3x00410		G10	1	*	*	*
RTD 8 Temperature	Celsius	041C	3x00411		G10	1	*	*	*
RTD 9 Temperature	Celsius	041D	3x00412		G10	1	*	*	*
RTD 10 Temperature	Celsius	041E	3x00413		G10	1	*	*	*
Nb of hot starts allowed	-	040F	3x00414		G1	1	*	*	*
Nb of cold starts allowed	-	0410	3x00415		G1	1	*	*	*
Time to next start	Seconds	0411	3x00416	3x00417	G24	2	*	*	*
Last start time	Seconds	0411	3x00416	3x00417	G24	2	*	*	*
Last start current	Amps	0414	3x00420	3x00421	G24	2	*	*	*
Number of motor starts	-	0415	3x00422		G1	1	*	*	*
Number of emergency restarts	-	0417	3x00423		G1	1	*	*	*
Number of reacceleration	-	0419	3x00425		G1	1	*	*	*
Motor running hours	Hours	041B	3x00427		G30	1	*	*	*
RTD Open Cct	-	041D	3x00429		G108	1	*	*	*
RTD Short Cct	-	041E	3x00430		G109	1	*	*	*
RTD Data error	-	041F	3x00431		G110	1	*	*	*
Num RTD hottest measurement	-	0421	3x00432		G1	1	*	*	*
Hottest RTD measurement	Celsius	0422	3x00433		G10	1	*	*	*
Analog Input 1 measurement	-	0424	3x00434	3x00435	G125	2	*	*	*
Analog Input 2 measurement	-	0425	3x00436	3x00437	G125	2	*	*	*
Analog Input 3 measurement	-	0426	3x00438	3x00439	G125	2	*	*	*
Analog Input 4 measurement	-	0427	3x00440	3x00441	G125	2	*	*	*
Nb of control trips	-	0501	3x00500		G1	1	*	*	*
Nb of Trip Ith>	-	0502	3x00501		G1	1	*	*	*

Measurement name	Measurement unit	Equivalent courier cell	Start register	End register	Data format	Data size (registers)	P241	P242	P243
Nb of Trip Icc>1	-	0503	3x00502		G1	1	*	*	*
Nb of Trip Icc>2	-	0504	3x00531		G1	1	*	*	*
Nb of Trip ISEF>1	-	0505	3x00503		G1	1	*	*	*
Nb of Trip ISEF>2	-	0506	3x00504		G1	1	*	*	*
Nb of Trip IEFD>1	-	0507	3x00532		G1	1	*	*	*
Nb of Trip IEFD>1	-	0508	3x00533		G1	1	*	*	*
Nb of Trip I2>1	-	0509	3x00505		G1	1	*	*	*
Nb of Trip I2>2	-	050A	3x00506		G1	1	*	*	*
Nb of Trip P0>	-	050B	3x00507		G1	1	*	*	*
Nb of Trip V<1	-	050C	3x00508		G1	1	*	*	*
Nb of Trip V<2	-	050D	3x00509		G1	1	*	*	*
Nb of Trip F<1	-	050E	3x00510		G1	1	*	*	*
Nb of Trip F<2	-	050F	3x00511		G1	1	*	*	*
Nb of Trip P<1	-	0510	3x00512		G1	1	*	*	*
Nb of Trip P<2	-	0511	3x00534		G1	1	*	*	*
Nb of Trip Cos PHI < Lead	-	0512	3x00513		G1	1	*	*	*
Nb of Trip Cos PHI < Lag	-	0513	3x00536		G1	1	*	*	*
Nb of Trip Ret P>	-	0514	3x00535		G1	1	*	*	*
Nb of Trip V>1	-	0515	3x00514		G1	1	*	*	*
Nb of Trip V>2	-	0516	3x00515		G1	1	*	*	*
Nb of Trip VN>1	-	0517	3x00516		G1	1	*	*	*
Nb of Trip VN>2	-	0518	3x00517		G1	1	*	*	*
Nb of Prolonged start	-	0519	3x00518		G1	1	*	*	*
Nb of Locked rotor-strt	-	051A	3x00519		G1	1	*	*	*
Nb of Locked rotor-run	-	051B	3x00520		G1	1	*	*	*
Nb of Trip RTD 1	-	051C	3x00521		G1	1	*	*	*
Nb of Trip RTD 2	-	051D	3x00522		G1	1	*	*	*
Nb of Trip RTD 3	-	051E	3x00523		G1	1	*	*	*
Nb of Trip RTD 4	-	051F	3x00524		G1	1	*	*	*
Nb of Trip RTD 5	-	0520	3x00525		G1	1	*	*	*
Nb of Trip RTD 6	-	0521	3x00526		G1	1	*	*	*
Nb of Trip RTD 7	-	0522	3x00527		G1	1	*	*	*
Nb of Trip RTD 8	-	0523	3x00528		G1	1	*	*	*
Nb of Trip RTD 9	-	0524	3x00529		G1	1	*	*	*
Nb of Trip RTD 10	-	0525	3x00530		G1	1	*	*	*
Nb of Trip Diff	-	0526	3x00537		G1	1			*
Nb of Trip Clio1	-	0527	3x00538		G1	1	*	*	*
Nb of Trip Clio2	-	0528	3x00539		G1	1	*	*	*
Nb of Trip Clio3	-	0529	3x00540		G1	1	*	*	*
Nb of Trip Clio4	-	052A	3x00541		G1	1	*	*	*
Nb FFail1 Trip	-	052B	3x00542		G1	1	*	*	*

Measurement name	Measurement unit	Equivalent courier cell	Start register	End register	Data format	Data size (registers)	P241	P242	P243
Nb FFail2 Trip	-	052C	3x00543		G1	1	*	*	*
Nb Trip Icc>3	-	052D	3x00502		G1	1	*	*	*
Nb Trip Icc>4	-	052E	3x00531		G1	1	*	*	*
CB Operations	-	0601	3x00600		G1	1	*	*	*
Total IA Broken	Amps	0602	3x00601	3x00602	G24	2	*	*	*
Total IB Broken	Amps	0603	3x00603	3x00604	G24	2	*	*	*
Total IC Broken	Amps	0604	3x00605	3x00606	G24	2	*	*	*
CB Operate Time	Seconds	0605	3x00607		G25	1	*	*	*

Table 5: Measurement data available in the P240 product range

4.8 Binary status information

Binary status information is available for the product's optically-isolated status inputs ("optos"), relay contact outputs, alarm flags, control inputs, internal digital data bus ("DDB"), and the front panel 25-pin test port. [5]

The product's internal digital data bus consists of 2048 binary-status flags. The allocation of the points in the DDB are largely product and version specific. See the Relay Menu Database, *P24x/EN MD*, for a definition of the product's DDB.

The relay-contact status information is available from the 0x "Coil Status" MODBUS page and from the 3x "Input Register" MODBUS page.

The current state of the optically isolated status inputs is available from the 1x "Input Status" MODBUS page and from the 3x "Input Register" MODBUS page. A single register at 3x00007 provides the status of the first 16 inputs.

The 0x "Coil Status" and 1x "Input Status" pages allow individual or blocks of binary status flags to be read. The resultant data is left aligned and transmitted in a big-endian (high order to low order) format in the response frame. Relay contact 1 is mapped to coil 1, contact 2 to coil 2 and so on. Similarly, opto-input 1 is mapped to input 1, opto-input 2 to input 2 and so on.

The following table presents the available 3x and 4x binary status information.

Name	Equivalent courier cell	Start register	End register	Data format	Data size (registers)	P241	P242	P243
Product Status	-	3x00001		G26	1	*	*	*
Opto I/P Status	0020	3x00007		G8	1	*	*	*
Relay O/P Status	0021	3x00008	3x00009	G9	2	*	*	*
Alarm Status 1	0050	3x00011	3x00012	G96	2	*	*	*
Alarm Status 2	0051	3x00013	3x00014	G111	2	*	*	*
Alarm Status 3	0052	3x00015	3x00016	G303	2	*	*	*
Ctrl I/P Status	1201	4x00950	4x00951	G202	2	*	*	*
Test Port Status	0F03	311022	311022	G124	1	*	*	*
DDB 31 - 0	0F20	311023	311024	G27	2	*	*	*
DDB 63 - 32	0F21	311025	311026	G27	2	*	*	*
DDB 95 - 64	0F22	311027	311028	G27	2	*	*	*
DDB 127 - 96	0F23	311029	311030	G27	2	*	*	*
DDB 159 - 128	0F24	311031	311032	G27	2	*	*	*

SC

[5] The test port allows the product to be configured to map up to eight of its digital data bus (DDB - see Relay Menu Database, *P24x/EN MD*) signals to eight output pins. The usual application is to control test equipment. However, since the test port output status is available on the MODBUS interface, it could be used to efficiently collect up to eight DDB signals.

Name	Equivalent courier cell	Start register	End register	Data format	Data size (registers)	P241	P242	P243
DDB 191 - 160	0F25	311033	311034	G27	2	*	*	*
DDB 223 - 192	0F26	311035	311036	G27	2	*	*	*
DDB 255 - 224	0F27	311037	311038	G27	2	*	*	*
DDB 287 - 256	0F28	311039	311040	G27	2	*	*	*
DDB 319 - 288	0F29	311041	311042	G27	2	*	*	*
DDB 351 - 320	0F2A	311043	311044	G27	2	*	*	*
DDB 383 - 352	0F2B	311045	311046	G27	2	*	*	*
DDB 415 - 384	0F2C	311047	311048	G27	2	*	*	*
DDB 447 - 416	0F2D	311049	311050	G27	2	*	*	*
DDB 479 - 448	0F2E	311051	311052	G27	2	*	*	*
DDB 511 - 480	0F2F	311053	311054	G27	2	*	*	*
DDB 543 - 512	0F30	311055	311056	G27	2	*	*	*
DDB 575 - 544	0F31	311057	311058	G27	2	*	*	*
DDB 607 - 576	0F32	311059	311060	G27	2	*	*	*
DDB 639 - 608	0F33	311061	311062	G27	2	*	*	*
DDB 671 - 640	0F34	311063	311064	G27	2	*	*	*
DDB 703 - 672	0F35	311065	311066	G27	2	*	*	*
DDB 735 - 704	0F36	311067	311068	G27	2	*	*	*
DDB 767 - 736	0F37	311069	311070	G27	2	*	*	*
DDB 799 - 768	0F38	311071	311072	G27	2	*	*	*
DDB 831 - 800	0F39	311073	311074	G27	2	*	*	*
DDB 863 - 832	0F3A	311075	311076	G27	2	*	*	*
DDB 895 - 864	0F3B	311077	311078	G27	2	*	*	*
DDB 927 - 896	0F3C	311079	311080	G27	2	*	*	*
DDB 959 - 928	0F3D	311081	311082	G27	2	*	*	*
DDB 991 - 960	0F3E	311083	311084	G27	2	*	*	*
DDB 1023 - 992	0F3F	311085	311086	G27	2	*	*	*
DDB element 1055 - 1024	0F40	311087	311088	G27	2	*	*	*
DDB element 1087 - 1056	0F41	311089	311090	G27	2	*	*	*
DDB element 1119 - 1088	0F42	311091	311092	G27	2	*	*	*
DDB element 1151 - 1120	0F43	311093	311094	G27	2	*	*	*
DDB element 1183 - 1152	0F44	311095	311096	G27	2	*	*	*
DDB element 1215 - 1184	0F45	311097	311098	G27	2	*	*	*
DDB element 1247 - 1216	0F46	311099	311100	G27	2	*	*	*
DDB element 1279 - 1248	0F47	311101	311102	G27	2	*	*	*
DDB element 1311 - 1280	0F48	311103	311104	G27	2	*	*	*
DDB element 1343 - 1312	0F49	311105	311106	G27	2	*	*	*
DDB element 1375 - 1344	0F4A	311107	311108	G27	2	*	*	*

Name	Equivalent courier cell	Start register	End register	Data format	Data size (registers)	P241	P242	P243
DDB element 1407 - 1376	0F4B	311109	311110	G27	2	*	*	*
DDB element 1439 - 1408	0F4C	311111	311112	G27	2	*	*	*
DDB element 1471 - 1440	0F4D	311113	311114	G27	2	*	*	*
DDB element 1503 - 1472	0F4E	311115	311116	G27	2	*	*	*
DDB element 1535 - 1504	0F4F	311117	311118	G27	2	*	*	*
DDB element 1567 - 1536	0F50	311119	311120	G27	2	*	*	*
DDB element 1599 - 1568	0F51	311121	311122	G27	2	*	*	*
DDB element 1631 - 1600	0F52	311123	311124	G27	2	*	*	*
DDB element 1663 - 1632	0F53	311125	311126	G27	2	*	*	*
DDB element 1695 - 1664	0F54	311127	311128	G27	2	*	*	*
DDB element 1727 - 1696	0F55	311129	311130	G27	2	*	*	*
DDB element 1759 - 1728	0F56	311131	311132	G27	2	*	*	*
DDB element 1791 - 1760	0F57	311133	311134	G27	2	*	*	*
DDB element 1823 - 1792	0F58	311135	311136	G27	2	*	*	*
DDB element 1855 - 1824	0F59	311137	311138	G27	2	*	*	*
DDB element 1887 - 1856	0F5A	311139	311140	G27	2	*	*	*
DDB element 1919 - 1888	0F5B	311141	311142	G27	2	*	*	*
DDB element 1951 - 1920	0F5C	311143	311144	G27	2	*	*	*
DDB element 1983 - 1952	0F5D	311145	311146	G27	2	*	*	*
DDB element 2015 - 1984	0F5E	311147	311148	G27	2	*	*	*
DDB element 2047 - 2016	0F5F	311149	311150	G27	2	*	*	*

Table 6: Binary status information available in the P240 product range

SC

4.9 Measurement and binary status 3x register sets

The data available from the 3x input registers is arranged into register sets. A register set is a fixed collection of values in a contiguous block of register addresses. The advantage of this is that multiple values may be read with a single MODBUS query, function code 4 “Read Input Registers”, up to the maximum data limits of the query (see section 4.4).

The definition of a register-set is specified by the selection of a start and end address, which can span multiple contiguous values in the 3x Register, see Relay Menu Database, *P24x/EN MD*. The only rule being that a register set must not result in an attempt to read only part of a multi-register data type (see section 4.14). It is permissible for a register set to span unused register locations, in which case a value of zero is returned for each such register location.

Some examples of useful register sets are:

- 3x200 to 3x288 provides a selection of measurements.
- 311023 to 311150 provide the DDB status
- 3x404 to 3x413 provide the ten RTD measurement values

There are many other possibilities dependent upon your application and an appraisal of the 3x Register Map in the Relay Menu Database, *P24x/EN MD*. The capabilities of the MODBUS master device, performance targets, and communications latencies may also influence the degree to which multiple values are read as register sets, as opposed to individually.

4.10 Controls

The following table presents MODBUS 4x "Holding Registers" that allow the external system to control aspects of the product's behavior, configuration, records, or items of plant connected to the product such as circuit breakers.

The column **Command or setting** indicates whether the control is a self-resetting "Command" or a state based "Setting".

"Command" controls will automatically return to their default value when the control action has been completed. For example, writing the "trip" value to the "CB Trip/Close" control will result in the controlled circuit breaker opening (if CB remote control is enabled, the CB has a valid state, and it was closed). The value of the "CB Trip/Close" register will automatically return to "no operation". This may lead to problems with masters that attempt to verify write requests by reading back the written value.

"Setting" controls maintain the written value, assuming that it was accepted. For example the "Active Setting Group" register reports the current active group on reads and accepts writes with a valid setting group number to change the active group to the one specified. (This assumes that setting group selection by optically isolated status inputs has not been enabled and that the specified group is enabled).

Entries without a defined setting range, as per the "min.", "max." and "step" columns, are binary-string values whose pattern is defined by its stated data type.

4.11 Event extraction

The product is capable of storing 512 event records in battery backed memory. An event record consists of a time stamp, a record type, and a set of information fields. The record type and the information fields record the event that occurred at the time captured by the time stamp.

The product has several classes of event record:

- Alarm events
- Opto-isolated status input events
- Relay contact output events
- Protection/DDB operation events
- Fault data capture events
- General events

The Relay Menu Database, *P24x/EN MD* specifies the available events.

Note: The product provides an “event filtering” feature that may be used to prevent specific events from being logged. The event filter is configured in the “Record Control” section of the product’s menu database in the MiCOM S1 Studio configuration tool.

The product supports two methods of event extraction providing either automatic or manual extraction of the stored event, fault, and maintenance records.

It is important to appreciate that the product stores event, fault, and maintenance records in three separate queues. As entries are added to the fault and maintenance queues a corresponding event is added to the event queue. Each queue is of different length and each queue may be individually cleared (see section 4.11.4). It is therefore possible to have a fault event or a maintenance event entry in the event queue with no corresponding entry in the associated queue because it has been overwritten or deleted.

The manual extraction procedure (section 4.11.1) allows each of these three queues to be read independently.

The automatic extraction procedure (section 4.11.2) reads records from the event queue. If the event record is either a fault or a maintenance record then the records extended data is read too, if it is available from their queues.

Note: Version 31 of the product introduced a new set of 3x registers for the presentation of the event and fault record data. These registers are used throughout the text of the following sub-sections. For legacy compatibility, the original registers are still provided. These are described as previous MODBUS address in the Relay Menu Database, P24x/EN MD. They should not be used for new installations. See section 4.11.5 for additional information.

4.11.1 Manual extraction procedure

There are three registers available to manually select stored records, there are also three read only registers allowing the number of stored records to be determined.

4x00100 - Select Event, 0 to 249

4x00101 - Select Fault, 0 to 4

4x00102 - Select Maintenance Record, 0 to 4

For each of the above registers, a value of zero represents the most recent stored record. The following registers can be read to indicate the numbers of the various types of record stored.

3x10000 - Number of stored event records

3x10001 - Number of stored fault records

3x10002 - Number of stored maintenance records

Each fault or maintenance record logged causes an event record to be created by the product. If this event record is selected the additional registers showing the fault or maintenance record details will also become populated.

4.11.2 Automatic extraction procedure

Automatic event-record extraction allows records to be extracted as they occur. Event records are extracted in sequential order, including any fault or maintenance data that may be associated with an event.

The MODBUS master can determine whether the product has any events stored that have not yet been extracted. This is performed by reading the product’s status register 3x00001 (G26 data type). If the event bit, of this register, is set then the product contains event records that have not yet been extracted.

To select the next event for sequential extraction, the master station writes a value of one to the record selection register 4x00400 (G18 data type). The event data together with any fault/maintenance data can be read from the registers specified in 4.11.3. Once the data has been read, the event record can be marked as having been read by writing a value of two to register 4x00400. Alternatively, since the G18 data type consists of bit fields, it is possible to both mark the current record as having been read and to automatically select the next unread record by writing a value of three to the register.

When the last (most recent) record has been accepted the event flag in the status register (3x00001) will reset. If the last record was accepted, by writing a value of three to the record selection register (4x00400), then a dummy record will appear in the event-record registers, with an "Event Type" value of 255. Attempting to select another record, when none are available, will result in a MODBUS exception code 3 - "Invalid value" (see section 4.3).

One possible event record extraction procedure is illustrated in Figure 6.

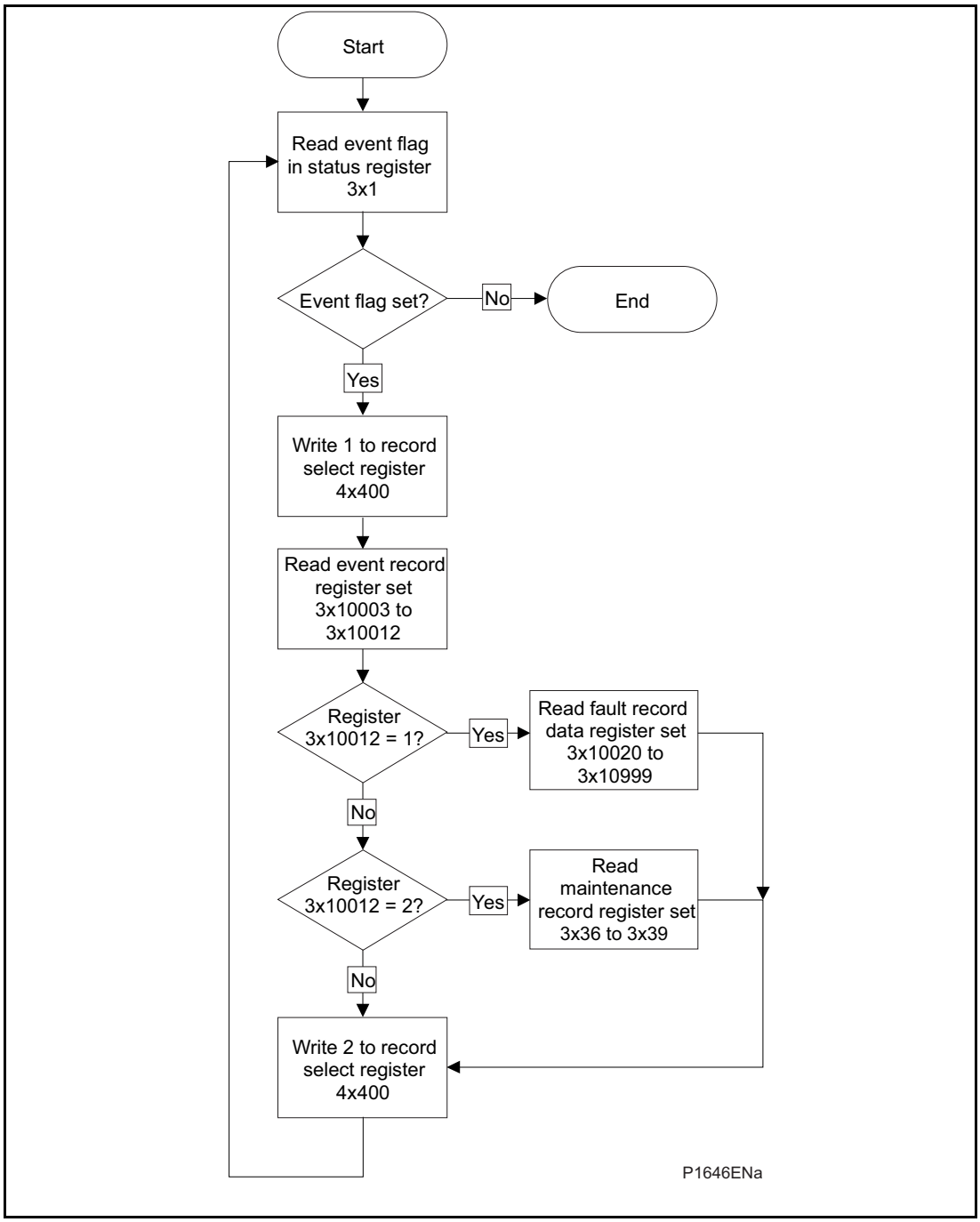

Figure 6: Automatic event extraction procedure

4.11.3 Record data

The location and format of the registers used to access the record data is the same whether they have been selected using manual or automatic extraction mechanisms detailed above.

Description	Register	Length (registers)	Comments
Time Stamp	3x10003	4	See G12 data type the Relay Menu Database, P24x/EN MD.
Event Type	3x10007	1	Indicates the type of the event record. See G13 data type in the Relay Menu Database, *P24x/EN MD* (additionally, a value of 255 indicates that the end of the event log has been reached).
Event Value	3x10008	2	Contains the associated status register value, as a string of binary flags, for relay-contact, opto-input, alarm, and protection events. Otherwise, it will have a value of zero. When a status value is supplied, the value represents the recorded value of the event types associated register pair, as indicated by the Event Origin value. [6]
Event Origin	3x10010	1	The Event Original value indicates the MODBUS Register pair where the change occurred. [7] Possible values are: 30011: Alarm Status 1 event 30013: Alarm Status 2 event 30015: Alarm Status 3 event 30723: Relay contact event (2 registers: DDB 0-31 status) 30727: Status input event (2 registers: DDB 64-95 status) 40537 to 40548: Protection events (Indicates the 32-bit DDB status word that was the origin of the event) For General events, Fault events, and Maintenance events a value of zero will be returned.
Event Index	3x10011	1	The Event Index value is used to distinguish between events with the same Event Type and Event Origin. The registers value depends on the type of the event: For protection events, the value is the ID of the DDB that caused the event. For alarm events, the value is the ID of the alarm that caused the event. In both cases, the value includes the direction of the state transition in the most significant bit. This direction bit is 1 for a 0-1 (low to high) change, and 0 for a 1-0 (high to low) change. For all other types of events, it will have a value of zero.

SC

[6] The protection-event status information is the value of the DDB status word that contains the protection DDB that caused the event.

[7] Subtracting 3000 from the Event Origin value results in the MODBUS 3x memory-page register ID, subtracting one from this results in the MODBUS register address - see section 4.5.1.2. The resultant register address can be used in a function code 4 MODBUS query.

Description	Register	Length (registers)	Comments
Additional Data Present	3x10012	1	Indicates whether the record has additional data. 0: Indicates that there is no additional data. 1: Indicates that fault record data can be read from 3x10020 to 3x10999. [8] **Note:** In order to obtain fault record data, event record must be extracted. 2: Indicates that maintenance record data can be read from registers 3x36 to 3x39.

Table 7: Event record extraction registers

If a fault record or maintenance record is directly selected using the manual mechanism, then the data can be read from the fault or maintenance data register ranges specified above. The event record data in registers 3x10003 to 3x10012 will not be valid.

See the Relay Menu Database, *P24x/EN MD* for the record values for each event.

The general procedure for decoding an event record is to use the value of the "Event Type" field combined with the value of the "Event Index" field to uniquely identify the event. The exceptions to this are event types 4, 5, 7, 8, & 9.

Event types 4 "Relay Contact Output Events" and 5 "Opto-Isolated Status Input Events" only provide the value of the input or output status register (as indicated by the Event Origin value) at the time the event occurred. If event transition information for each input or output is required then this must be deduced by comparing the event value with the previous event value (for identically typed events records).

Event type 7 "General Event" events are solely identified by their "Event Value".

Event types 8 "Fault Record" and 9 "Maintenance Record" require additional registers to be read when the associated additional data is available. [9] The Fault record registers in the range 3x10020 to 3x10999 (the exact number of registers depends on the individual product) are clearly documented in the 3x register-map in the Relay Menu Database, *P24x/EN MD*. The two additional 32-bit maintenance record register-pairs consist of a maintenance record type (register pair 3x36/7) and a type-specific error code (register pair 3x38/9). Table 8: lists the different types of maintenance record available from the product.

Maintenance record	Front panel text	Record type 3x00036
Power on test errors (non-fatal)		
Watchdog 1 failure (fast)	Fast W'Dog Error	0
Battery fail	Battery Failure	1
Battery-backed RAM failure	BBRAM Failure	2
Field voltage failure	Field Volt Fail	3
Ribbon bus check failure	Bus Reset Error	4
Watchdog 2 failure (slow)	Slow W'Dog Error	5
Continuous self-test errors		
SRAM bus failure	SRAM Failure Bus	6
SRAM cell failure	SRAM Failure Blk.	7
Flash EPROM checksum failure	FLASH Failure	8
Program code verify failure	Code Verify Fail	9
Battery-backed RAM failure	BBRAM Failure	10
Battery fail	Battery Failure	11

SC

[8] The exact number of fault record registers depends on the individual product - see Relay Menu Database, *P24x/EN MD*.

[9] As noted at the beginning of section 4.11, it should not be assumed that the additional data will be available for fault and maintenance record events.

Maintenance record	Front panel text	Record type 3x00036
Field Voltage failure	Field Volt Fail	12
EEPROM failure	EEPROM Failure	13
Fatal software exception	Software Failure	14
Incorrect hardware configuration	H/W Verify Fail	15
Software exception (typically non-fatal)	Non Standard	16
Analog module failure	Ana. Sample Fail	17
Ethernet card error	NIC Soft Error	18

Table 8: Maintenance record types

4.11.4 Event record deletion

It is possible to independently delete ("clear") the stored event, fault, and maintenance record queues. This is accomplished by writing a value of 1, 2, or 3 to register 4x401 (G6 data type), respectively.

This register also provides an option to reset the product's front panel indications, which has the same effect as pressing the front panel "Clear" key when viewing alarm indications using the front panel user interface. This is accomplished by writing a value of 4 to register 4x401.

See also section 4.12.4 for details about deleting disturbance records.

4.11.5 Event record support

A set of 3x registers for the presentation of the event and fault record data are described in this section. .

Table 9: describes the event record registers used in the event record discussions in the prior sub-sections.

The fault record data between registers exist between 3x113 and 3x199, and 3x490 and 3x499.

Description	Obsolete register	Length (registers)
Number of stored event records	3x00100	1
Number of stored fault records	3x00101	1
Number of stored maintenance records	3x00102	1
Time Stamp	3x00103	4
Event Type	3x00107	1
Event Value	3x00108	2
Event Origin	3x00110	1
Event Index	3x00111	1
Additional Data Present	3x00112	1

Table 9: Event record 3x registers

SC

4.12 Disturbance record extraction

The product provides facilities for both manual and automatic extraction of disturbance records. The two methods differ only in the mechanism for selecting a disturbance record, the method for extracting the data and the format of the data are identical.

Note: The record format and extraction procedures have changed for version "20" of the product software and are not compatible with prior versions.

Records extracted are presented in IEEE COMTRADE format. This involves extracting two files: an ASCII text configuration file, and a binary data file.

Each file is extracted by repeatedly reading a data-page until all of the file's data has been transferred. The data-page is made up of 127 registers; providing a maximum of 254 bytes per register block request.

4.12.1 Interface registers

The following set of registers is presented to the master station to support the extraction of uncompressed disturbance records:

Register	Name	Description
3x00001	Status register	Provides the status of the product as bit flags: b0 - Out of service b1 - Minor self test failure b2 - Event b3 - Time synchronization b4 - Disturbance b5 - Fault b6 - Trip b7 - Alarm b8 to b15 - Unused A '1' in bit "b4" indicates the presence of one or more disturbance records.
3x00800	Number of stored disturbances	Indicates the total number of disturbance records currently stored in the product, both extracted and unextracted.
3x00801	Unique identifier of the oldest disturbance record	Indicates the unique identifier value for the oldest disturbance record stored in the product. This is an integer value used in conjunction with the 'Number of stored disturbances' value to calculate a value for manually selecting records.
4x00250	Manual disturbance record selection register	This register is used to manually select disturbance records. The values written to this cell are an offset of the unique identifier value for the oldest record. The offset value, which ranges from 0 to the No of stored disturbances - 1, is added to the identifier of the oldest record to generate the identifier of the required record.
4x00400	Record selection command register	This register is used during the extraction process and has a number of commands. These are: b0 - Select next event b1 - Accept event b2 - Select next disturbance record b3 - Accept disturbance record b4 - Select next page of disturbance data b5 - Select data file
3x00930 to 3x00933	Record time stamp	These registers return the timestamp of the disturbance record.
3x00802	Number of registers in data page	This register informs the master station of the number of registers in the data page that are populated.
3x00803 to 3x00929	Data page registers	These 127 registers are used to transfer data from the product to the master station.
3x00934	Disturbance record status register	The disturbance record status register is used during the extraction process to indicate to the master station when data is ready for extraction. See next table.
4x00251	Data file format selection	This is used to select the required data file format. This is reserved for future use.

Table 10: Disturbance record extraction registers

The Disturbance Record status register will report one of the following values:

State		Description
Idle		This will be the state reported when no record is selected; such as after power on or after a record has been marked as extracted.
Busy		The product is currently processing data.
Page ready		The data page has been populated and the master can now safely read the data.
Configuration complete		All of the configuration data has been read without error.
Record complete	4	All of the disturbance data has been extracted.
Disturbance overwritten	5	An error occurred during the extraction process where the disturbance being extracted was overwritten by a new record.
No unextracted disturbances	6	An attempt was made by the master station to automatically select the next oldest unextracted disturbance when all records have been extracted.
Not a valid disturbance	7	An attempt was made by the master station to manually select a record that did not exist in the product.
Command out of sequence	8	The master station issued a command to the product that was not expected during the extraction process.

Table 11: Disturbance record status register (3x934) values

4.12.2 Extraction procedure

The following procedure must be used to extract disturbance records from the product. The procedure is split into four sections:

1. Selection of a disturbance - either manually or automatically
2. Extraction of the configuration file
3. Extraction of the data file
4. Accepting the extracted record (automatic extraction only)

4.12.2.1 Manual extraction procedure

The procedure used to extract a disturbance manually is shown in Figure 7. The manual method of extraction does not allow for the acceptance of disturbance records.

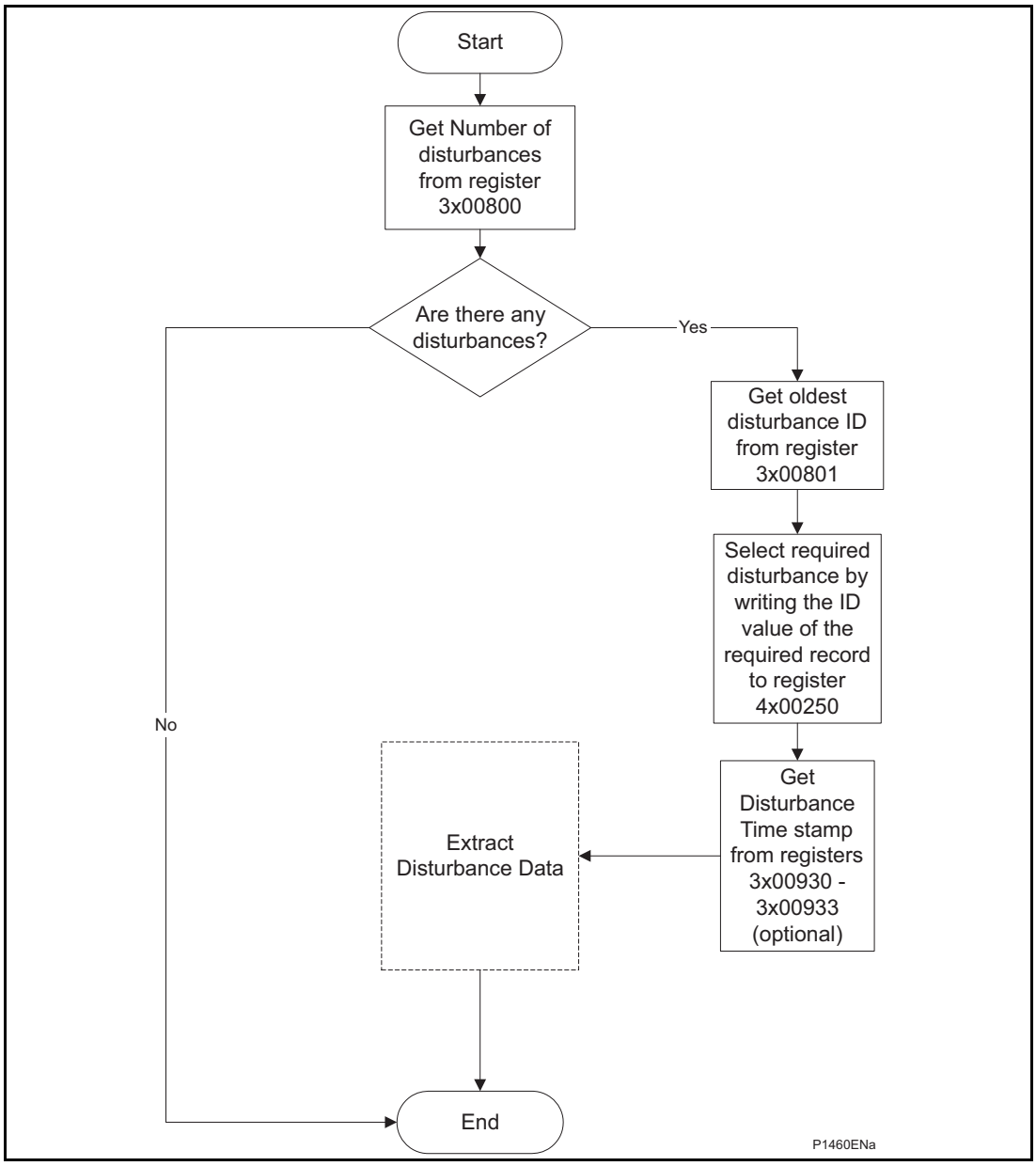

Figure 7: Manual selection of a disturbance record

4.12.2.2 Automatic extraction procedure - option 1

There are two methods that can be used for automatically extracting disturbances. The procedure for the first method is shown Figure 8. This also shows the acceptance of the disturbance record once the extraction is complete.

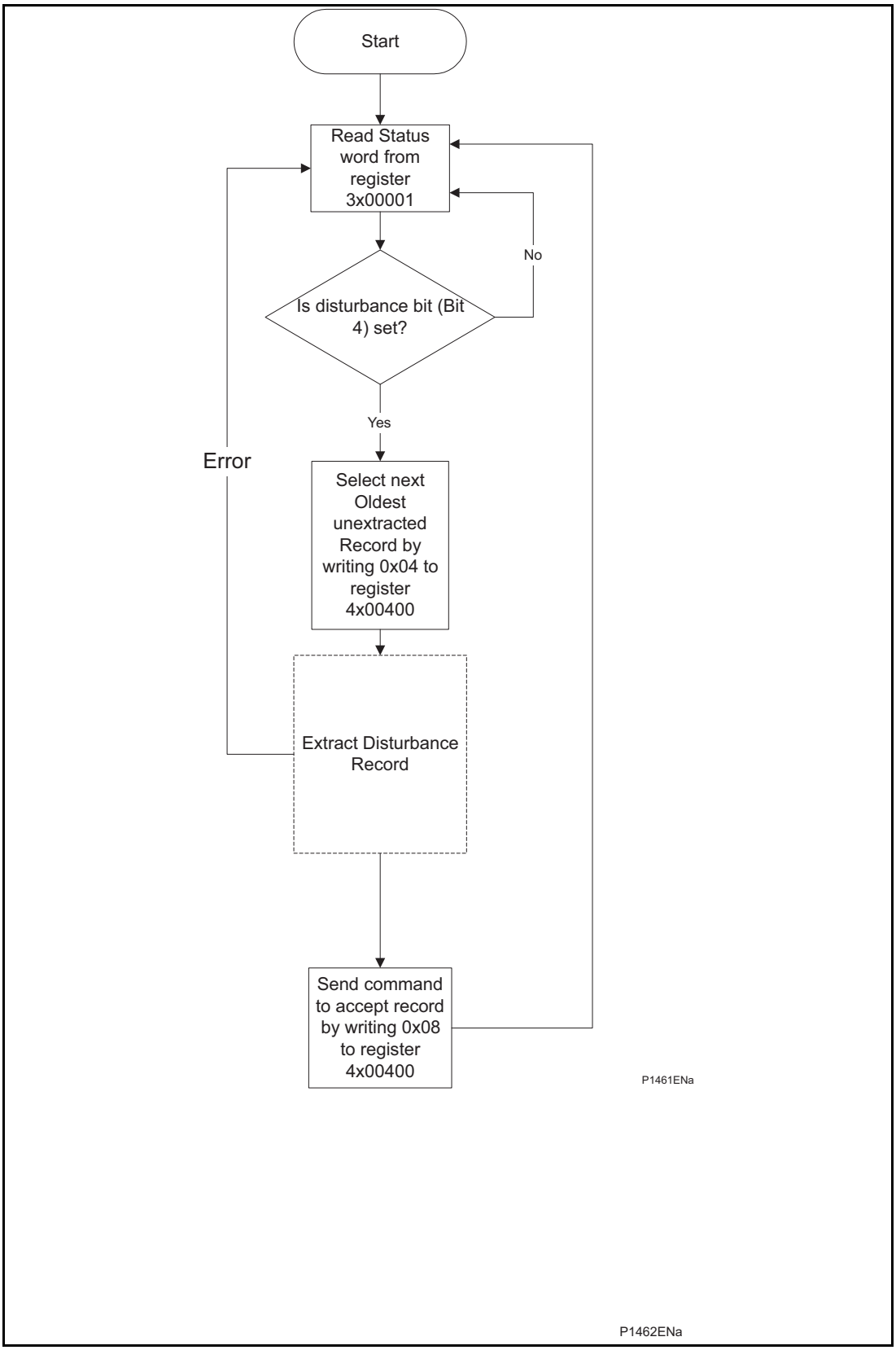

Figure 8: Automatic selection of a disturbance - option 1

4.12.2.3 Automatic extraction procedure - option 2

The second method that can be used for automatic extraction is shown in Figure 9. This also shows the acceptance of the disturbance record once the extraction is complete.

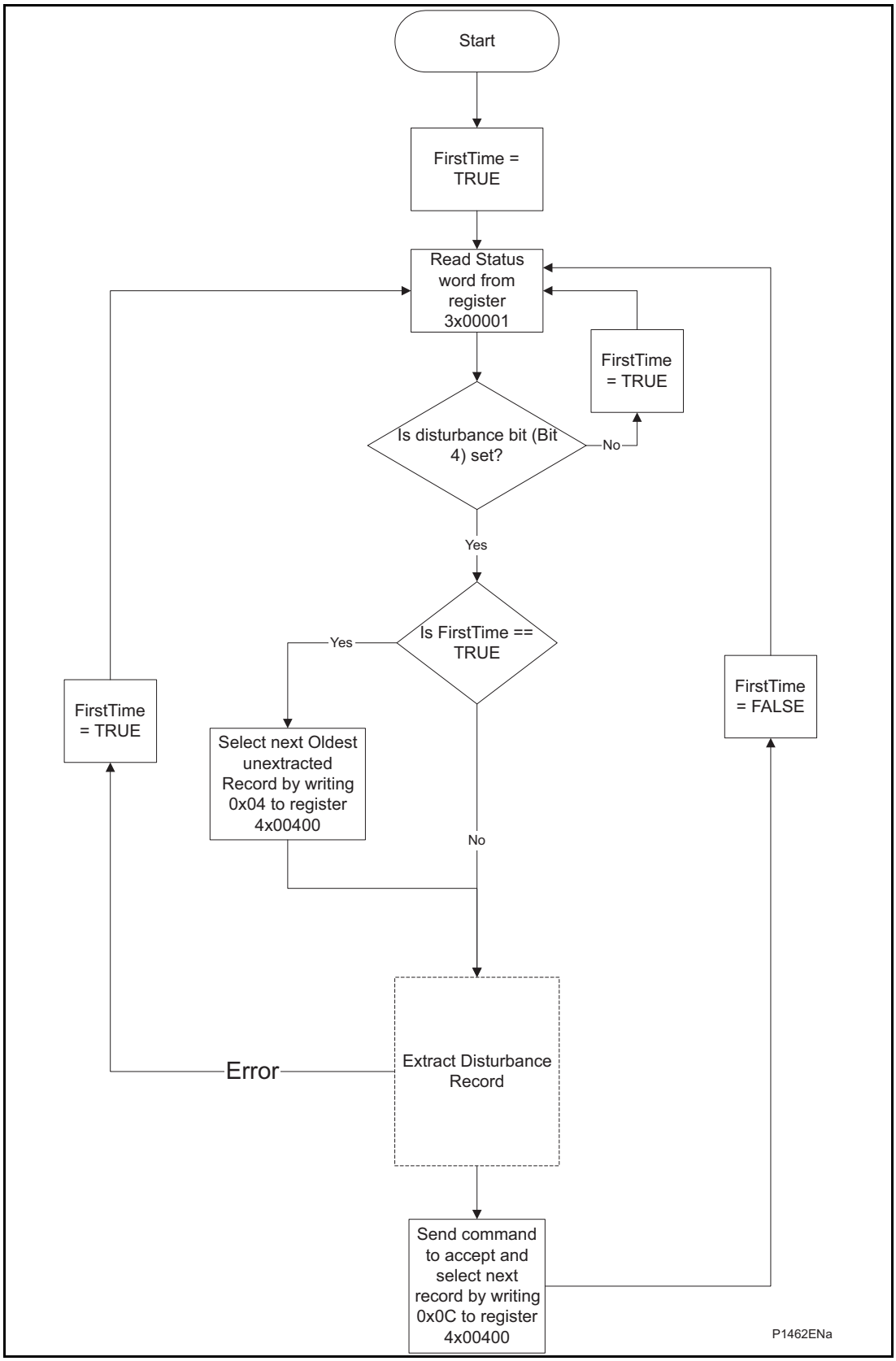

Figure 9: Automatic selection of a disturbance - option 2

4.12.2.4 Extracting the disturbance data

Extraction of a selected disturbance record is a two-stage process that involves reading the configuration file first followed by the data file.

Figure 10 shows how the configuration file is read:

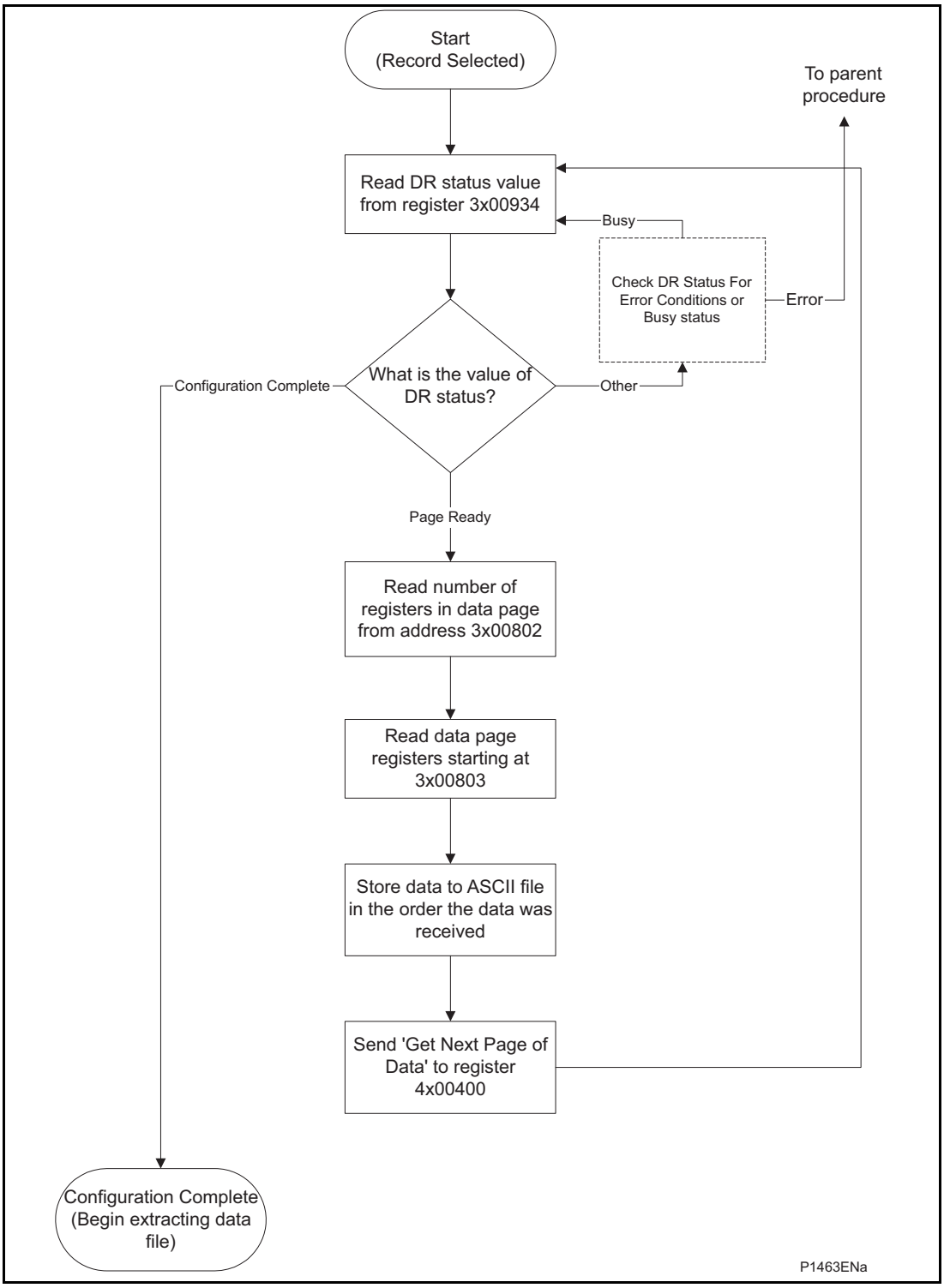

Figure 10: Extracting the COMTRADE configuration file

Figure 11 shows how the data file is extracted:

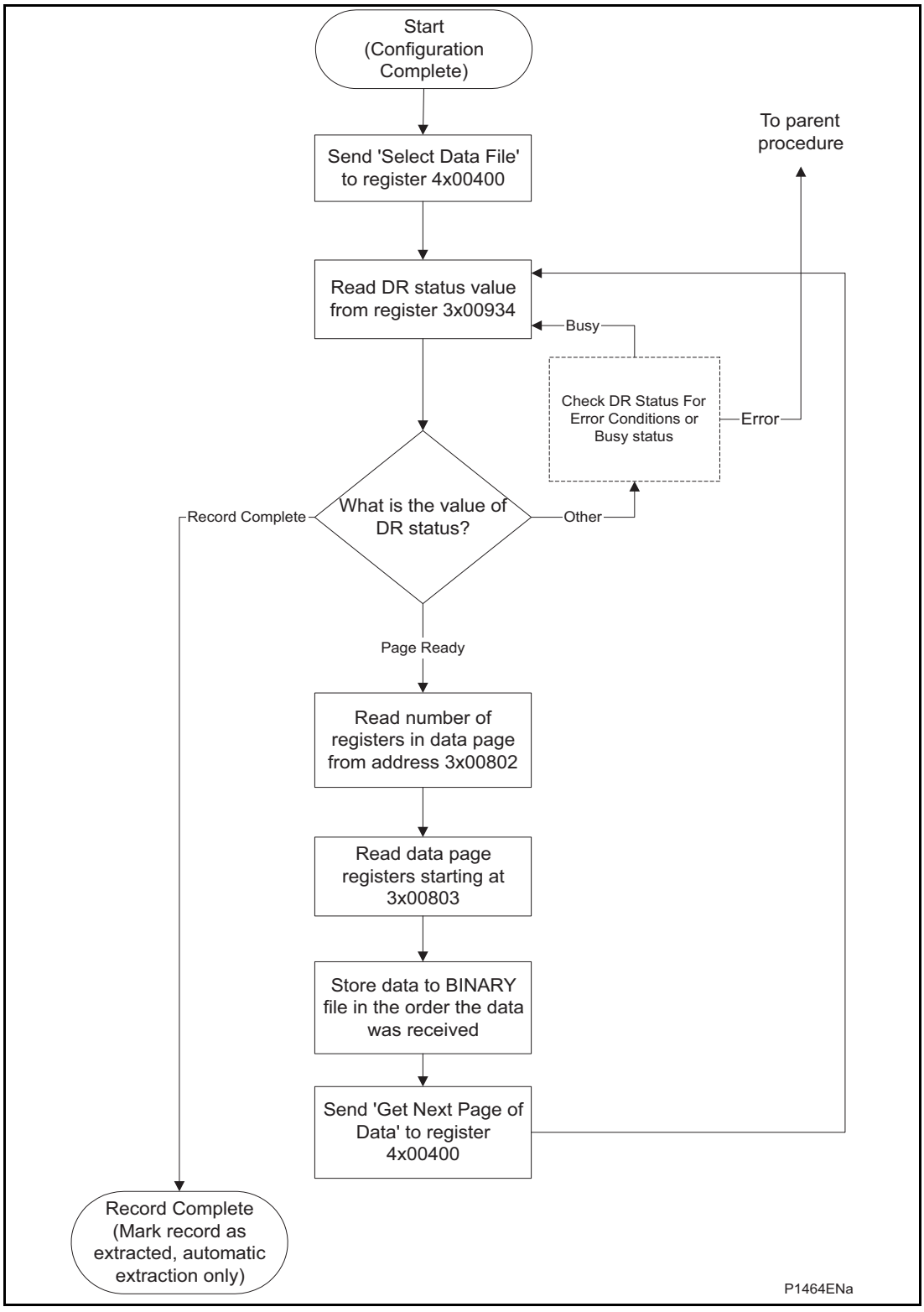

Figure 11: Extracting the COMTRADE binary data file

During the extraction of a COMTRADE file, an error may occur that will be reported in the disturbance record status register, 3x934. This can be caused by the product overwriting the record being extracted or by the master issuing a command that is not within the bounds of the extraction procedure.

4.12.3 Storage of extracted data

The extracted data needs to be written to two separate files. The first is the configuration file, which is in ASCII text format, and the second is the data file, which is in a binary format.

4.12.3.1 Storing the configuration file

As the configuration data is extracted from the product, it should be stored to an ASCII text file with a '.cfg' file extension. Each register in the page is a G1 format 16-bit unsigned integer that is transmitted in big-endian byte order. The master must write the configuration file page-data to the file in ascending register order with each register's high order byte written before its low order byte, until all the pages have been processed.

4.12.3.2 Storing the binary data file

As the binary data is extracted from the product, it should be stored to a binary file with the same name as the configuration file, but with a '.dat' file extension instead of the '.cfg' extension. Each register in the page is a G1-format 16-bit unsigned integer that is transmitted in big-endian byte order. The master must write the page data to a file in ascending register order with each register's high order byte written before its low order byte until all the pages have been processed.

4.12.4 Disturbance record deletion

All of the disturbance records stored in the product can be deleted ("cleared") by writing 5 to the record control register 4x401 (G6 data type). See also section 4.11.4 for details about event record deletion.

4.13 Setting changes

The product settings can be split into two categories:

- Control and support settings
- Disturbance record settings and protection setting groups

Changes to settings within the control and support area are executed immediately. Changes to the protection setting groups or the disturbance recorder settings are stored in a temporary 'scratchpad' area and must be confirmed before they are implemented. All the product settings are 4x page registers (see Relay Menu Database, *P24x/EN MD*). The following points should be noted when changing settings:

- Settings implemented using multiple registers must be written to using a multi-register write operation. The product does not support write access to sub-parts of multi-register data types.
- The first address for a multi-register write must be a valid address. If there are unmapped addresses within the range being written to then the data associated with these addresses will be discarded.
- If a write operation is performed with values that are out of range then an "illegal data" response code will be produced. Valid setting values within the same write operation will be executed.
- If a write operation is performed attempting to change registers that require a higher level of password access than is currently enabled then all setting changes in the write operation will be discarded.

SC

4.13.1 Password protection

The product's settings can be subject to Password protection. The level of password protection required to change a setting is indicated in the 4x register-map table in the Relay Menu Database, *P24x/EN MD*. Level 2 is the highest level of password access, level 0 indicates that no password is required.

The following registers are available to control Password protection:

- 4x00001 & 4x00002 Password Entry
- 4x00022 Default Password Level
- 4x00023 & 4x00024 Setting to Change Password Level 1
- 4x00025 & 4x00026 Setting to Change Password Level 2

- 3x00010 Current Access Level (read only)

4.13.2 Control and support settings

Control and support settings are committed immediately when a value is written to such a register. The MODBUS registers in this category are:

- 4x00000-4x00599
- 4x00700-4x00999
- 4x02049 to 4x02052
- 4x10000-4x10999

4.13.2.1 Time synchronization

The value of the product's real time clock can be set by writing the desired time (see section 4.16) to registers 4x02049 through 4x02052. These registers are standard to Schneider Electric MiCOM products, which facilitates the use of broadcast of a time synchronization packet -being a block write to the time setting registers sent to slave address zero.

When the product's time has been set via these registers the Time Synchronized flag in the MODBUS Status Register (3x1: type G26) will be set. The product automatically clears this flag if more than five minutes has elapsed since these registers were last written to.

A "Time synchronization" event will be logged if the new time value is more than two seconds different from the current value.

4.13.3 Disturbance recorder configuration settings

Disturbance recorder configuration-settings are written to a scratchpad memory area. A confirmation procedure is required in order to commit the contents of the scratchpad to the disturbance recorder's set-up, which ensures that the recorders configuration is consistent at all times. The contents of the scratchpad memory can be discarded with the abort procedure. The scratchpad confirmation and abort procedures are described in section 4.13.5.

The disturbance recorder configuration registers are in the range:

- 4x00600-4x00699

4.13.4 Protection settings

Protection configuration-settings are written to a scratchpad memory area. A confirmation procedure is required in order to commit the contents of the scratchpad to the product's protection functions, which ensures that their configuration is consistent at all times. The contents of the scratchpad memory can be discarded with the abort procedure. The scratchpad confirmation and abort procedures are described in section 4.13.5.

The product supports four groups of protection settings. One protection-group is active and the other three are either dormant or disabled. The active protection-group can be selected by writing to register 4x00404. An illegal data response will be returned if an attempt is made to set the active group to one that has been disabled.

The MODBUS registers for each of the four groups are repeated within the following ranges:

- Group 1 4x01000-4x02999, 10 4x11000-4x12999
- Group 2 4x03000-4x04999, 4x13000-4x14999
- Group 3 4x05000-4x06999, 4x15000-4x16999
- Group 4 4x07000-4x08999, 4x17000-4x18999

SC

10 Registers 4x02049 to 4x02052 are not part of protection setting group #1 and therefore do not repeat in any of the other protection setting groups. These registers are for time synchronization purposes and are standard for most Schneider Electric products. See section 4.13.2.1.

4.13.5 Scratchpad management

Register 4x00405 can be used to either confirm or abort the setting changes within the scratchpad area. In addition to the basic editing of the protection setting groups, the following functions are provided:

- Default values can be restored to a setting group or to all of the product settings by writing to register 4x00402.
- It is possible to copy the contents of one setting group to another by writing the source group to register 4x00406 and the target group to 4x00407.
- The setting changes performed by either of the two operations defined above are made to the scratchpad area. These changes must be confirmed by writing to register 4x00405.

4.14 Register data types

The product maps one or more MODBUS registers to data-typed information contained within an internal database. These data-types are referred to as G-Types since they have a 'G' prefixed identifier. The Relay Menu Database, P24x/EN MD gives a complete definition of the all of the G-Types used in the product.

In general, the data types are transmitted in high byte to low byte order, which is some times called "Big Endian format". This may require the MODBUS master to reorder the received bytes into a format compliant with its byte-order and register order (for multi-register

G-Types) conventions. Most MODBUS masters provide byte-swap and register-swap device (or data point) configuration to cope with the plethora of implementations.

The product's data-types are atomic in nature. This means that the multi-register types cannot be read (or written) on an individual register basis. All of the registers for a

multi-register data-typed item must be read (or written) with a single block read (or write) command.

The following subsections provide some additional notes for a few of the more complex

G-Types.

4.15 Numeric setting (data types G2 & G35)

Numeric settings are integer representations of real (non-integer) values. The register value is the number of setting increments (or steps) that the real value is away from the settings real minimum value. This is expressed by the following formula:

$S_{real} = S_{min.} + (S_{inc.} \times S_{numeric})$

Where:

- S_{real} - Setting real value
- $S_{min.}$ - Setting real minimum value
- $S_{inc.}$ - Setting real increment (step) value
- $S_{numeric}$ - Setting numeric (register) value

For example, a setting with a real value setting range of 0.01 to 10 in steps of 0.01 would have the following numeric setting values:

Real value (Sreal)	Numeric value (Snumeric)
0.01	0
0.02	1
1.00	99

Table 12: Example of numeric settings

The G2 numeric data type uses 1 register as an unsigned 16-bit integer, whereas the G35 numeric data type uses 2 registers as an unsigned 32-bit integer. The G2 data type therefore provides a maximum setting range of 216 x S_{inc}. Similarly the G35 data type provides a maximum setting range of 232 x S_{inc}.

4.16 Date and time format (data type G12)

The date-time data type G12 allows real date and time information to be conveyed down to a resolution of 1ms. The data-type is used for record time-stamps and for

time synchronization (see section 4.13.2.1).

The structure of the data type is shown in Table 13 and is compliant with the IEC 60870-5-4 “Binary Time 2a” format.

Byte	Bit position							
	7	6	5	4	3	2	1	0
1	m7	m6	m5	m4	m3	m2	m1	m0
2	m15	m14	m13	m12	m11	m10	m9	m8
3	IV	R	I5	I4	I3	I2	I1	I0
4	SU	R	R	H4	H3	H2	H1	H0
5	W2	W1	W0	D4	D3	D2	D1	D0
6	R	R	R	R	M3	M2	M1	M0
7	R	Y6	Y5	Y4	Y3	Y2	Y1	Y0

Table 13: G12 date & time data type structure

Where:

m = 0…59,999ms

I = 0…59 minutes

H = 0…23 Hours

W = 1…7 Day of week; Monday to Sunday, 0 for not calculated

D = 1…31 Day of Month

M = 1…12 Month of year; January to December

Y = 0…99 Years (year of century)

R = Reserved bit = 0

SU = Summertime: 0=standard time, 1=summer time

IV = Invalid value: 0=valid, 1=invalid

range = 0 ms…99 years

The seven bytes of the structure are packed into four 16-bit registers. Two packing formats are provided: standard and reverse. The prevailing format is selected by the G238 setting in the “Date and Time” menu column or by register 4x306.[11]

The standard packing format is the default and complies with the IEC 60870-5-4 requirement that byte 1 is transmitted first, followed by byte 2 through to byte 7, followed by a null (zero) byte to make eight bytes in total. Since register data is usually transmitted in big-endian format (high order byte followed by low order byte), byte 1 will be in the high-order byte position followed by byte 2 in the low-order position for the first register. The last register will contain just byte 7 in the high order position and the low order byte will have a value of zero.

The reverse packing format is the exact byte transmission order reverse of the standard format. That is, the null (zero) byte is sent as the high-order byte of the first register and byte 7 as the register’s low-order byte. The second register’s high-order byte contains byte 6 and byte 5 in its low order byte.

Both packing formats are fully documented in the Relay Menu Database, P24x/EN MD for the G12 type.

11 This menu cell does not exist in P240 software revisions prior to C1.0 (40). Versions prior to this use just the standard time format.

The principal application of the reverse format is for date-time packet format consistency when a mixture of MiCOM Px20, Px30, and Px40 series products are being used. This is especially true when there is a requirement for broadcast time synchronization with a mixture of such MiCOM products.

The data type provides only the year of century value; the century must be deduced. Simplistically the century could be imposed as 20 for applications not dealing with dates stored in this format from the previous (20th) century. Alternatively, the century can be calculated as the one that will produce the nearest time value to the current date. For example: 30-12-99 is 30-12-1999 when received in 1999 & 2000, but is 30-12-2099 when received in 2050. This technique allows 2 digit years to be accurately converted to 4 digits in a ±50 year window around the current datum.

The invalid bit has two applications:

1. It can indicate that the date-time information is considered inaccurate, but is the best information available.
2. Date-time information is not available.

The summertime bit is used to indicate that summertime (day light saving) is being used and, more importantly, to resolve the alias and time discontinuity which occurs when summertime starts and ends. This is important for the correct time correlation of time stamped records.

Note: The value of the summertime bit does not affect the time displayed by the product).

The day of the week field is optional and if not calculated will be set to zero.

The concept of time zone is not catered for by this data type and hence by the product. It is up to the end user to determine the time zone utilized by the product. Normal practice is to use UTC (universal co-ordinated time), which avoids the complications with day light saving time-stamp correlation's.

4.17 Power and energy measurement data formats (G29 & G125)

The power and energy measurements are available in data format G29 integer format (software version A3.1c and earlier) and the G125 IEEE754 floating point format (software A3.1d and later). The G125 format is preferred over the older G29 format.

4.17.1 Data type G29

Data type G29 consists of three registers. The first register is the per unit power or energy measurement and is of type G28, which is a signed 16-bit quantity. The second and third registers contain a multiplier to convert the per unit value to a real value.

The multiplier is of type G27, which is an unsigned 32-bit quantity. Thus, the overall value conveyed by the G29 data type must be calculated as G29=G28×G27.

The product calculates the G28 per unit power or energy value as G28=((measured secondary quantity) / (CT secondary) × (110V / (VT secondary)). Since data type G28 is a signed 16-bit integer, its dynamic range is constrained to ±32768. This limitation should be borne in mind for the energy measurements, as the G29 value will saturate a long time before the equivalent G125 does.

The associated G27 multiplier is calculated as G27=(CT primary) × (VT primary / 110 V) when primary value measurements are selected, and as G27=(CT secondary) × (VT secondary / 110 V) when secondary value measurements are selected.

Note: The G29 values must be read in whole multiples of three registers. It is not possible to read the G28 and G27 parts with separate read commands.

Example:

For A-Phase Power (Watts) (registers 3x00300 - 3x00302) for a 110 V nominal, In = 1 A, VT ratio = 110 V:110 V and CT ratio = 1 A:1 A.

Applying A-phase 1A @ 63.51V

A-phase Watts = ((63.51 V × 1 A) / In=1 A) × (110/Vn=110 V) = 63.51 Watts

The G28 part of the value is the truncated per unit quantity, which will be equal to 64 (40h).

The multiplier is derived from the VT and CT ratios set in the product, with the equation ((CT Primary) × (VT Primary) / 110 V)). Therefore, the G27 part of the value will equal 1. Hence the overall value of the G29 register set is 64×1 = 64 W.

The registers would contain:

3x00300 - 0040h

3x00301 - 0000h

3x00302 - 0001h

Using the previous example with a VT ratio = 110,000 V:110 V and CT ratio = 10,000 A : 1 A the G27 multiplier would be 10,000 A×110,000V/110 = 10,000,000. The overall value of the G29 register set is 64 × 10,000,000 = 640 MW.

Note: There is an actual error of 49MW in this calculation due to loss of resolution.

The registers would contain:

3x00300 - 0040h

3x00301 - 0098h

3x00302 - 9680h

4.17.2 Data type G125

Data type G125 is a short float IEEE754 floating point format, which occupies 32-bits in two consecutive registers. The most significant 16-bits of the format are in the first (low order) register and the least significant 16-bits in the second register.

The value of the G125 measurement is as accurate as the product's ability to resolve the measurement after it has applied the secondary or primary scaling factors as required. It does not suffer from the truncation errors or dynamic range limitations associated with the G29 data format.

5 IEC 60870-5-103 INTERFACE

The IEC 60870-5-103 interface is a master/slave interface with the relay as the slave device. The relay conforms to compatibility level 2; compatibility level 3 is not supported.

The following IEC 60870-5-103 facilities are supported by this interface:

- Initialization (Reset)
- Time Synchronization
- Event Record Extraction
- General Interrogation
- Cyclic Measurements
- General Commands
- Disturbance Record Extraction
- Private Codes

5.1 Physical connection and link layer

Two connection options are available for IEC 60870-5-103, either the rear EIA(RS)485 port or an optional rear fiber optic port. Should the fiber optic port be fitted the selection of the active port can be made via the front panel menu or the front Courier port, however the selection will only be effective following the next relay power up.

For either of the two modes of connection it is possible to select both the relay address and baud rate using the front panel menu/front Courier. Following a change to either of these two settings a reset command is required to re-establish communications, see reset command description below.

5.2 Initialization

Whenever the relay has been powered up, or if the communication parameters have been changed a reset command is required to initialize the communications. The relay will respond to either of the two reset commands (Reset CU or Reset FCB), the difference being that the Reset CU will clear any unsent messages in the relays transmit buffer.

The relay will respond to the reset command with an identification message ASDU 5, the Cause of Transmission COT of this response will be either Reset CU or Reset FCB depending on the nature of the reset command. The content of ASDU 5 is described in the IEC 60870-5-103 section of the Relay Menu Database, *P24x/EN MD*.

In addition to the above identification message, if the relay has been powered up it will also produce a power up event.

5.3 Time synchronization

The relay time and date can be set using the time synchronization feature of the

IEC 60870-5-103 protocol. The relay will correct for the transmission delay as specified in IEC 60870-5-103. If the time synchronization message is sent as a send/confirm message then the relay will respond with a confirm. Whether the time-synchronization message is sent as a send confirm or a broadcast (send/no reply) message, a time synchronization Class 1 event will be generated/produced.

If the relay clock is being synchronized using the IRIG-B input then it will not be possible to set the relay time using the IEC 60870-5-103 interface. An attempt to set the time via the interface will cause the relay to create an event with the current date and time taken from the IRIG-B synchronized internal clock.

5.4 Spontaneous events

Events are categorized using the following information:

- Function Type
- Information Number

The IEC 60870-5-103 profile in the Relay Menu Database, *P24x/EN MD*, contains a complete listing of all events produced by the relay.

5.5 General interrogation

The GI request can be used to read the status of the relay, the function numbers, and information numbers that will be returned during the GI cycle are indicated in the

IEC 60870-5-103 profile in the Relay Menu Database, *P24x/EN MD*.

5.6 Cyclic measurements

The relay will produce measured values using ASDU 9 on a cyclical basis; this can be read from the relay using a Class 2 poll (note ADSU 3 is not used). The rate at which the relay produces new measured values can be controlled using the Measurement Period setting. This setting can be edited from the front panel menu/front Courier port and is active immediately following a change.

Note: The measurands transmitted by the relay are sent as a proportion of 2.4 times the rated value of the analog value.

5.7 Commands

A list of the supported commands is contained in the Relay Menu Database, *P24x/EN MD*. The relay will respond to other commands with an ASDU 1, with a Cause of Transmission (COT) indicating 'negative acknowledgement'.

5.8 Test mode

It is possible using either the front panel menu or the front Courier port to disable the relay output contacts to allow secondary injection testing to be performed. This is interpreted as 'test mode' by the IEC 60870-5-103 standard. An event will be produced to indicate both entry to and exit from test mode. Spontaneous events and cyclic measured data transmitted whilst the relay is in test mode will have a COT of 'test mode'.

5.9 Disturbance records

The disturbance records are stored in uncompressed format and can be extracted using the standard mechanisms described in IEC 60870-5-103.

Note: IEC 60870-5-103 only supports up to 8 records.

5.10 Blocking of monitor direction

The relay supports a facility to block messages in the Monitor direction and also in the Command direction. Messages can be blocked in the Monitor and Command directions using the menu commands, Communications - CS103 Blocking - Disabled/Monitor Blocking/Command Blocking or DDB signals Monitor Blocked and Command Blocked.

6 IEC 61850 ETHERNET INTERFACE

6.1 Introduction

IEC 61850 is the international standard for Ethernet-based communication in substations. It enables integration of all protection, control, measurement and monitoring functions within a substation, and additionally provides the means for interlocking and inter-tripping. It combines the convenience of Ethernet with the security which is essential in substations today.

The MiCOM protection relays can integrate with the PACiS substation control systems, to complete Schneider Electric Automation's offer of a full IEC 61850 solution for the substation. The majority of MiCOM Px3x and Px4x relay types can be supplied with Ethernet, in addition to traditional serial protocols. Relays which have already been delivered with UCA2.0 on Ethernet can be easily upgraded to IEC 61850.

6.2 What is IEC 61850?

IEC 61850 is an international standard, comprising 14 parts, which defines a communication architecture for substations.

- The standard defines and offers much more than just a protocol. It provides:
- Standardized models for IEDs and other equipment within the substation
- Standardized communication services (the methods used to access and exchange data)
- Standardized formats for configuration files
- Peer-to-peer (e.g. relay to relay) communication

The standard includes mapping of data onto Ethernet. Using Ethernet in the substation offers many advantages, most significantly including:

- High-speed data rates (currently 100 Mbits/s, rather than 10’s of kbits/s or less used by most serial protocols)
- Multiple masters (called “clients”)
- Ethernet is an open standard in every-day use

Schneider Electric has been involved in the Working Groups which formed the standard, building on experience gained with UCA2.0, the predecessor of IEC 61850.

6.2.1 Interoperability

A major benefit of IEC 61850 is interoperability. IEC 61850 standardizes the data model of substation IEDs. This responds to the utilities’ desire of having easier integration for different vendors’ products, i.e. interoperability. It means that data is accessed in the same manner in different IEDs from either the same or different IED vendors, even though, for example, the protection algorithms of different vendors’ relay types remain different.

When a device is described as IEC 61850-compliant, this does not mean that it is interchangeable, but does mean that it is interoperable. You cannot simply replace one product with another, however the terminology is pre-defined and anyone with prior knowledge of IEC 61850 should be able very quickly integrate a new device without the need for mapping of all of the new data. IEC 61850 will inevitably bring improved substation communications and interoperability, at a lower cost to the end user.

6.2.2 The data model

To ease understanding, the data model of any IEC 61850 IED can be viewed as a hierarchy of information. The categories and naming of this information is standardized in the IEC 61850 specification.

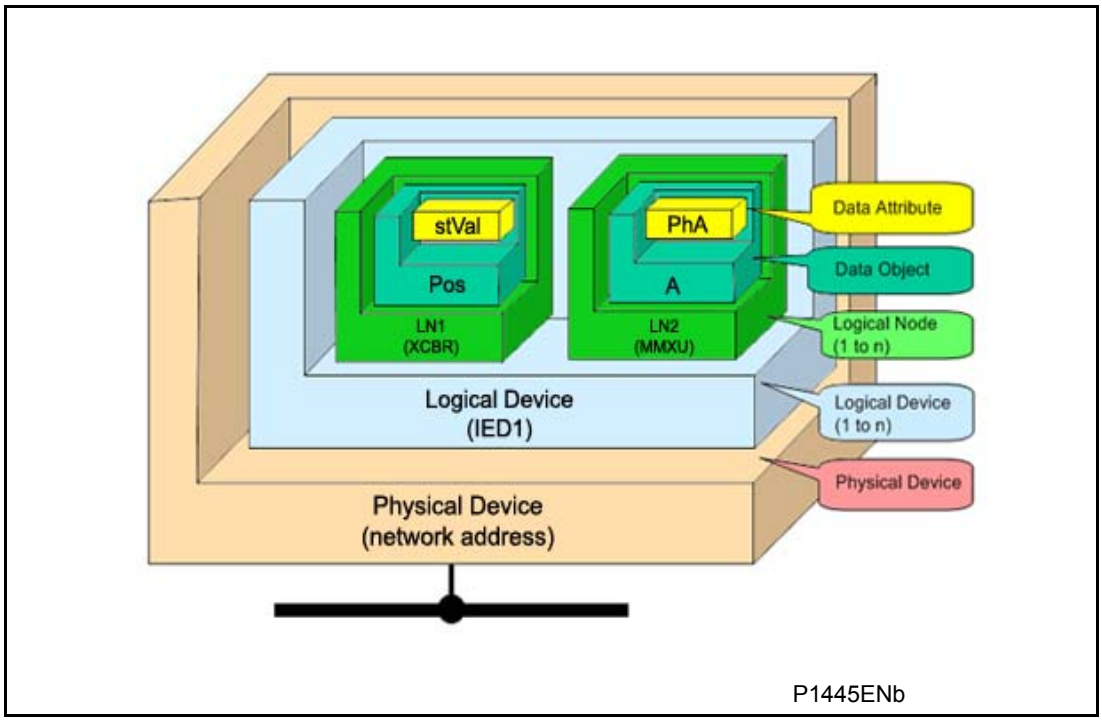

Figure 12: Data model layers in IEC 61850

The levels of this hierarchy can be described as follows:

- Physical Device – Identifies the actual IED within a system. Typically the device's name or IP address can be used (for example **Feeder_1** or **10.0.0.2**).
- Logical Device – Identifies groups of related Logical Nodes within the Physical Device. For the MiCOM relays, 5 Logical Devices exist: **Control, Measurements, Protection, Records, System**.
- Wrapper/Logical Node Instance – Identifies the major functional areas within the IEC 61850 data model. Either 3 or 6 characters are used as a prefix to define the functional group (wrapper) while the actual functionality is identified by a 4 character Logical Node name suffixed by an instance number. For example, XCBR1 (circuit breaker), MMXU1 (measurements), FrqPTOF2 (overfrequency protection, stage 2).
- Data Object – This next layer is used to identify the type of data you will be presented with. For example, **Pos** (position) of Logical Node type **XCBR**.
- Data Attribute – This is the actual data (measurement value, status, description, etc.). For example, **stVal** (status value) indicating actual position of circuit breaker for Data Object type Pos of Logical Node type **XCBR**.

6.3 IEC 61850 in MiCOM relays

IEC 61850 is implemented in MiCOM relays by use of a separate Ethernet card. This card manages the majority of the IEC 61850 implementation and data transfer to avoid any impact on the performance of the protection.

In order to communicate with an IEC 61850 IED on Ethernet, it is necessary only to know its IP address. This can then be configured into either:

- An IEC 61850 "client" (or master), for example a PACiS computer (MiCOM C264) or HMI, or
- An "MMS browser", with which the full data model can be retrieved from the IED, without any prior knowledge

6.3.1 Capability

The IEC 61850 interface provides the following capabilities:

1. Read access to measurements

All measurands are presented using the measurement Logical Nodes, in the 'Measurements' Logical Device. Reported measurement values are refreshed by the relay once per second, in line with the relay user interface.

2. Generation of unbuffered reports on change of status/measurement

Unbuffered reports, when enabled, report any change of state in statuses and/or measurements (according to deadband settings).

3. Support for time synchronization over an Ethernet link

Time synchronization is supported using SNTP (Simple Network Time Protocol); this protocol is used to synchronize the internal real time clock of the relays.

4. GOOSE peer-to-peer communication

GOOSE communications of statuses are included as part of the IEC 61850 implementation. Please see section 6.6 for more details.

5. Disturbance record extraction

Extraction of disturbance records, by file transfer, is supported by the MiCOM relays. The record is extracted as an ASCII format COMTRADE file.

6. Controls

The following control services are available:

- Direct Control
- Direct Control with enhanced security
- Select Before Operate (SBO) with enhanced security

Controls shall be applied to open and close circuit breakers via XCBR.Pos and DDB signals 'Control Trip' and 'Control Close'.

System/LLN0. LLN0.LEDRs shall be used to reset any trip LED indications.

7. Reports

Reports only include data objects that have changed and not the complete dataset. The exceptions to this are a General Interrogation request and integrity reports.

- Buffered Reports

Eight Buffered Report Control Blocks, (BRCB), are provided in SYSTEM/LLN0 in Logical Device 'System'

Buffered reports are configurable to use any configurable dataset located in the same Logical device as the BRCB (i.e. SYSTEM/LLN0)

- Unbuffered Reports

Sixteen Unbuffered Report Control Blocks, (URCB) are provided in SYSTEM/LLN0 in Logical Device 'System'

Unbuffered reports are configurable to use any configurable dataset located in the same Logical device as the URCB (i.e. SYSTEM/LLN0)

8. Configurable Data Sets

It is possible to create and configure datasets in any Logical Node using the IED Configurator. The maximum number of datasets will be specified in an IEDs ICD file. An IED is capable of handling 100 datasets.

9. Published GOOSE message

Eight GOCBs are provided in SYSTEM/LLN0.

10. Uniqueness of control

Uniqueness of control mechanism is implemented in the P24x to have consistency with the PACiS mechanism. This requires the relay to subscribe to the OrdRun signal from all devices in the system and be able to publish such a signal in a GOOSE message.

11. Select Active Setting Group

Functional protection groups can be enabled/disabled via private mod/beh attributes in Protection/LLN0.OcpMod object. Setting groups are selectable using the Setting Group Control Block class, (SGCB). The Active Setting Group can be selected using the System/LLN0.SP.SGCB.ActSG data attribute in Logical Device 'System'.

12. Quality for GOOSE

It is possible to process the quality attributes of any Data Object in an incoming GOOSE message. Devices that do not support IEC 61850 Quality flags shall send quality attributes as all zeros.

13. Address List

An Address List document (to be titled ADL) is produced for each IED which shows the mapping between the IEC 61850 data model and the internal data model of the IED. It includes a mapping in the reverse direction, which may be more useful. This document is separate from the PICS/MICS document.

14. Originator of Control

Originator of control mechanism is implemented for operate response message and in the data model on the ST of the related control object, consistent with the PACiS mechanism.

Setting changes (e.g. of protection settings) are not supported in the current IEC 61850 implementation. In order to keep this process as simple as possible, such setting changes are done using MiCOM S1 Studio Settings & Records program. This can be done as previously using the front port serial connection of the relay, or now optionally over the Ethernet link if preferred (this is known as "tunneling").

6.3.2 IEC 61850 configuration

One of the main objectives of IEC 61850 is to allow IEDs to be directly configured from a configuration file generated at system configuration time. At the system configuration level, the capabilities of the IED are determined from an IED capability description file (ICD) which is provided with the product. Using a collection of these ICD files from varying products, the entire protection of a substation can be designed, configured and tested (using simulation tools) before the product is even installed into the substation.

To aid in this process, the MiCOM S1 Studio Support Software provides an IED Configurator tool which allows the pre-configured IEC 61850 configuration file (an SCD file or CID file) to be imported and transferred to the IED. Alongside this, the requirements of manual configuration are satisfied by allowing the manual creation of configuration files for MiCOM relays based on their original IED capability description (ICD file).

Other features include the extraction of configuration data for viewing and editing, and a sophisticated error checking sequence which ensures that the configuration data is valid for sending to the IED and that the IED will function within the context of the substation.

To aid the user, some configuration data is available in the **IED CONFIGURATOR** column of the relay user interface, allowing read-only access to basic configuration data.

6.3.2.1 Configuration banks

To promote version management and minimize down-time during system upgrades and maintenance, the MiCOM relays have incorporated a mechanism consisting of multiple configuration banks. These configuration banks are categorized as:

- Active Configuration Bank
- Inactive Configuration Bank

Any new configuration sent to the relay is automatically stored into the inactive configuration bank, therefore not immediately affecting the current configuration. Both active and inactive configuration banks can be extracted at anytime.

When the upgrade or maintenance stage is complete, the IED Configurator tool can be used to transmit a command (to a single IED) authorizing the activation of the new configuration contained in the inactive configuration bank, by switching the active and inactive configuration banks. This technique ensures that the system down-time is minimized to the start-up time of the new configuration. The capability to switch the configuration banks is also available via the **IED CONFIGURATOR** column.

For version management, data is available in the **IED CONFIGURATOR** column in the relay user interface, displaying the SCL Name and Revision attributes of both configuration banks.

6.3.2.2 Network connectivity

Note: This section presumes a prior knowledge of IP addressing and related topics. Further details on this topic may be found on the Internet (search for IP Configuration) and in numerous relevant books.

Configuration of the relay IP parameters (IP Address, Subnet Mask, Gateway) and SNTP time synchronization parameters (SNTP Server 1, SNTP Server 2) is performed by the IED Configurator tool, so if these parameters are not available via an SCL file, they must be configured manually.

If the assigned IP address is duplicated elsewhere on the same network, the remote communications will operate in an indeterminate way. However, the relay will check for a conflict on every IP configuration change and at power up. An alarm will be raised if an IP conflict is detected.

The relay can be configured to accept data from networks other than the local network by using the 'Gateway' setting.

6.4 The data model of MiCOM relays

The data model naming adopted in the Px30 and Px40 relays has been standardized for consistency. Hence the Logical Nodes are allocated to one of the five Logical Devices, as appropriate, and the wrapper names used to instantiate Logical Nodes are consistent between Px30 and Px40 relays.

The data model is described in the Model Implementation Conformance Statement (MICS) document, which is available separately. The MICS document provides lists of Logical Device definitions, Logical Node definitions, Common Data Class and Attribute definitions, Enumeration definitions, and MMS data type conversions. It generally follows the format used in Parts 7-3 and 7-4 of the IEC 61850 standard.

6.5 The communication services of MiCOM relays

The IEC 61850 communication services which are implemented in the Px30 and Px40 relays are described in the Protocol Implementation Conformance Statement (PICS) document, which is available separately. The PICS document provides the Abstract Communication Service Interface (ACSI) conformance statements as defined in Annex A of Part 7-2 of the IEC 61850 standard.

6.6 Peer-to-peer (GSE) communications

The implementation of IEC 61850 Generic Substation Event (GSE) sets the way for cheaper and faster inter-relay communications. The generic substation event model provides the possibility for a fast and reliable system-wide distribution of input and output data values. The generic substation event model is based on the concept of an autonomous decentralization, providing an efficient method allowing the simultaneous delivery of the same generic substation event information to more than one physical device through the use of multicast services.

The use of multicast messaging means that IEC 61850 GOOSE uses a publisher-subscriber system to transfer information around the network*. When a device detects a change in one of its monitored status points it publishes (i.e. sends) a new message. Any device that is interested in the information subscribes (i.e. listens) to the data it contains.

Note: * Multicast messages cannot be routed across networks without specialized equipment.

Each new message is re-transmitted at user-configurable intervals until the maximum interval is reached, in order to overcome possible corruption due to interference, and collisions. In practice, the parameters which control the message transmission cannot be calculated. Time must be allocated to the testing of GSE schemes before or during commissioning, in just the same way a hardwired scheme must be tested.

6.6.1 Scope

A maximum of 64 virtual inputs are available within the PSL which can be mapped directly to a published dataset in a GOOSE message (Configurable dataset is supported).

Each GOOSE signal contained in a subscribed GOOSE message can be mapped to any of the 64 virtual inputs within the PSL. The virtual inputs allow the mapping to internal logic functions for protection control, directly to output contacts or LEDs for monitoring.

The MiCOM relay can subscribe to all GOOSE messages but only the following data types can be decoded and mapped to a virtual input:

- BOOLEAN
- BSTR2
- INT16
- INT32
- INT8
- UINT16
- UINT32
- UINT8

6.6.2 IEC 61850 GOOSE configuration

All GOOSE configuration is performed via the IED Configurator tool available within the MiCOM S1 Studio Support Software.

All GOOSE publishing configuration can be found under the ‘GOOSE Publishing’ tab in the configuration editor window. All GOOSE subscription configuration can be found under the ‘GOOSE SUBSCRIBE’ tab in the configuration editor window. Care should be taken to ensure that the configuration is correct, to ensure efficient GOOSE scheme operation.

Settings to enable GOOSE signaling and to apply Test Mode are available via the relay user interface.

6.7 Ethernet functionality

Settings relating to a failed Ethernet link are available in the **COMMUNICATIONS** column of the relay user interface.

6.7.1 Ethernet disconnection

IEC 61850 ‘Associations’ are unique and made to the relay between the client (master) and server (IEC 61850 device). In the event that the Ethernet is disconnected, such associations are lost, and will need to be re-established by the client. The TCP_KEEPALIVE function is implemented in the relay to monitor each association, and terminate any which are no longer active.

6.7.2 Redundant Ethernet communication ports

For information regarding the Redundant Ethernet communication ports, refer to the stand alone document *Px4x/EN REB/B11*.

6.7.3 Loss of power

The relay allows the re-establishment of associations by the client without a negative impact on the relay’s operation after having its power removed. As the relay acts as a server in this process, the client must request the association. Uncommitted settings are cancelled when power is lost, and reports requested by connected clients are reset and must be re-enabled by the client when it next creates the new association to the relay.

7 SECOND REAR COMMUNICATIONS PORT (COURIER)

Relays with Courier, MODBUS or IEC 60870-5-103 protocol on the first rear communications port have the option of a second rear port, running the Courier language. The second port is designed typically for dial-up modem access by protection engineers/operators, when the main port is reserved for SCADA communication traffic. Communication is via one of three physical links: K-Bus, EIA(RS)485 or EIA(RS)232[1]. The port supports full local or remote protection and control access by MiCOM S1 Studio software.

When changing the port configuration between K-Bus, EIA(RS)485 and EIA(RS)232 it is necessary to reboot the relay to update the hardware configuration of the second rear port.

There is also provision for the EIA(RS)485 and EIA(RS)232 protocols to be configured to operate with a modem, using an IEC 60870 10 bit frame.

Port configuration	Valid communication protocol
K-Bus	K-Bus
EIA(RS)232	IEC 60870 FT1.2, 11-bit frame IEC 60870, 10-bit frame
EIA(RS)485	IEC 60870 FT1.2, 11-bit frame IEC 60870, 10-bit frame

Table 14: Available physical links and their corresponding valid protocols

If both rear communications ports are connected to the same bus, care should be taken to ensure their address settings are not the same, to avoid message conflicts.

7.1 Courier protocol

The following documentation should be referred to for a detailed description of the Courier protocol, command set and link description.

- R6509 K-Bus Interface Guide
- R6510 IEC 60870 Interface Guide
- R6511 Courier Protocol
- R6512 Courier User Guide

The second rear communications port is functionally the same as detailed in section 2.2 for a Courier rear communications port, with the following exceptions:

7.2 Event extraction

Automatic event extraction is not supported when the first rear port protocol is Courier, MODBUS or CS103.

7.3 Disturbance record extraction

Automatic disturbance record extraction is not supported when the first rear port protocol is Courier, MODBUS or CS103.

SC

7.4 Connection to the second rear port

The second rear Courier port connects via the 9-way female D-type connector (SK4) in the middle of the card end plate (in between IRIG-B connector and lower D-type). The connection is compliant to EIA(RS)574.

For IEC 60870-5-2 over EIA(RS)232.

Pin	Connection
1	No Connection
2	RxD
3	TxD

Pin	Connection
4	DTR#
5	Ground
6	No Connection
7	RTS#
8	CTS#
9	No Connection

Table 15: EIA (RS)232 pin designation

For K-bus or IEC 60870-5-2 over EIA(RS)485

Pin*	Connection
4	EIA(RS)485 - 1 (+ ve)
7	EIA(RS)485 - 2 (- ve)

Table 16: EIA (RS)485 pin designation

* - All other pins unconnected.

- These pins are control lines for use with a modem.

Note 1: Connector pins 4 and 7 are used by both the EIA(RS)232and EIA(RS)485 physical layers, but for different purposes. Therefore, the cables should be removed during configuration switches.

Note 2: For the EIA(RS)485 protocol an EIA(RS)485 to EIA(RS)232 converter will be required to connect a modem or PC running MiCOM S1 Studio, to the relay. A Schneider Electric CK222 is recommended.

Note 3: EIA(RS)485 is polarity sensitive, with pin 4 positive (+) and pin 7 negative (-).

Note 4: The K-Bus protocol can be connected to a PC via a KITZ101 or 102.

8 SK5 PORT CONNECTION

The lower 9-way D-type connector (SK5) is currently unsupported. Do not connect to this port.

SYMBOLS AND GLOSSARY

Date:	**24th November 2009**
Hardware suffix:	**J (P241) K (P242/P243)**
Software version:	**57**
Connection diagrams:	**10P241xx (xx = 01 to 02)**
	10P242xx (xx = 01)
	10P243xx (xx = 01)

SG

TABLES

Table 1: Logic symbols 10

Table 2: Logic timers 12

Table 3: Logic gates 13

Symbols	Explanation
<	**Less than:** Used to indicate an “under” threshold, such as undercurrent (current dropout).
< 1	**First stage (under)**
< 2	**Second stage (under)**
>	**Greater than:** Used to indicate an “over” threshold, such as overcurrent (current overload).
> 1	**First stage (over)**
> 2	**Second stage (under)**
&	**Logical “AND”:** Used in logic diagrams to show an AND-gate function.
1	**Logical “OR”:** Used in logic diagrams to show an OR-gate function.
o	**A small circle on the input or output of a logic gate:** Indicates a NOT (invert) function.
52a	**A circuit breaker closed auxiliary contact:** The contact is in the same state as the breaker primary contacts.
52b	**A circuit breaker open auxiliary contact:** The contact is in the opposite state to the breaker primary contacts.
Σ	**“Sigma”:** Used to indicate a summation, such as cumulative current interrupted.
τ	**“Tau”:** Used to indicate a time constant, often associated with thermal characteristics.
Θn	**Nth thermal state of the machine**
A	**Initial thermal state of the machine in percentage of full thermal capacity**
Antibkspin	**Anti Backspin**
ADC	**Analog to Digital Converter**
BU	**Backup:** Typically a back-up protection element.
C/O	**A changeover contact having normally closed and normally open connections:** Often called a “form C” contact.
CB	Circuit breaker.
CB Aux.	**Circuit breaker auxiliary contacts:** Indication of the breaker open/closed status.
CBF	Circuit breaker failure protection.
Cct	**Circuit**
Char Angle	**Characteristic angle**
CLIO	**Current loop Input /Output:** 0-1mA/0-10mA/0-20mA/4-20mA transducer inputs and outputs CLI = current loop input - 0-1mA/0-10mA/0-20mA/4-20mA transducer input CLO = current loop output - 0-1mA/0-10mA/0-20mA/4-20mA transducer output
CT	Current transformer.
CTRL.	**Abbreviation of “Control”:** As used for the Control Inputs function.
CTS	**Current transformer supervision:** To detect CT input failure.
DDB	**Digital data bus within the programmable scheme logic:** A logic point that has a zero or 1 status. DDB signals are mapped in logic to customize the relay’s operation.

Symbols	Explanation
DEF	**Directional earth fault protection:** A directionalized earth (ground) fault aided scheme.
Dly	Time delay.
DT	**Abbreviation of "Definite Time":** An element which always responds with the same constant time delay on operation.
E/F	**Earth fault:** Directly equivalent to ground fault.
EMC	Electro magnetic compatibility
FFail	**A field failure (loss of excitation) element:** Could be labeled 40 in ANSI terminology.
FLC	**Full load current:** The nominal rated current for the circuit.
Flt.	**Abbreviation of "Fault":** Typically used to indicate faulted phase selection.
FN	Function.
Fwd.	Indicates an element responding to a flow in the "Forward" direction.
F<	**An underfrequency element:** Could be labeled 81U in ANSI terminology.
Gnd.	**Abbreviation of "Ground":** Used to identify settings that relate to ground (earth) faults.
GRP.	Abbreviation of "Group": Typically an alternative setting group.
I	Current.
I∧	**Current raised to a power:** Such as when breaker statistics monitor the square of ruptured current squared (∧ power = 2).
I<	**An undercurrent element:** Responds to current dropout.
I>	**A phase over current element:** Could be labeled 50/51 in ANSI terminology.
IED	Intelligent Electronic Device
I0	**Zero sequence current:** Equals one third of the measured neutral/residual current.
I1	Positive sequence current.
I2	Negative sequence current.
I1	Positive sequence current.
I2	Negative sequence current.
I_{eq}	Equivalent thermal current
I_{th}	Thermal current threshold
I2>	Negative sequence over current element Could be labeled 46OC in ANSI terminology.
I2pol	Negative sequence polarizing current.
IA	**Phase A current:** Might be phase L1, red phase.. or other, in customer terminology.
IB	**Phase B current:** Might be phase L2, yellow phase.. or other, in customer terminology.
IC	**Phase C current:** Might be phase L3, blue phase.. or other, in customer terminology.

Symbols	Explanation
ID	**Abbreviation of "Identifier":** Often a label used to track a software version installed.
IDMT	**Inverse definite minimum time:** A characteristic whose trip time depends on the measured input (e.g. current) according to an inverse-time curve.
In	**The rated nominal current of the relay:** Software selectable as 1 amp or 5 amp to match the line CT input.
IN	**Neutral current, or residual current:** This results from an internal summation of the three measured phase currents.
IN>	**A neutral (residual) over current element:** Detects earth (ground) faults. Could be labeled 50N/51N in ANSI terminology.
Inh	An inhibit signal.
ISEF>	**A sensitive Earth Fault over current element:** Detects earth (ground) faults. Could be labeled 50N/51N in ANSI terminology.
Inst.	**An element with "instantaneous" operation:** i.e. having no deliberate time delay.
I/O	**Abbreviation of "Inputs and Outputs":** Used in connection with the number of opto coupled inputs and output contacts within the relay.
I/P	Abbreviation of "Input".
K	Thermal coefficient
LCD	**Liquid crystal display:** The front-panel text display on the relay.
LD	**Abbreviation of "Level Detector":** An element responding to a current or voltage below its set threshold.
LED	**Light emitting diode:** Red or green indicator on the relay front-panel.
MCB	**A "miniature circuit breaker":** Used instead of a fuse to protect VT secondary circuits.
Mot Diff	**A motor differential element:** Could be labeled 87 in ANSI terminology.
N	**Indication of "Neutral" involvement in a fault:** i.e. a ground (earth) fault.
Nb	**Number**
N/A	Not applicable.
N/C	**A normally closed or "break" contact:** Often called a "form B" contact.
NLR	**Non Linear Resistor** (Metrosil)
N/O	**A normally open or "make" contact:** Often called a "form A" contact.
NPS	Negative phase sequence.
NXT	**Abbreviation of "Next":** In connection with hotkey menu navigation.
NVD	**Neutral voltage displacement:** Equivalent to residual over voltage protection.
O/P	Abbreviation of "output".
Opto	**An opto coupled logic input:** Alternative terminology: binary input.

Symbols	Explanation
-P>	**A reverse power (W) element:** Could be labeled 32R in ANSI terminology.
P>	**An overpower (W) element:** Could be labeled 32O in ANSI terminology.
P<	**A low forward power (W) element:** Could be labeled 32L in ANSI terminology.
P1	**Used in IEC terminology to identify the primary CT terminal polarity:** Replace by a dot when using ANSI standards.
P2	**Used in IEC terminology to identify the primary CT terminal polarity:** The non-dot terminal.
PCB	Printed Circuit Board.
Ph	**Abbreviation of "Phase":** Used in distance settings to identify settings that relate to phase-phase faults.
Pol	**Abbreviation of "Polarizing":** Typically the polarizing voltage used in making directional decisions.
PN>	**A Wattmetric earth fault element:** Calculated using residual voltage and current quantities.
PSL	**Programmable scheme logic:** The part of the relay's logic configuration that can be modified by the user, using the graphical editor within MiCOM S1 software.
Prol	**Prolonged**
Pu	**Per Unit**
R	Resistance (Ω).
R Gnd.	**A distance zone resistive reach setting:** Used for ground (earth) faults.
RCA	**Abbreviation of "Relay Characteristic Angle":** The center of the directional characteristic.
Rev.	Indicates an element responding to a flow in the "reverse" direction.
RMS	**The equivalent a.c. current:** Taking into account the fundamental, plus the equivalent heating effect of any harmonics. Abbreviation of "root mean square".
RP	**Abbreviation of "Rear Port":** The communication ports on the rear of the relay.
RTD	Resistance temperature device.
Rx	**Abbreviation of "Receive":** Typically used to indicate a communication receive line/pin.
Reacc	**Reacceleration**
R_L	**Lead/Wire resistance**
R_{st}	**Stabilizing resistor**
RTU	**Remote Terminal Unit**
S1	**Used in IEC terminology to identify the secondary CT terminal polarity:** Replace by a dot when using ANSI standards.
S2	**Used in IEC terminology to identify the secondary CT terminal polarity:** The non-dot terminal. Also used to signify negative sequence apparent power, S2 = V2 x I2.
Sen	Sensitive
SEF	Sensitive Earth Fault Protection.
SCADA	**Supervisory Control and Data Acquisition**
Start	**Same as Pickup**

Symbols	Explanation
t	A time delay.
T	Ambient temperature in degrees Celsius
T1	Thermal characteristic time constant during over load
T2	Thermal characteristic time constant during start up period
T_r	Thermal characteristic time constant during cooling down period (stopping)
t_{op}	Operating time
t_n	Elapsed time often used in comparison with a set time
TCS	Trip circuit supervision.
TD	**The time dial multiplier setting:** Applied to inverse-time curves (ANSI/IEEE).
TE	**A standard for measuring the width of a relay case:** One inch = 5TE units.
Thermal I>	A stator thermal overload element: Could be labeled 49 in ANSI terminology.
TMS	The time multiplier setting applied to inverse-time curves (IEC).
Tx	**Abbreviation of "Transmit":** Typically used to indicate a communication transmit line/pin.
V	Voltage.
V<	**An undervoltage element:** Could be labeled 27 in ANSI terminology.
V>	**An overvoltage element:** Could be labeled 59 in ANSI terminology.
V0	**Zero sequence voltage:** Equals one third of the measured neutral/residual voltage.
V1	Positive sequence voltage.
V2	Negative sequence voltage.
V2>	**A negative phase sequence (NPS) over voltage element:** Could be labeled 47 in ANSI terminology.
V2pol	Negative sequence polarizing voltage.
VA	**Phase A voltage:** Might be phase L1, red phase.. or other, in customer terminology.
VB	**Phase B voltage:** Might be phase L2, yellow phase.. or other, in customer terminology.
VC	**Phase C voltage:** Might be phase L3, blue phase.. or other, in customer terminology.
Vk	IEC knee point voltage of a current transformer.
Vn	**The rated nominal voltage of the relay:** To match the line VT input.
VN	Neutral voltage displacement, or residual voltage.
VN>	**A residual (neutral) over voltage element:** Could be labeled 59N in ANSI terminology.
Vrem.	Remanent voltage, phase to phase measurement, connected on the Motor side, used in Antibackspin protection.
Vres.	Neutral voltage displacement, or residual voltage.
V_r	Residual voltage- Voltage output of an open delta VT secondary
V_s	Voltage setting used for high impedance differential protection
VT	Voltage transformer.

Symbols	Explanation
Vx	**An auxiliary supply voltage:** Typically the substation battery voltage used to power the relay.
Z<	**An under impedance element:** Could be labeled 21 in ANSI terminology.
Z0	Zero sequence impedance.
Z1	Positive sequence impedance.
Z2	Negative sequence impedance.

Table 1: List of principle symbols

Logic symbols	Explanation	Time chart
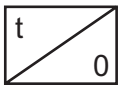	Delay on pick-up timer, t	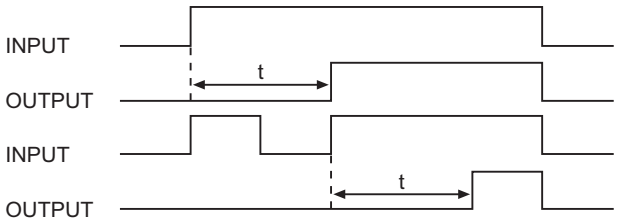
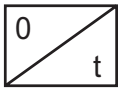	Delay on drop-off timer, t	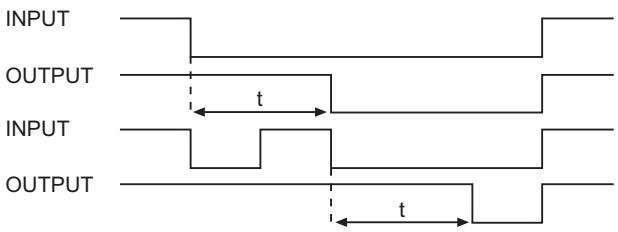
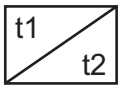	Delay on pick-up/drop-off timer	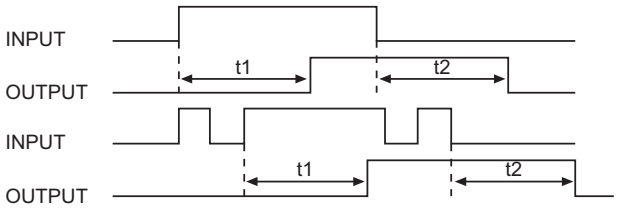
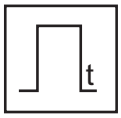	Pulse timer	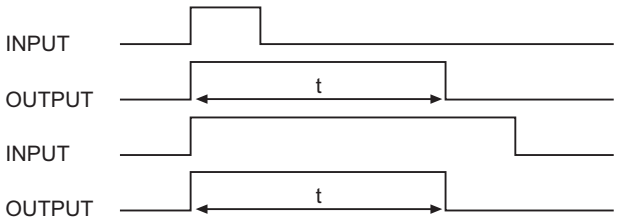
	Pulse pick-up falling edge	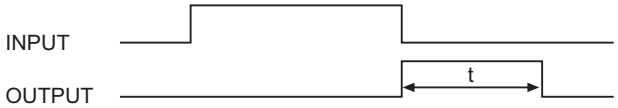
	Pulse pick-up raising edge	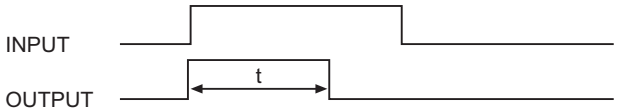
	Latch	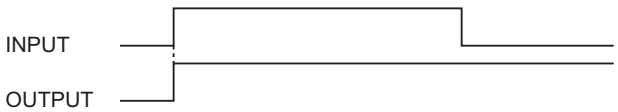

Logic symbols	Explanation	Time chart
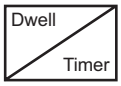	Dwell timer	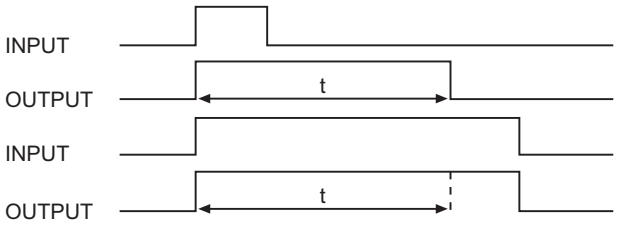
	Straight (non latching): Hold value until input reset signal	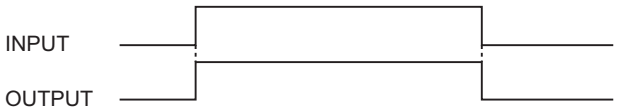

Table 2: Logic timers

SG

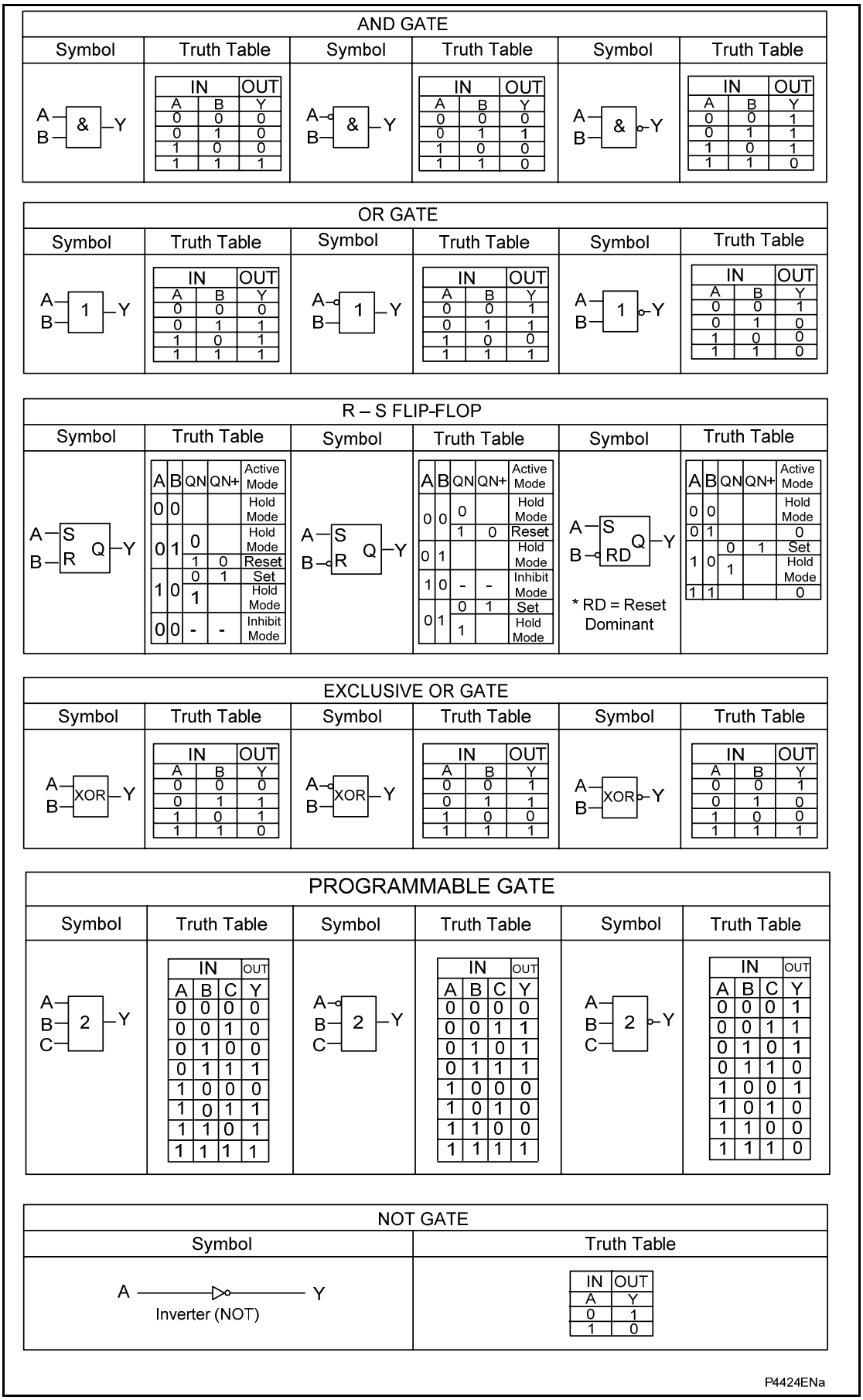

Table 3: Logic gates

SG

INSTALLATION

Date:	**24th November 2009**
Hardware suffix:	**J (P241) K (P242/P243)**
Software version:	**57**
Connection diagrams:	**10P241xx (xx = 01 to 02)** **10P242xx (xx = 01)** **10P243xx (xx = 01)**

CONTENTS

1	**RECEIPT OF RELAYS**	**5**
2	**HANDLING OF ELECTRONIC EQUIPMENT**	**6**
3	**STORAGE**	**7**
4	**UNPACKING**	**8**
5	**RELAY MOUNTING**	**9**
5.1	**Rack mounting**	**9**
5.2	**Panel mounting**	**10**
6	**RELAY WIRING**	**12**
6.1	**Medium and heavy duty terminal block connections**	**12**
6.2	**EIA(RS)485 port**	**13**
6.3	**Ethernet port for IEC 61850 (if applicable)**	**13**
6.4	**RTD connections (if applicable)**	**13**
6.5	**Current loop input output (CLIO) connections (if applicable)**	**14**
6.6	**IRIG-B connections (if applicable)**	**14**
6.7	**EIA(RS)232 port**	**15**
6.8	**Download/monitor port**	**15**
6.9	**Second EIA(RS)232/485 port**	**15**
6.9.1	Connection to the second rear port	15
6.10	**Protective conductor (earth) connection**	**16**
7	**ANALOGUE INPUTS**	**17**
7.1	**CTs inputs for the phase and earth currents**	**17**
7.1.1	3 CTs and core balance CT configuration	17
7.1.2	3CTs configuration	18
7.1.3	2 CTs and core balance CT configuration	18
7.2	**VT inputs**	**19**
7.2.1	Three phase VTs configuration	19
7.2.2	Two phase VTs and residual VT configuration	20
7.2.3	Two Phase VTs and Anti-Backspin (Vremanent phase-phase) VT configuration	20
8	**P24X CASE DIMENSIONS**	**22**
9	**P24X EXTERNAL CONNECTION DIAGRAMS**	**24**

FIGURES

Figure 1: Location of battery isolation strip 9

Figure 2: Rack mounting of relays 10

Figure 3: 3 CT and core balance CT configuration 17

Figure 4: 3 CT configuration 18

Figure 5: 2 CTs and core balance CT configuration 18
Figure 6: Three phase VTs configuration 19
Figure 7: Two phase VTs and residual VT configuration 20
Figure 8: Two phase VTs and Anti-Backspin (remanent phase-phase) VT configuration 21
Figure 9: P241 case dimensions (40TE case) 22
Figure 10: P242 case dimensions (60TE case) 23
Figure 11: P243 case dimensions (80TE case) 23
Figure 12: Comms. options MiCOM Px40 platform 24
Figure 13: P241 external connection diagram – 3VTs connection + RTD option 25
Figure 14: P241 external connection diagram – 2VTs and residual connection + RTD option 26
Figure 15: P241 external connection diagram – RTD option 27
Figure 16: P241 external connection diagram – 3VTs connection + CLIO option 28
Figure 17: P241 external connection diagram – CLIO option 29
Figure 18: P242 external connection diagram – 3VTs connection + RTD + CLIO options 30
Figure 19: P242 external connection diagram – 3VTs connection + RTD + CLIO options 31
Figure 20: P243 external connection diagram – 3VTs connection + RTD + CLIO options – biased differential [87M] 32
Figure 21: P243 external connection diagram – 3VTs connection + RTD + CLIO – high impedance differential [87M] 33
Figure 22: P243 external connection diagram – 3VTs connection + RTD + CLIO options 34
Figure 23: Assembly P241 motor protection relay (40TE) (8 I/P & 7 O/P with optional RTD & CLIO) 35
Figure 24: Assembly drawing for P241 with optional 12 I/P and 11 O/P 36
Figure 25: Assembly drawing for P241 with optional IEC 61850 (40 TE) 37
Figure 26: Assembly P242 motor protection relay (60TE) (16 I/P & 16 O/P with optional RTD & CLIO) 38
Figure 27: Assembly P243 motor protection relay (80TE) (16 I/P & 16 O/P with optional RTD & CLIO) 39

TABLES

Table 1: Blanking plates 10
Table 2: IP52 sealing rings 11
Table 3: M4 90° crimp ring terminals 12
Table 4: Signals on the Ethernet connector 13
Table 5: Description needed 15
Table 6: Description needed 15

1 RECEIPT OF RELAYS

Protective relays, although generally of robust construction, require careful treatment prior to installation on site. On receipt, relays should be examined immediately to ensure no external damage has been sustained in transit. If damage has been sustained, a claim should be made to the transport contractor and Schneider Electric should be promptly notified.

Relays that are supplied unmounted and not intended for immediate installation should be returned to their protective polythene bags and delivery carton. Section 3 gives more information about the storage of relays.

2 HANDLING OF ELECTRONIC EQUIPMENT

A person's normal movements can easily generate electrostatic potentials of several thousand volts. Discharge of these voltages into semiconductor devices when handling electronic circuits can cause serious damage that, although not always immediately apparent, will reduce the reliability of the circuit. This is particularly important to consider where the circuits use complementary metal oxide semiconductors (CMOS), as is the case with these relays.

The relay's electronic circuits are protected from electrostatic discharge when housed in the case. Do not expose them to risk by removing the front panel or printed circuit boards unnecessarily.

Each printed circuit board incorporates the highest practicable protection for its semiconductor devices. However, if it becomes necessary to remove a printed circuit board, the following precautions should be taken to preserve the high reliability and long life for which the relay has been designed and manufactured.

1. Before removing a printed circuit board, ensure that you are at the same electrostatic potential as the equipment by touching the case.
2. Handle analog input modules by the front panel, frame or edges of the circuit boards. Printed circuit boards should only be handled by their edges. Avoid touching the electronic components, printed circuit tracks or connectors.
3. Do not pass the module to another person without first ensuring you are both at the same electrostatic potential. Shaking hands achieves equipotential.
4. Place the module on an anti-static surface, or on a conducting surface that is at the same potential as yourself.
5. If it is necessary to store or transport printed circuit boards removed from the case, place them individually in electrically conducting anti-static bags.

In the unlikely event that you are making measurements on the internal electronic circuitry of a relay in service, it is preferable that you are earthed to the case with a conductive wrist strap. Wrist straps should have a resistance to ground between 500 kΩ to 10 MΩ. If a wrist strap is not available you should maintain regular contact with the case to prevent a build-up of electrostatic potential. Instrumentation which may be used for making measurements should also be earthed to the case whenever possible.

More information on safe working procedures for all electronic equipment can be found in BS EN 100015: Part 1:1992. It is strongly recommended that detailed investigations on electronic circuitry or modification work should be carried out in a special handling area such as described in the aforementioned British Standard document.

3 STORAGE

If relays are not to be installed immediately upon receipt, they should be stored in a place free from dust and moisture in their original cartons. Where de-humidifier bags have been included in the packing they should be retained. The action of the de-humidifier crystals will be impaired if the bag is exposed to ambient conditions and may be restored by gently heating the bag for about an hour prior to replacing it in the carton.

To prevent battery drain during transportation and storage a battery isolation strip is fitted during manufacture. With the lower access cover open, presence of the battery isolation strip can be checked by a red tab protruding from the positive side.

Care should be taken on subsequent unpacking that any dust that has collected on the carton does not fall inside. In locations of high humidity the carton and packing may become impregnated with moisture and the de-humidifier crystals will lose their efficiency.

Prior to installation, relays should be stored at a temperature of between –25º to +70ºC (-13ºF to +158ºF).

4 UNPACKING

Care must be taken when unpacking and installing the relays so that none of the parts are damaged and additional components are not accidentally left in the packing or lost. Ensure that any User's CDROM or technical documentation is NOT discarded - this should accompany the relay to its destination substation.

Note: With the lower access cover open, the red tab of the battery isolation strip will be seen protruding from the positive side of the battery compartment. Do not remove this strip because it prevents battery drain during transportation and storage and will be removed as part of the commissioning tests.

Relays must only be handled by skilled persons.

The site should be well lit to facilitate inspection, clean, dry and reasonably free from dust and excessive vibration. This particularly applies to installations that are being carried out at the same time as construction work.

5 RELAY MOUNTING

MiCOM relays are dispatched either individually or as part of a panel/rack assembly.

Individual relays are normally supplied with an outline diagram showing the dimensions for panel cut-outs and hole centers. This information can also be found in the product publication.

Secondary front covers can also be supplied as an option item to prevent unauthorized changing of settings and alarm status. They are available in sizes 40TE (GN0037 001) and 60TE/80TE (GN0038 001) for P24xxxxxxxxxxA/C and sizes 40TE (GN0242 001) and 60TE/80TE (GN0243 001) for P24xxxxxxxxxxJ/K.

The design of the relay is such that the fixing holes in the mounting flanges are only accessible when the access covers are open and hidden from sight when the covers are closed.

If a P991 or MMLG test block is to be included, it is recommended that, when viewed from the front, it be positioned on the right-hand side of the relay (or relays) with which it is associated. This minimizes the wiring between the relay and test block, and allows the correct test block to be easily identified during commissioning and maintenance tests.

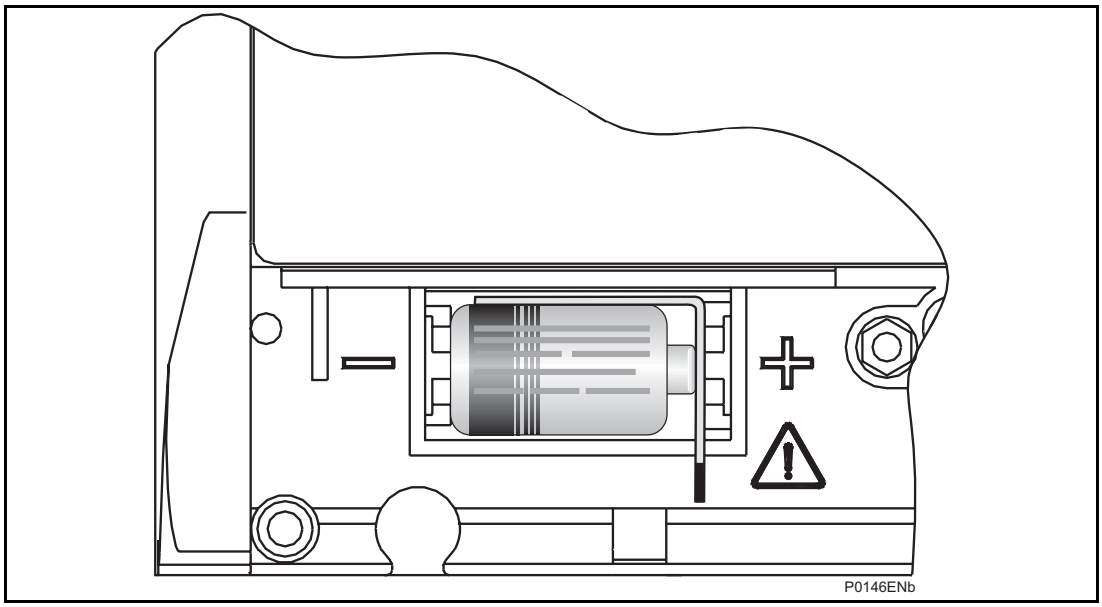

Figure 1: Location of battery isolation strip

If it is necessary to test correct relay operation during the installation, the battery isolation strip can be removed but should be replaced if commissioning of the scheme is not imminent. This will prevent unnecessary battery drain during transportation to site and installation. The red tab of the isolation strip can be seen protruding from the positive side of the battery compartment when the lower access cover is open. To remove the isolation strip, pull the red tab whilst lightly pressing the battery to prevent it falling out of the compartment. When replacing the battery isolation strip, ensure that the strip is refitted as shown in Figure 1, i.e. with the strip behind the battery with the red tab protruding.

5.1 Rack mounting

MiCOM relays may be rack mounted using single tier rack frames (our part number FX0021 101), as illustrated in Figure 2. These frames have been designed to have dimensions in accordance with IEC 60297 and are supplied pre-assembled ready to use. On a standard 483 mm rack system this enables combinations of widths of case up to a total equivalent of size 80TE to be mounted side by side.

The two horizontal rails of the rack frame have holes drilled at approximately 26 mm intervals and the relays are attached via their mounting flanges using M4 Taptite self-tapping screws with captive 3 mm thick washers (also known as a SEMS unit). These fastenings are available in packs of 5 (our part number ZA0005 104).

Note: Conventional self-tapping screws, including those supplied for mounting MiDOS relays, have marginally larger heads which can damage the front cover molding if used.

Once the tier is complete, the frames are fastened into the racks using mounting angles at each end of the tier.

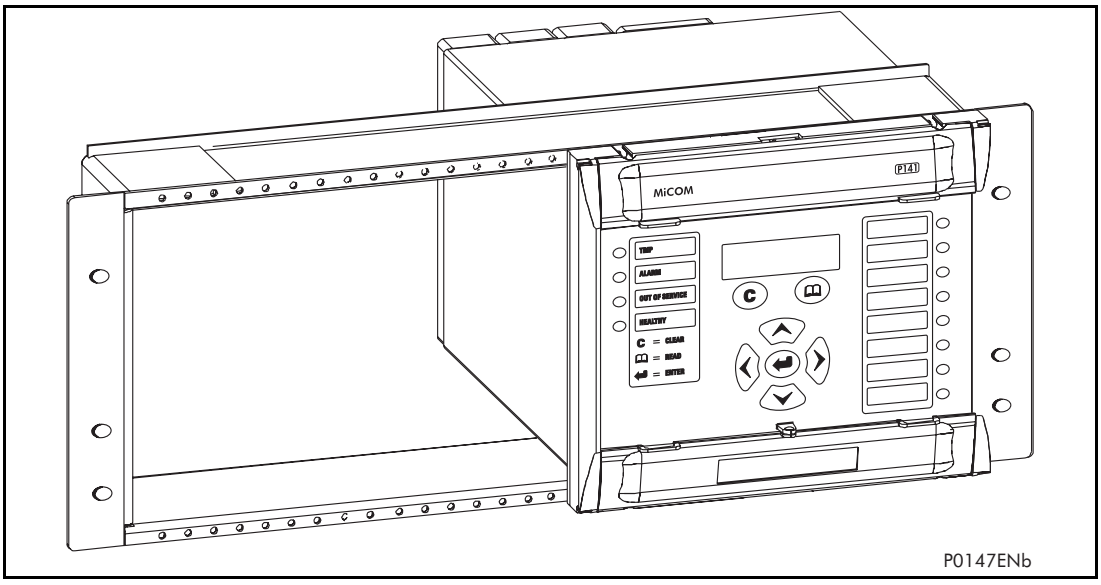

Figure 2: Rack mounting of relays

Relays can be mechanically grouped into single tier (4U) or multi-tier arrangements by means of the rack frame. This enables schemes using products from the MiCOM and MiDOS product ranges to be pre-wired together prior to mounting.

Where the case size summation is less than 80TE on any tier, or space is to be left for installation of future relays, blanking plates may be used. These plates can also be used to mount ancillary components. Table 1 shows the sizes that can be ordered.

Note: Blanking plates are only available in black.

Further details on mounting MiDOS relays can be found in publication R7012, “MiDOS Parts Catalogue and Assembly Instructions”.

Case size summation	Blanking plate part number
5TE	GJ2028 101
10TE	GJ2028 102
15TE	GJ2028 103
20TE	GJ2028 104
25TE	GJ2028 105
30TE	GJ2028 106
35TE	GJ2028 107
40TE	GJ2028 108

Table 1: Blanking plates

IN

5.2 Panel mounting

The relays can be flush mounted into panels using M4 SEMS Taptite self-tapping screws with captive 3 mm thick washers (also known as a SEMS unit). These fastenings are available in packs of 5 (our part number ZA0005 104).

Note: Conventional self-tapping screws, including those supplied for mounting MiDOS relays, have marginally larger heads which can damage the front cover molding if used.

Alternatively tapped holes can be used if the panel has a minimum thickness of 2.5 mm.

For applications where relays need to be semi-projection or projection mounted, a range of collars are available. Further details can be obtained from the Contracts Department of Schneider Electric.

Where several relays are to be mounted in a single cut-out in the panel, it is advised that they are mechanically grouped together horizontally and/or vertically to form rigid assemblies prior to mounting in the panel.

Note: It is not advised that MiCOM relays are fastened using pop rivets as this will not allow the relay to be easily removed from the panel in the future if repair is necessary.

If it is required to mount a relay assembly on a panel complying to BS EN60529 IP52, it will be necessary to fit a metallic sealing strip between adjoining relays (Part no GN2044 001) and a sealing ring selected from Table 2 around the complete assembly.

Width	Single tier	Double tier
10TE	GJ9018 002	GJ9018 018
15TE	GJ9018 003	GJ9018 019
20TE	GJ9018 004	GJ9018 020
25TE	GJ9018 005	GJ9018 021
30TE	GJ9018 006	GJ9018 022
35TE	GJ9018 007	GJ9018 023
40TE	GJ9018 008	GJ9018 024
45TE	GJ9018 009	GJ9018 025
50TE	GJ9018 010	GJ9018 026
55TE	GJ9018 011	GJ9018 027
60TE	GJ9018 012	GJ9018 028
65TE	GJ9018 013	GJ9018 029
70TE	GJ9018 014	GJ9018 030
75TE	GJ9018 015	GJ9018 031
80TE	GJ9018 016	GJ9018 032

Table 2: IP52 sealing rings

Further details on mounting MiDOS relays can be found in publication R7012, “MiDOS Parts Catalogue and Assembly Instructions”.

6 RELAY WIRING

This section serves as a guide to selecting the appropriate cable and connector type for each terminal on the MiCOM relay.

Before carrying out any work on the equipment the user should be familiar with the contents of the Safety Section/Safety Guide SFTY/4LM/G11 or later issue and the ratings on the equipment's rating label.

6.1 Medium and heavy duty terminal block connections

Loose relays are supplied with sufficient M4 screws for making connections to the rear mounted terminal blocks using ring terminals, with a recommended maximum of two ring terminals per relay terminal.

If required, Schneider Electric can supply M4 90° crimp ring terminals in three different sizes depending on wire size (see Table 3). Each type is available in bags of 100.

Part number	Wire size	Insulation color
ZB9124 901	0.25 – 1.65 mm2 (22 – 16 AWG)	Red
ZB9124 900	1.04 – 2.63 mm2 (16 – 14 AWG)	Blue
ZB9124 904	2.53 – 6.64 mm2 (12 – 10 AWG)	Uninsulated*

Table 3: M4 90° crimp ring terminals

*To maintain the terminal block insulation requirements for safety, an insulating sleeve should be fitted over the ring terminal after crimping.

The following minimum wire sizes are recommended:

- Current Transformers 2.5 mm2
- Auxiliary Supply, Vx 1.5 mm2
- EIA(RS)485 Port See separate section
- Other Circuits 1.0 mm2

Due to the limitations of the ring terminal, the maximum wire size that can be used for any of the medium or heavy duty terminals is 6.0 mm2 using ring terminals that are not pre-insulated. Where it is required to only use pre-insulated ring terminals, the maximum wire size that can be used is reduced to 2.63 mm2 per ring terminal. If a larger wire size is required, two wires should be used in parallel, each terminated in a separate ring terminal at the relay.

The wire used for all connections to the medium and heavy duty terminal blocks, except the first rear EIA(RS)485 port and second rear EIA(RS)232/485 port, should have a minimum voltage rating of 300 Vrms.

It is recommended that the auxiliary supply wiring should be protected by a 16 A high rupture capacity (HRC) fuse of type NIT or TIA. For safety reasons, current transformer circuits must never be fused. Other circuits should be appropriately fused to protect the wire used.

Each opto input has selectable filtering. This allows use of a pre-set filter of ½ cycle which renders the input immune to induced noise on the wiring: although this method is secure it can be slow, particularly for intertripping. This can be improved by switching off the ½ cycle filter in which case one of the following methods to reduce ac noise should be considered. The first method is to use double pole switching on the input, the second is to use screened twisted cable on the input circuit. The recognition time of the opto inputs without the filtering is <2 ms and with the filtering is <12 ms.

6.2 EIA(RS)485 port

Connections to the first rear EIA(RS)485 port are made using ring terminals. It is recommended that a 2-core screened cable be used with a maximum total length of 1000 m or 200 nF total cable capacitance.

A typical cable specification would be:

Each core:	16/0.2 mm copper conductors PVC insulated
Nominal conductor area:	0.5 mm2 per core
Screen:	Overall braid, PVC sheathed

6.3 Ethernet port for IEC 61850 (if applicable)

Fiber Optic Port

The relays can have 100 Mbps Ethernet port. FO connection is recommended for use in permanent connections in a substation environment. The 100 Mbit port uses type ST connector, compatible with fiber multimode 50/125 µm or 62.5/125 µm – 13000 nm.

RJ-45 Metallic Port

The user can connect to either a 10Base-T or a 100Base-TX Ethernet hub; the port will automatically sense which type of hub is connected. Due to possibility of noise and interference on this part, it is recommended that this connection type be used for short-term connections and over short distance. Ideally, where the relays and hubs are located in the same cubicle.

The connector for the Ethernet port is a shielded RJ-45. Table 4 shows the signals and pins on the connector.

Pin	Signal name	Signal definition
1	TXP	Transmit (positive)
2	TXN	Transmit (negative)
3	RXP	Receive (positive)
4	-	Not used
5	-	Not used
6	RXN	Receive (negative)
7	-	Not used
8	-	Not used

Table 4: Signals on the Ethernet connector

6.4 RTD connections (if applicable)

Where RTD inputs are available on a MiCOM relay, the connections are made using screw clamp connectors on the rear of the relay that can accept wire sizes between 0.1 mm2 and 1.5 mm2. The connections between the relay and the RTDs must be made using a screened 3-core cable with a total resistance less than 10 Ω. The cable should have a minimum voltage rating of 300 Vrms.

A 3-core cable should be used even for 2-wire RTD applications, as it allows for the cable's resistance to be removed from the overall resistance measurement. In such cases the third wire is connected to the second wire at the point the cable is joined to the RTD.

The screen of each cable must only be earthed at one end, preferably at the relay end and must be continuous. Multiple earthing of the screen can cause circulating current to flow along the screen, which induces noise and is unsafe.

It is recommended to minimize noise pick-up in the RTD cables by keeping them close to earthed metal casings and avoiding areas of high electromagnetic and radio interference. The RTD cables should not be run adjacent to or in the same conduit as other high voltage or current cables.

A typical cable specification would be:

Each core:	7/0.2 mm copper conductors heat resistant PVC insulated
Nominal conductor area:	0.22 mm2 per core
Screen:	Nickel-plated copper wire braid heat resistant PVC sheathed

The extract below may be useful in defining cable recommendations for the RTDs:

Noise pick up by cables can be categorized in to three types:

- Resistive
- Capacitive
- Inductive

Resistive coupling requires there to be an electrical connection to the noise source. So assuming that the wire and cable insulation is sound and that the junctions are clean then this can be dismissed.

Capacitive coupling requires there to be sufficient capacitance for the impedance path to the noise source to be small enough to allow for significant coupling. This is a function of the dielectric strength between the signal cable on the noise source and the potential (i.e. power) of the noise source.

Inductive coupling occurs when the signal cable is adjacent to a cable/wire carrying the noise or it is exposed to a radiated EMF.

Standard screened cable is normally used to protect against capacitively coupled noise, but in order for it to be effective the screen must only be bonded to the system ground at one point, otherwise a current could flow and the noise would be coupled in to the signal wires of the cable. There are different types of screening available, but basically there are two types: aluminum foil wrap and tin-copper braid.

Foil screens are good for low to medium frequencies and braid is good for high frequencies. High-fidelity screen cables provide both types.

Protection against magnetic inductive coupling requires very careful cable routing and magnetic shielding. The latter can be achieved with steel-armored cable and the use of steel cable trays. It is important that the armor of the cable is grounded at both ends so that the EMF of the induced current cancels the field of the noise source and hence shields the cables conductors from it. (However, the design of the system ground must be considered and care taken to not bridge two isolated ground systems since this could be hazardous and defeat the objectives of the original ground design). The cable should be laid in the cable trays as close as possible to the metal of the tray and under no circumstance should any power cable be in or near to the tray. (Power cables should only cross the signal cables at 90 degrees and never be adjacent to them).

Clearly, both the capacitive and inductive screens must be contiguous from the RTD probes to the relay terminals.

The best types of cable are those provided by the RTD manufactures. These tend to be three conductors (a so call "triad") which are screened with foil. Such triad cables are available in armored forms as well as multi-triad armored forms.

6.5 Current loop input output (CLIO) connections (if applicable)

Where current loop inputs and outputs are available on a MiCOM relay, the connections are made using screw clamp connectors, as per the RTD inputs, on the rear of the relay which can accept wire sizes between 0.1 mm2 and 1.5 mm2. It is recommended that connections between the relay and the current loop inputs and outputs are made using a screened cable. The wire should have a minimum voltage rating of 300 Vrms.

6.6 IRIG-B connections (if applicable)

The IRIG-B input has a BNC connection. It is recommended that the cable and connector have a characteristic impedance of 50 Ω. It is also recommended that connections between the IRIG-B equipment and the relay are made using coaxial cable 50 Ω characteristic impedance with a halogen free, fire retardant sheath, type RG59LSF.

6.7 EIA(RS)232 port

Short term connections to the EIA(RS)232 port, located behind the bottom access cover, can be made using a screened multi-core communication cable up to 15 m long, or a total capacitance of 2500 pF. The cable should be terminated at the relay end with a 9-way, metal shelled, D-type male plug. Section 1.9 of *P24x/EN GS* of this manual details the pin allocations.

6.8 Download/monitor port

Short term connections to the download/monitor port, located behind the bottom access cover, can be made using a screened 25-core communication cable up to 4 m long. The cable should be terminated at the relay end with a 25-way, metal shelled, D-type male plug. Section 1.9 of *P24x/EN GS* and section 3.5 of *P24x/EN CM* of this manual details the pin allocations.

6.9 Second EIA(RS)232/485 port

Relays with Courier, MODBUS, IEC 60870-5-103 or DNP3 protocol on the first rear communications port have the option of a second rear port, running Courier language. The second rear communications port can be used over one of three physical links: twisted pair K-Bus (non-polarity sensitive), twisted pair EIA(RS)485 (connection polarity sensitive) or EIA(RS)2321.

6.9.1 Connection to the second rear port

The second rear Courier port connects via a 9-way female D-type connector (SK4) in the middle of the card end plate (in between IRIG-B connector and lower D-type). The connection is compliant to EIA(RS)574.

For IEC 60870-5-2 over EIA(RS)232/574

Pin	Connection
1	No Connection
2	RxD
3	TxD
4	DTR#
5	Ground
6	No Connection
7	RTS#
8	CTS#
9	No Connection

Table 5: Description needed

Connections to the second rear port configured for EIA(RS)232 operation can be made using a screened multi-core communication cable up to 15 m long, or a total capacitance of 2500 pF. The cable should be terminated at the relay end with a 9-way, metal shelled,

D-type male plug. The table above details the pin allocations.

For K-bus or IEC 60870-5-2 over EIA(RS)485

Pin*	Connection
4	EIA(RS)485 - 1 (+ ve)
7	EIA(RS)485 - 2 (- ve)

Table 6: Description needed

* - All other pins unconnected.

- These pins are control lines for use with a modem.

[1] This port is actually compliant to EIA(RS)574; the 9-pin version of EIA(RS)232, see www.tiaonline.org.

Note 1: Connector pins 4 and 7 are used by both the EIA(RS)232/574 and EIA(RS)485 physical layers, but for different purposes. Therefore, the cables should be removed during configuration switches.

Note 2: For the EIA(RS)485 protocol an EIA(RS)485 to EIA(RS)232/574 converter will be required to connect a modem or PC running MiCOM S1 Studio, to the relay. A Schneider Electric CK222 is recommended.

Note 3: EIA(RS)485 is polarity sensitive, with pin 4 positive (+) and pin 7 negative (-).

Note 4: The K-Bus protocol can be connected to a PC via a KITZ101 or 102.

Note 5: It is recommended that a 2-core screened cable be used. To avoid exceeding the second communications port flash clearances it is recommended that the length of cable between the port and the communications equipment should be less than 300 m. This length can be increased to 1000 m or 200nF total cable capacitance if the communications cable is not laid in close proximity to high current carrying conductors. The cable screen should be earthed at one end only.

A typical cable specification would be:

Each core:	16/0.2 mm copper conductors PVC insulated
Nominal conductor area:	0.5 mm2 per core
Screen:	Overall braid, PVC sheathed

6.10 Protective conductor (earth) connection

Every relay must be connected to the local earth bar using the M4 earth studs in the bottom left hand corner of the relay case. The minimum recommended wire size is 2.5 mm2 and should have a ring terminal at the relay end. Due to the limitations of the ring terminal, the maximum wire size that can be used for any of the medium or heavy duty terminals is 6.0 mm2 per wire. If a greater cross-sectional area is required, two parallel connected wires, each terminated in a separate ring terminal at the relay, or a metal earth bar could be used.

Note: To prevent any possibility of electrolytic action between brass or copper earth conductors and the rear panel of the relay, precautions should be taken to isolate them from one another. This could be achieved in a number of ways, including placing a nickel-plated or insulating washer between the conductor and the relay case, or using tinned ring terminals.

7 ANALOGUE INPUTS

The MiCOM P241/2 relay has 3 phase current inputs, one earth current input and 3 phase voltage inputs. The P243 has 6 phase current inputs, one earth current input and 3 phase voltage inputs.

7.1 CTs inputs for the phase and earth currents

The phase and earth current inputs can be set independently to 1 A or 5 A. The choice of the CTs ratio is done in the menu 'CT and VT ratios' of the MiCOM P24x relay.

The following figures present different configurations of CTs and VTs : only the 5 A current inputs are indicated.

Connections of the earth and phase cts must be done in accordance with the ct ratio selected in the "ct and vt ratios" menu.

Each time a change is realized, the relay must be reset and then restarted (power supply must be cut off and then restored).

7.1.1 3 CTs and core balance CT configuration

This configuration is a classical configuration, P241 example:

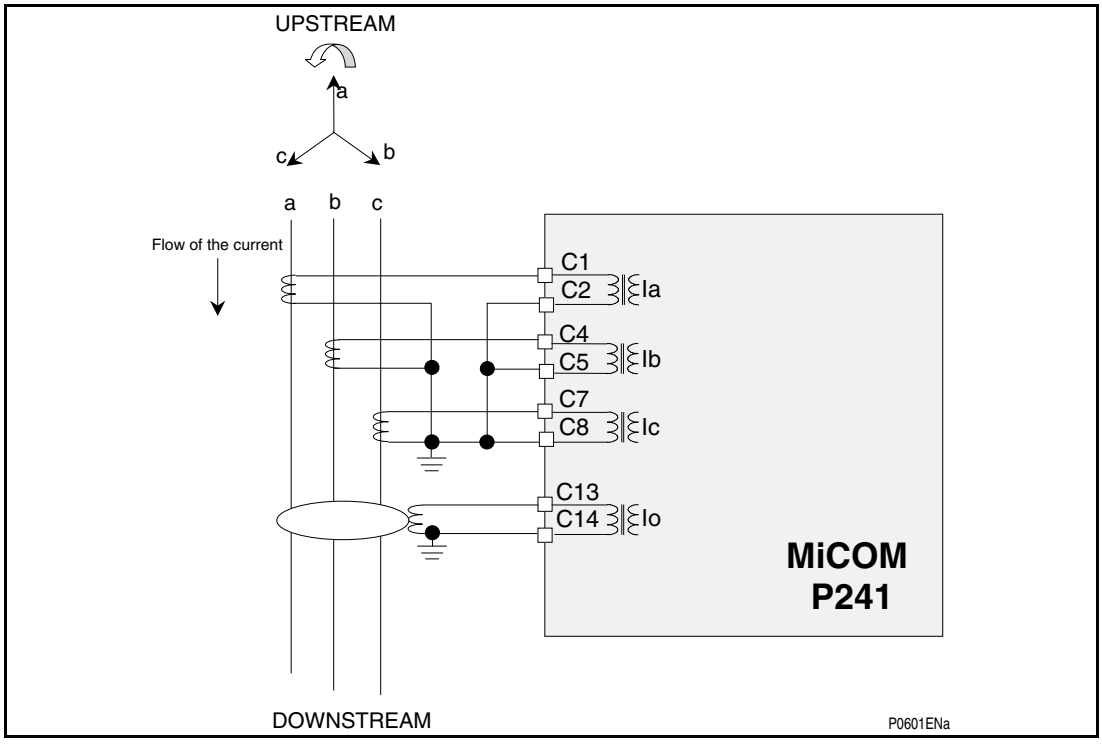

Figure 3: 3 CT and core balance CT configuration

IN

7.1.2 3CTs configuration

Due to this configuration, the earth current input is the arithmetic sum of the 3 phase currents. This configuration is mainly used when a core balanced CT is not available.
P241 example :

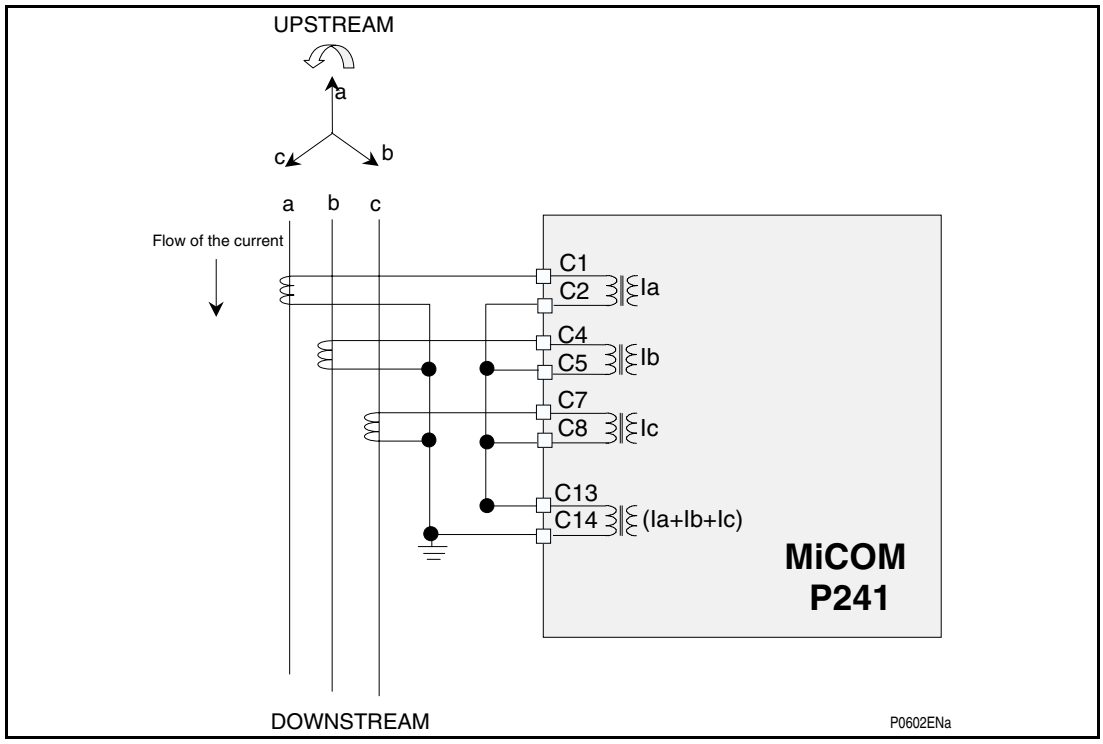

Figure 4: 3 CT configuration

It is possible to realize the summation of the 3 phase currents internally. The protection function is called **Derived E/F** and must be selected in the **CONFIGURATION** menu.

7.1.3 2 CTs and core balance CT configuration

The proper configuration for the use of 2 CTs to detect phase current is shown below, P241 example :

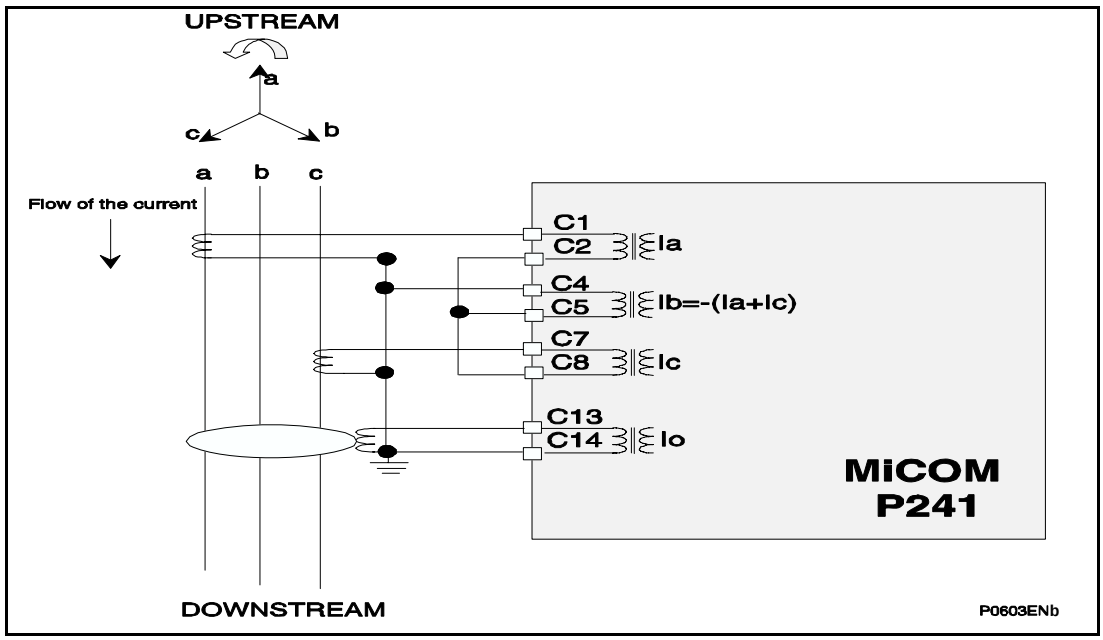

Figure 5: 2 CTs and core balance CT configuration

IN

This type of configuration will create a negative phase sequence current in case of unbalanced conditions due to an external fault. The protection functions "thermal overload" and "neg.SEq.O/C" will then be affected by this configuration, since they take into account the negative phase sequence current component.

7.2 VT inputs

Three configurations can be used for the phase voltage inputs : the choice of the configuration is realized in the **CT AND VT RATIOS – VT connecting mode** menu of the MiCOM P24x relay.

7.2.1 Three phase VTs configuration

P241 example :

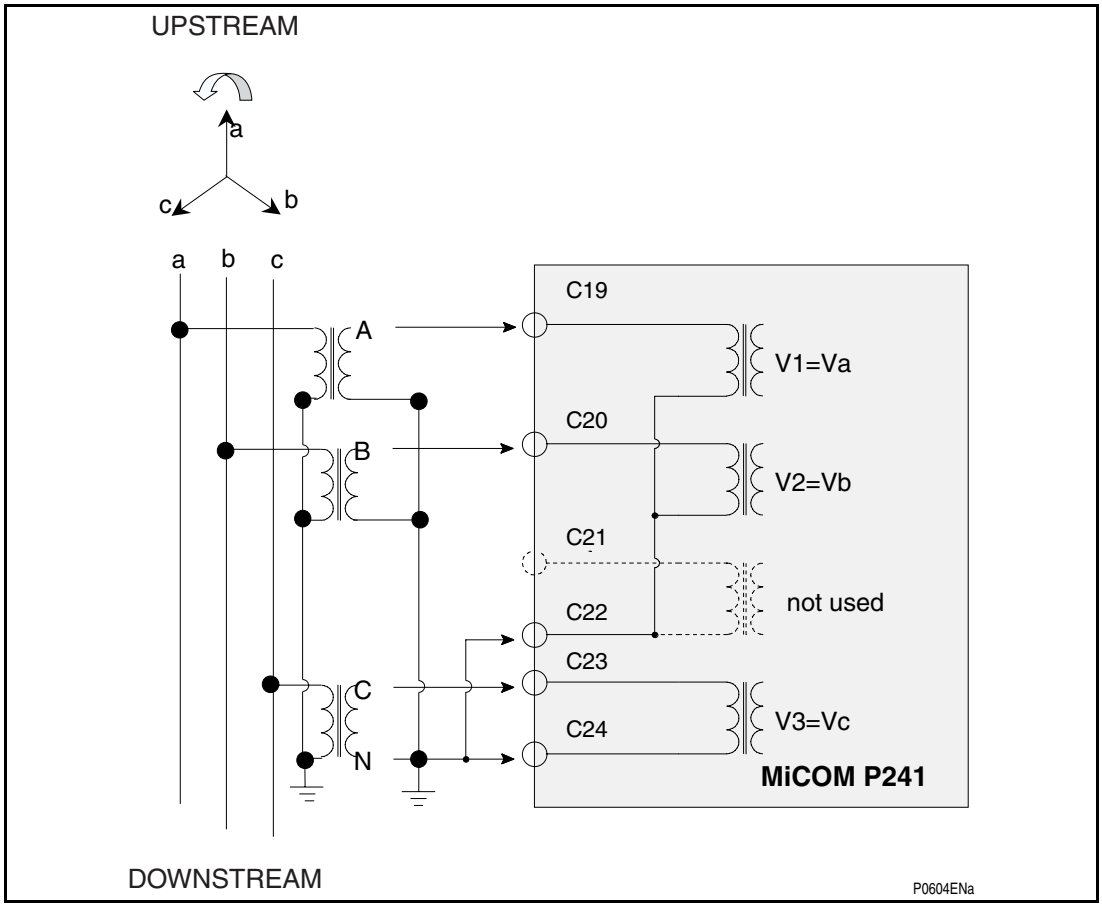

Figure 6: Three phase VTs configuration

7.2.2 Two phase VTs and residual VT configuration

P241 example :

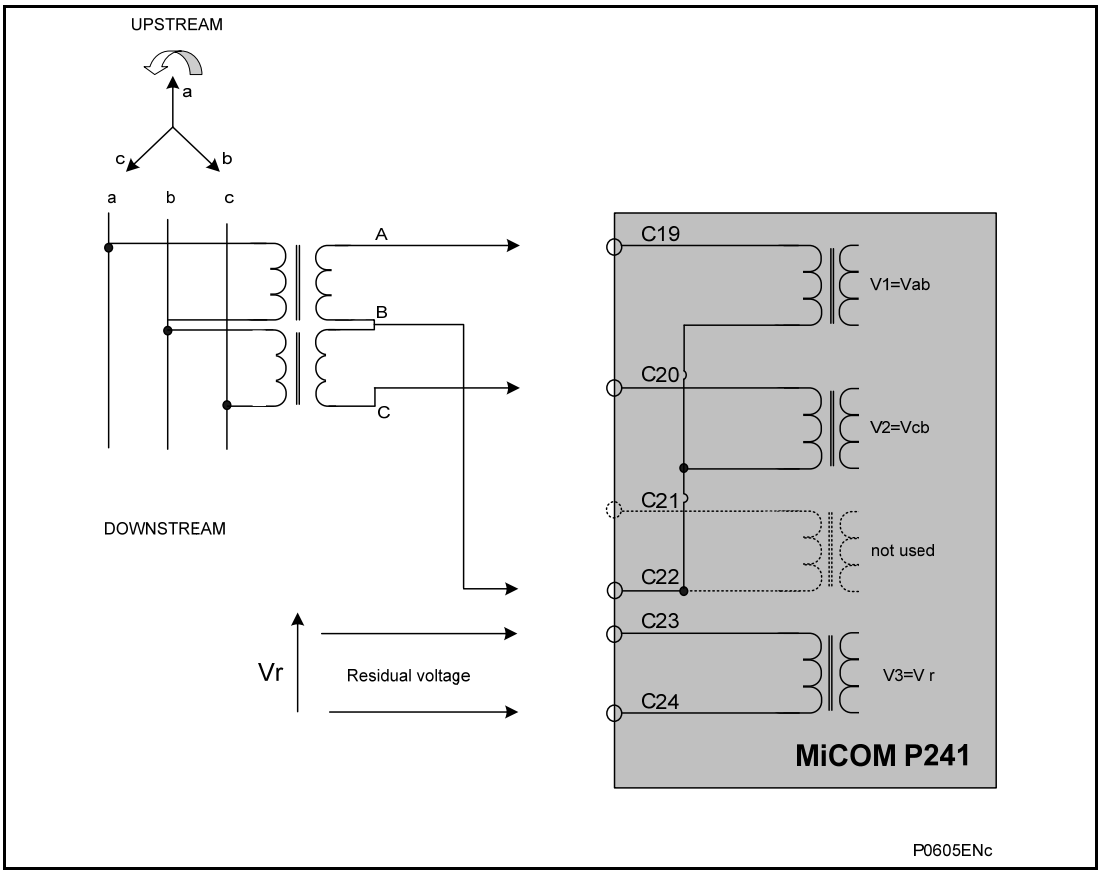

Figure 7: Two phase VTs and residual VT configuration

7.2.3 Two Phase VTs and Anti-Backspin (Vremanent phase-phase) VT configuration

P241 example:

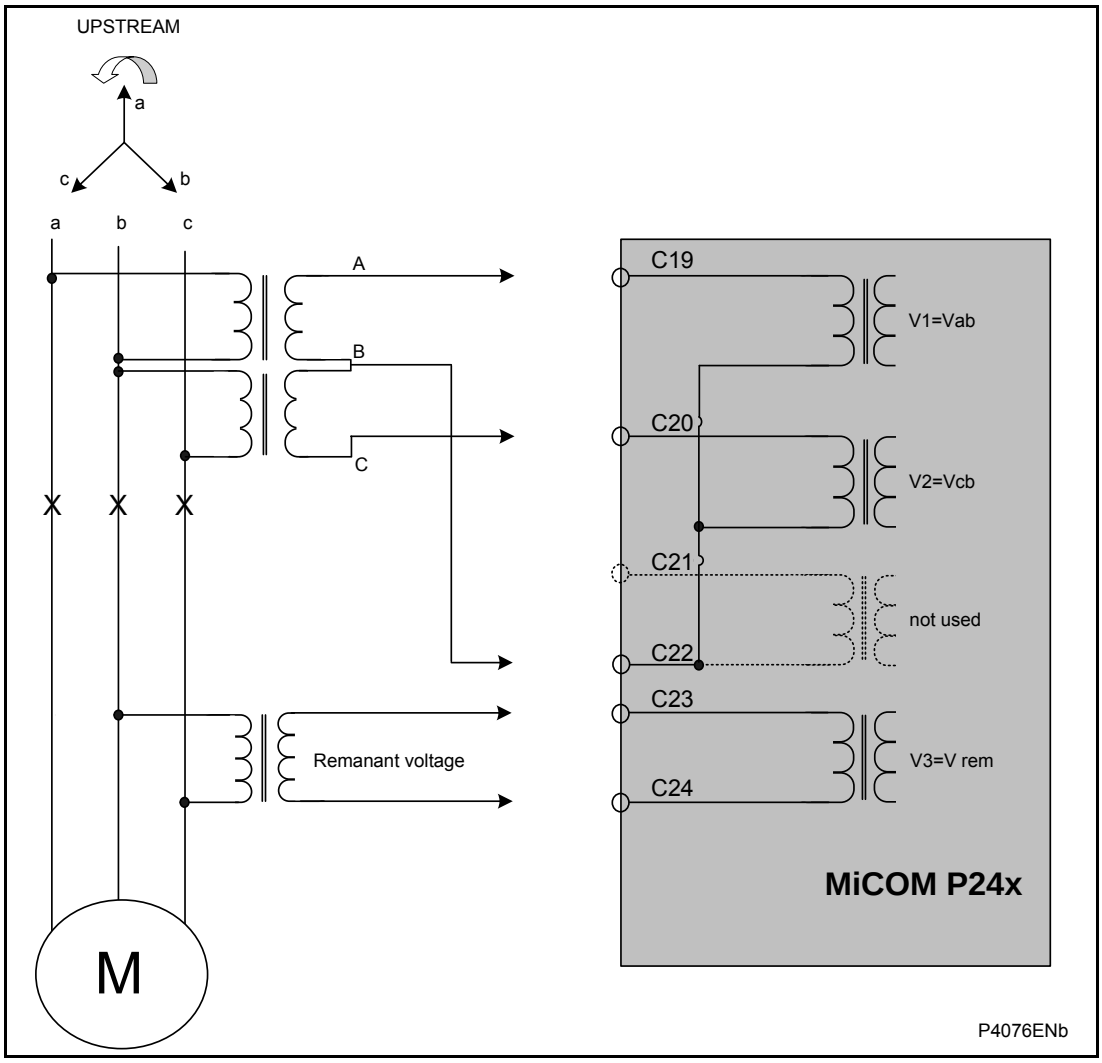

Figure 8: Two phase VTs and Anti-Backspin (remanent phase-phase) VT configuration

Note: In order to measure the motor generated voltage when under backspin condition (back emf), the VT used for remanant voltage measurement should be connected upstream the motor and downstream the motor CB.

8 P24X CASE DIMENSIONS

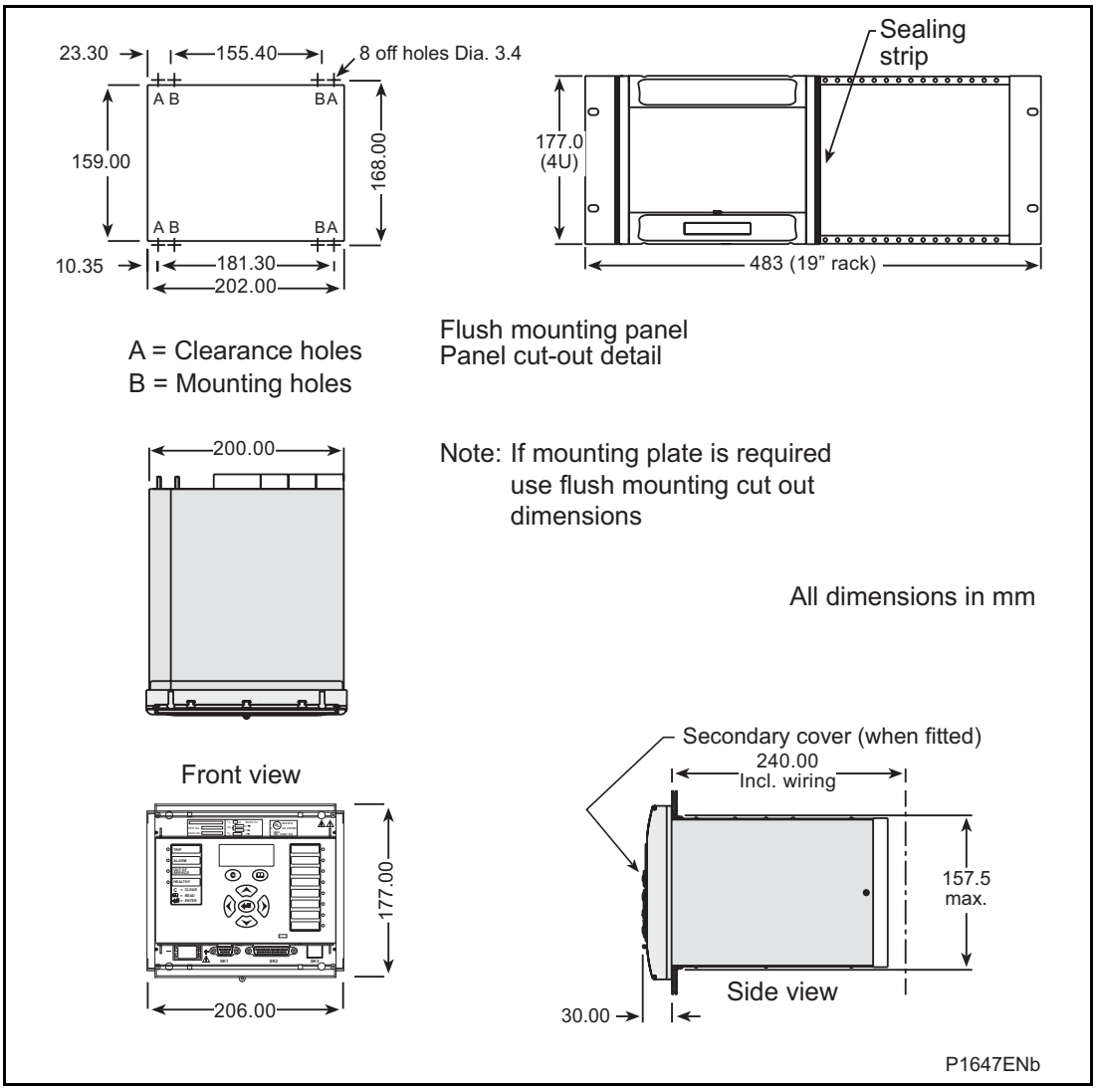

Figure 9: P241 case dimensions (40TE case)

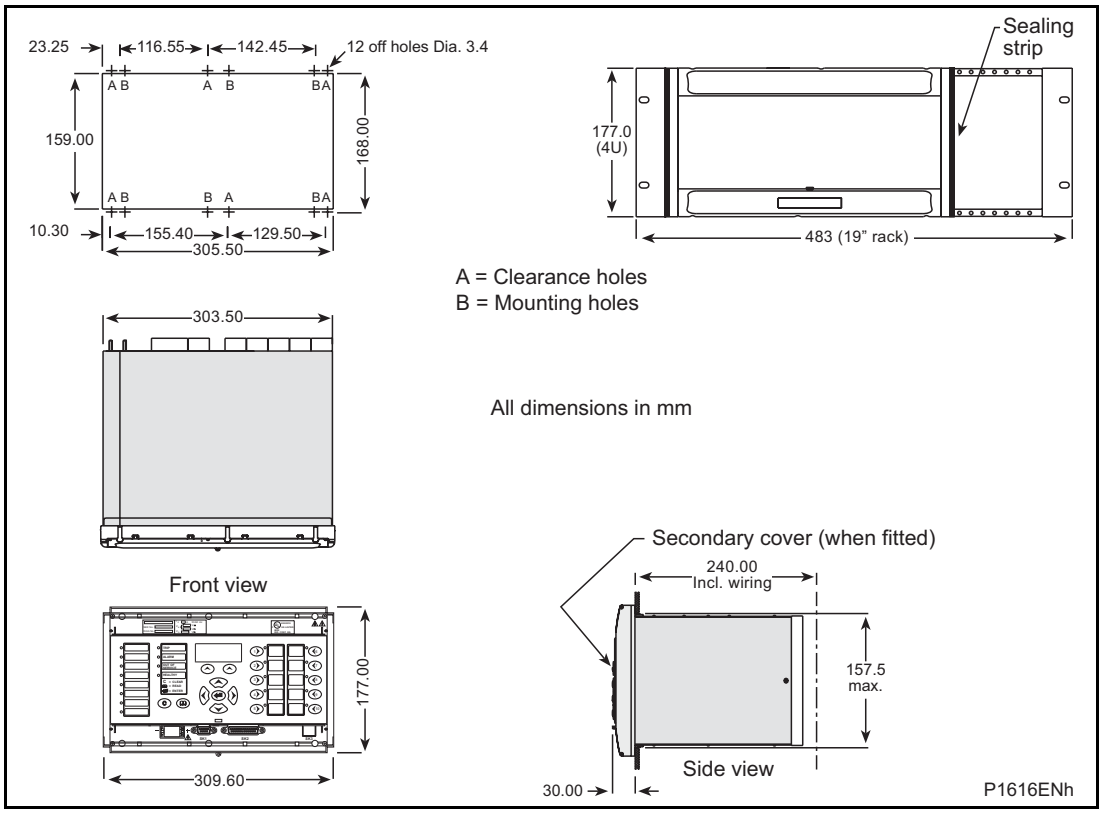

Figure 10: P242 case dimensions (60TE case)

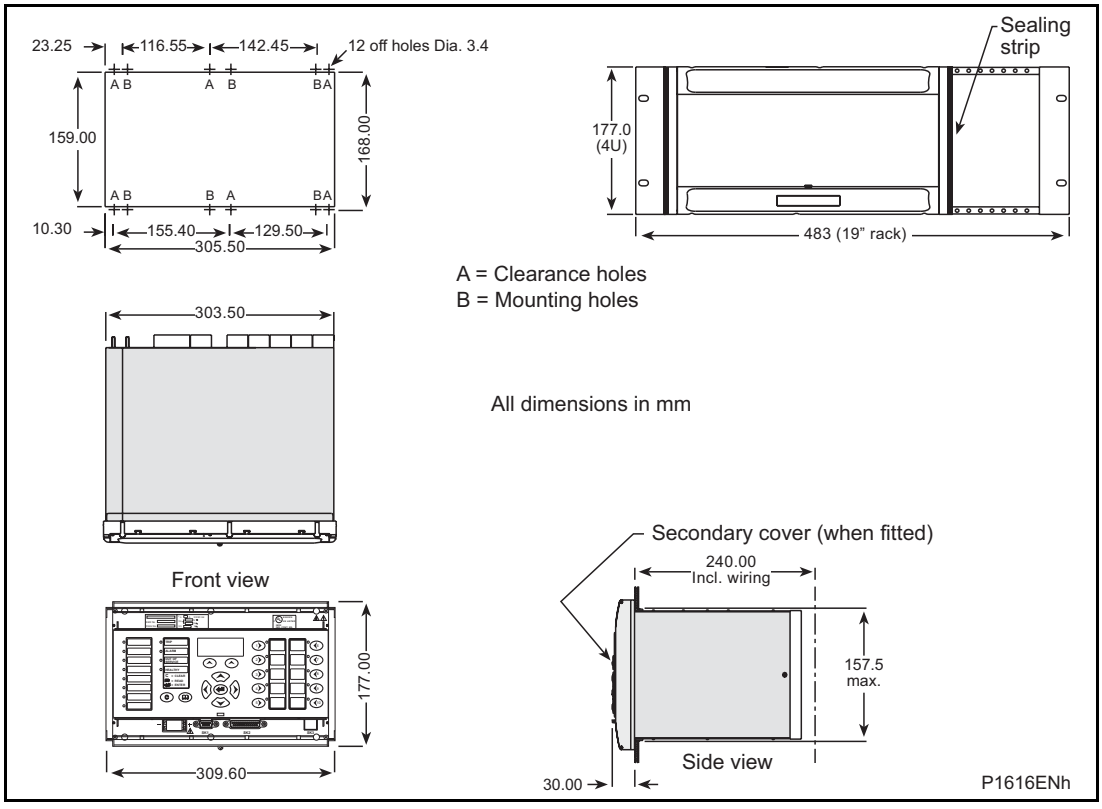

Figure 11: P243 case dimensions (80TE case)

IN

9 P24X EXTERNAL CONNECTION DIAGRAMS

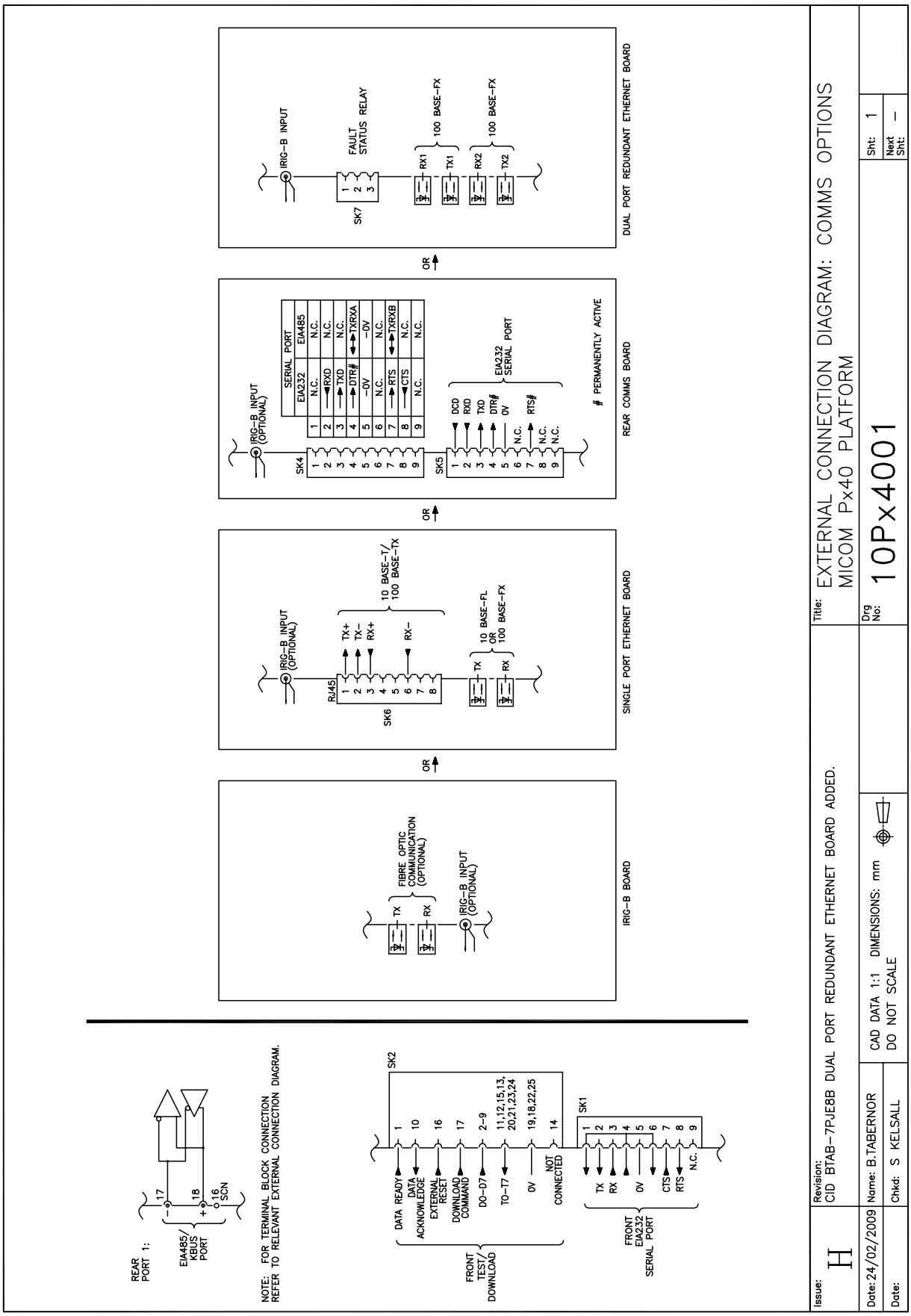

Figure 12: Comms. options MiCOM Px40 platform

IN

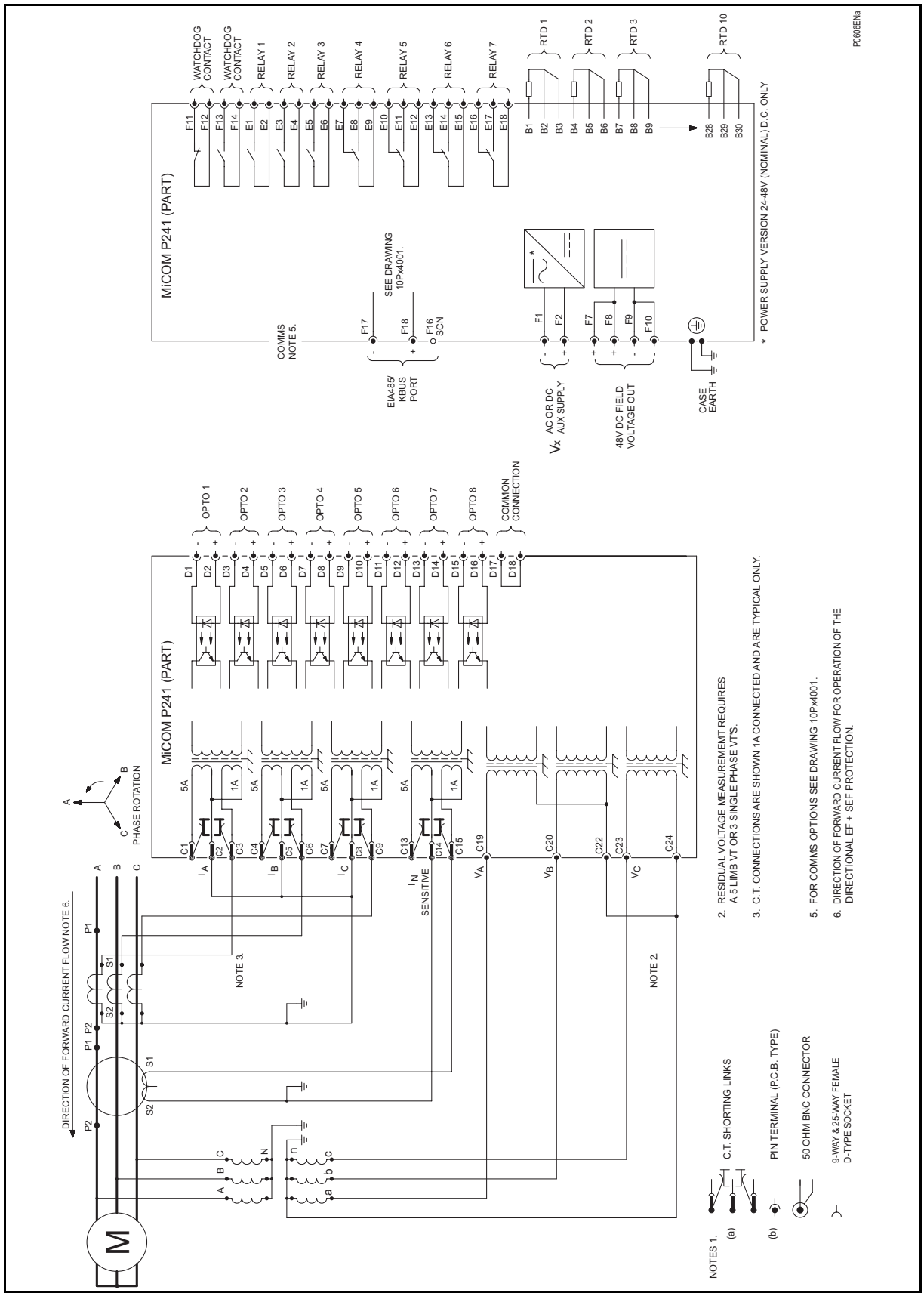

Figure 13: P241 external connection diagram – 3VTs connection + RTD option

IN

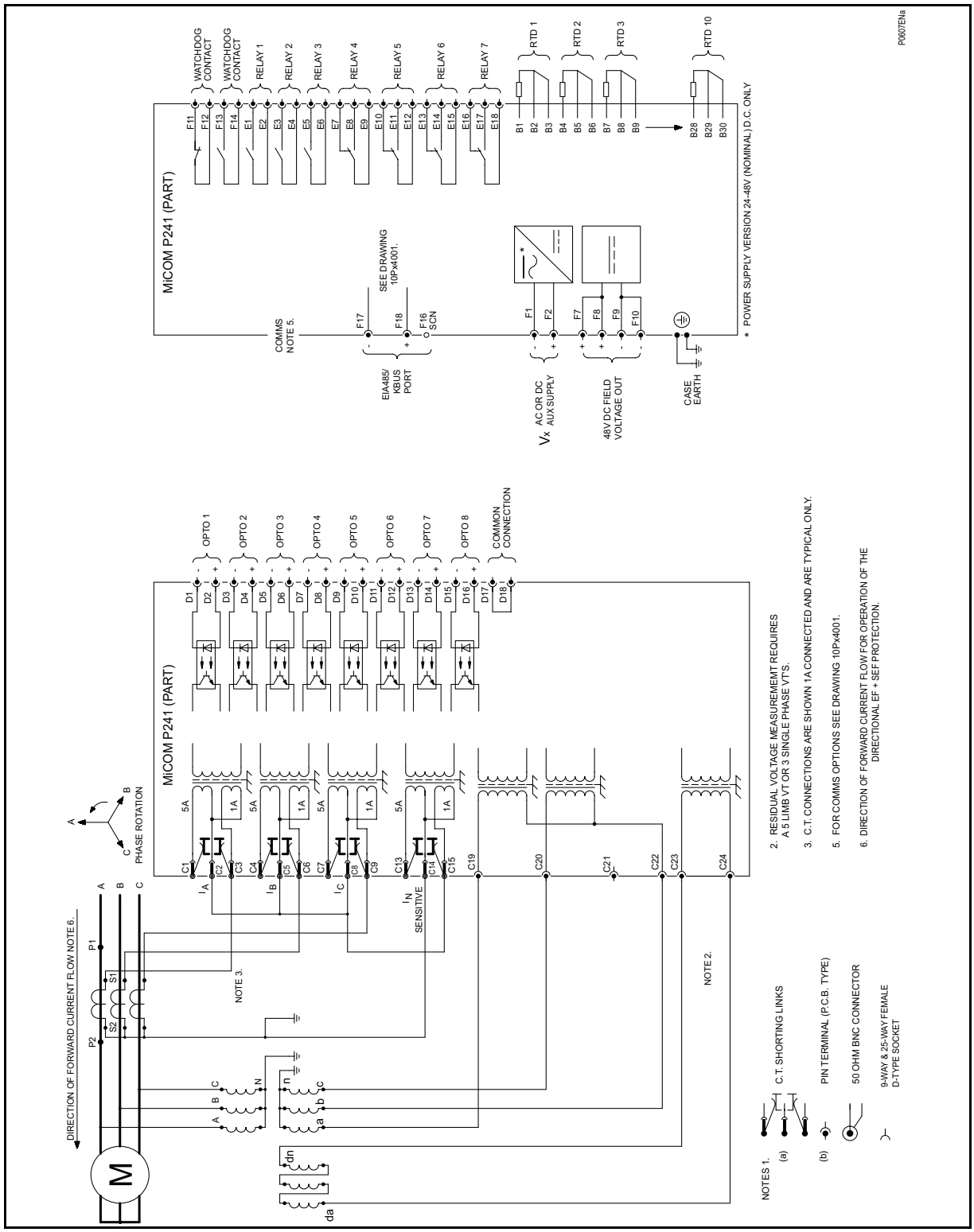

Figure 14: P241 external connection diagram – 2VTs and residual connection + RTD option

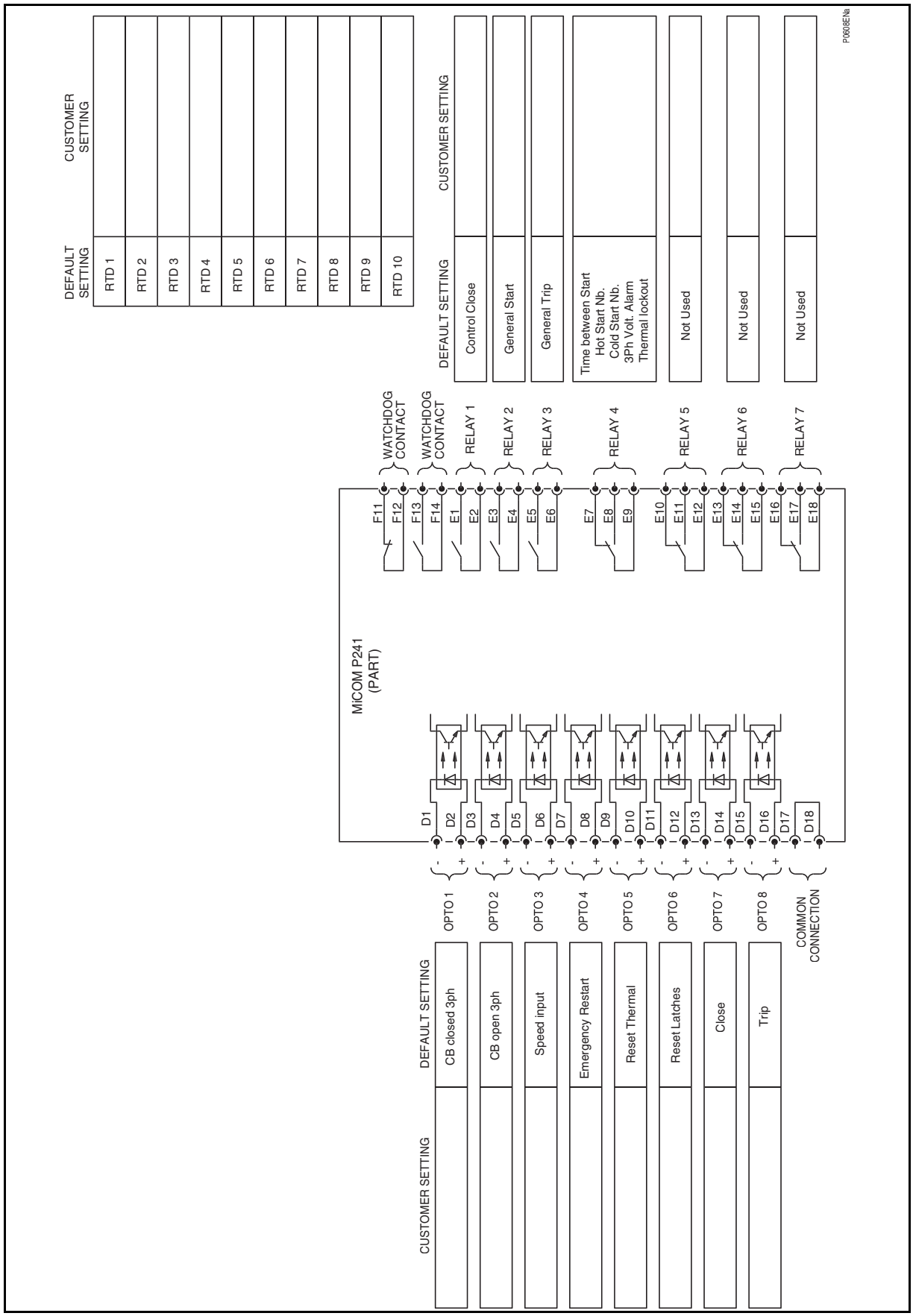

Figure 15: P241 external connection diagram – RTD option

IN

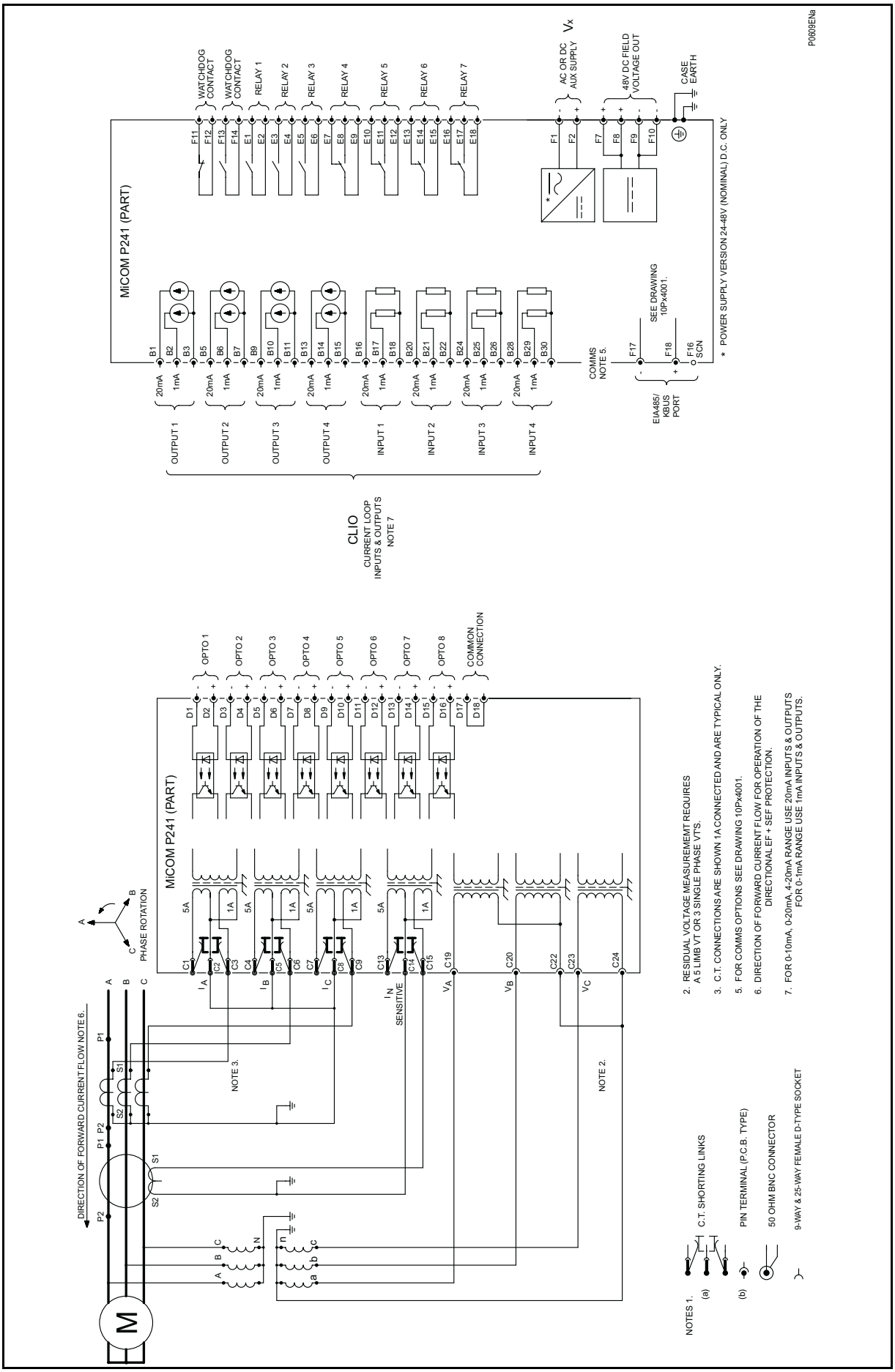

Figure 16: P241 external connection diagram – 3VTs connection + CLIO option

IN

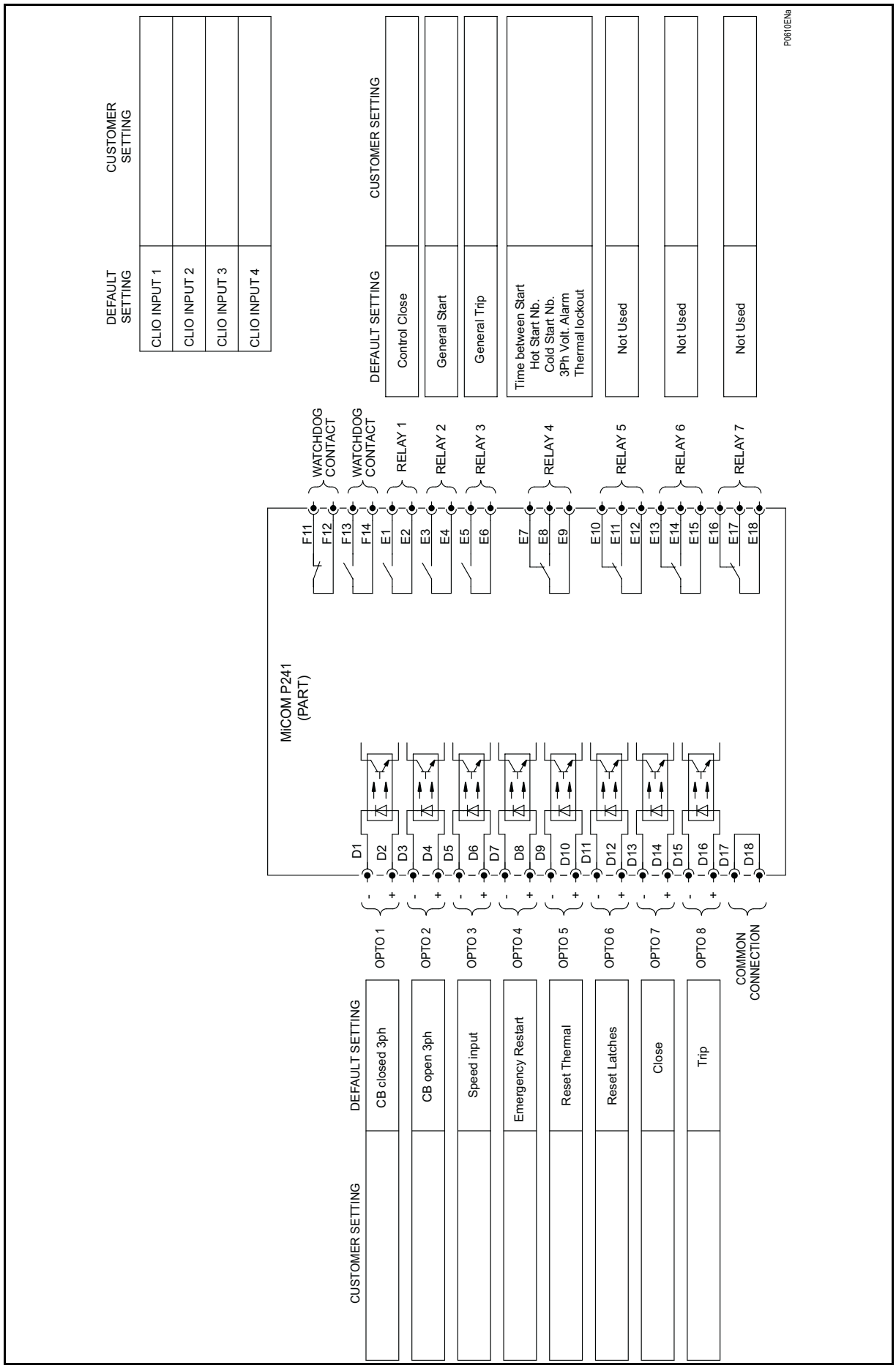

Figure 17: P241 external connection diagram – CLIO option

IN

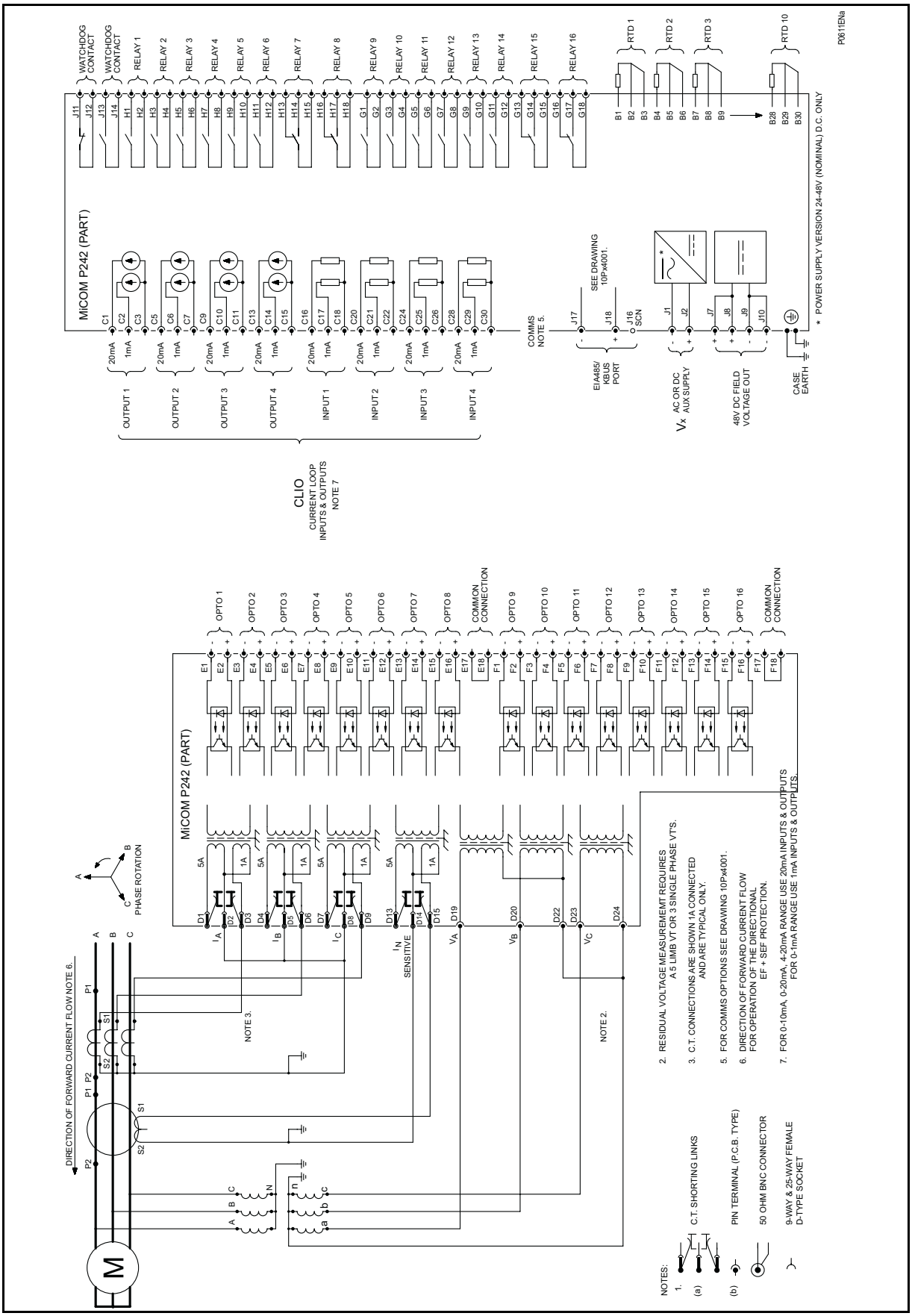

Figure 18: P242 external connection diagram – 3VTs connection + RTD + CLIO options

IN

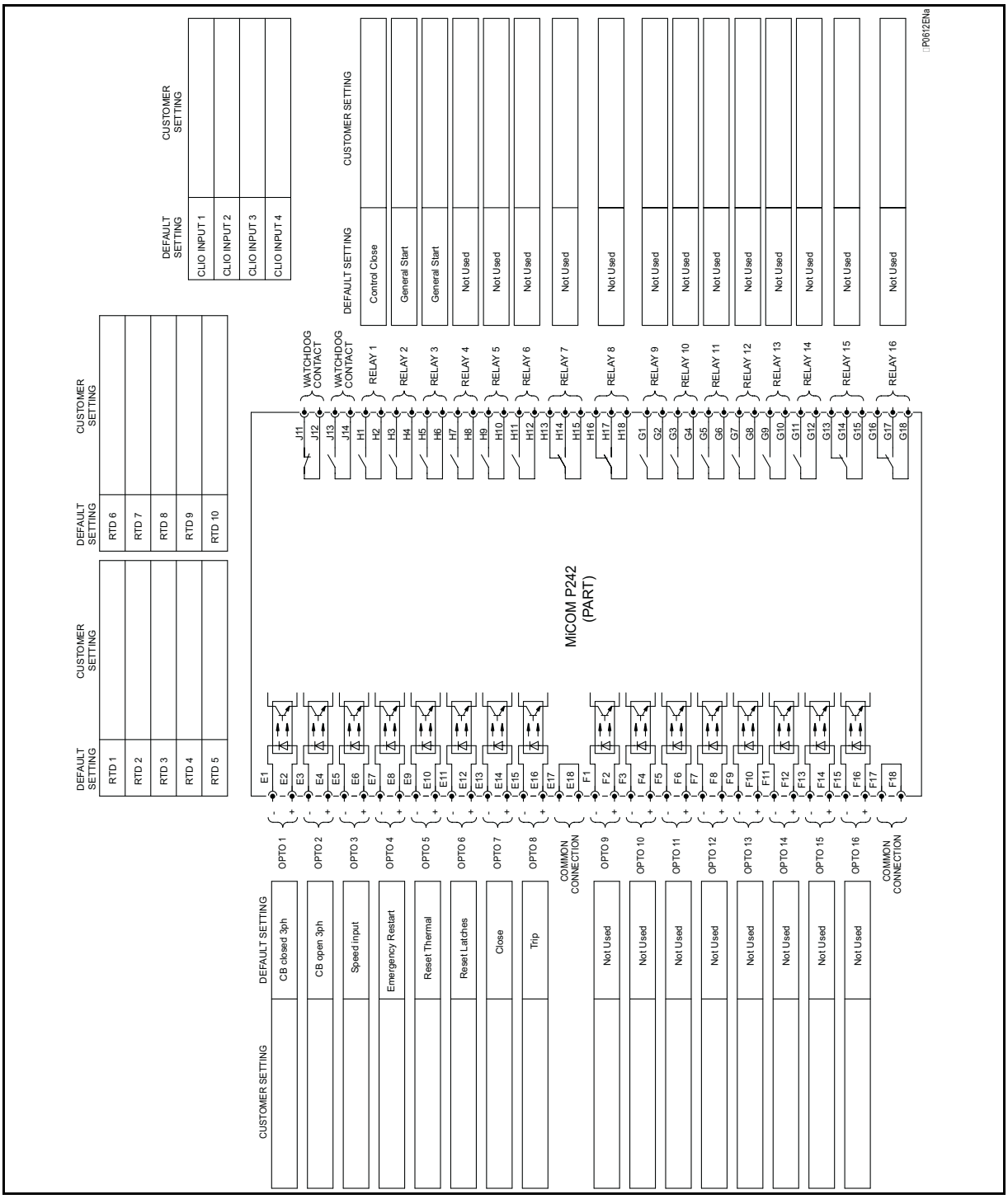

Figure 19: P242 external connection diagram – 3VTs connection + RTD + CLIO options

IN

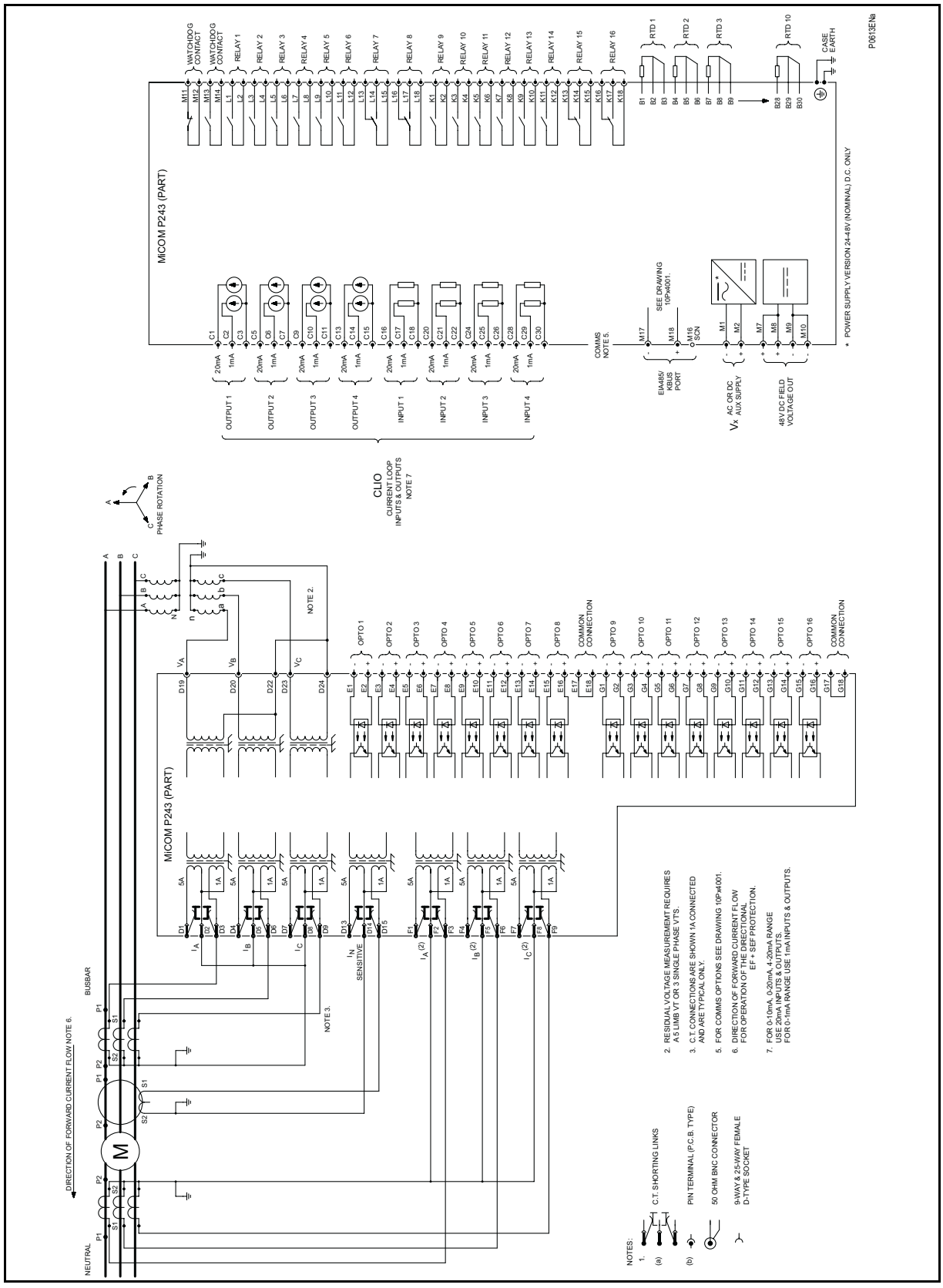

Figure 20: P243 external connection diagram – 3VTs connection + RTD + CLIO options – biased differential [87M]

IN

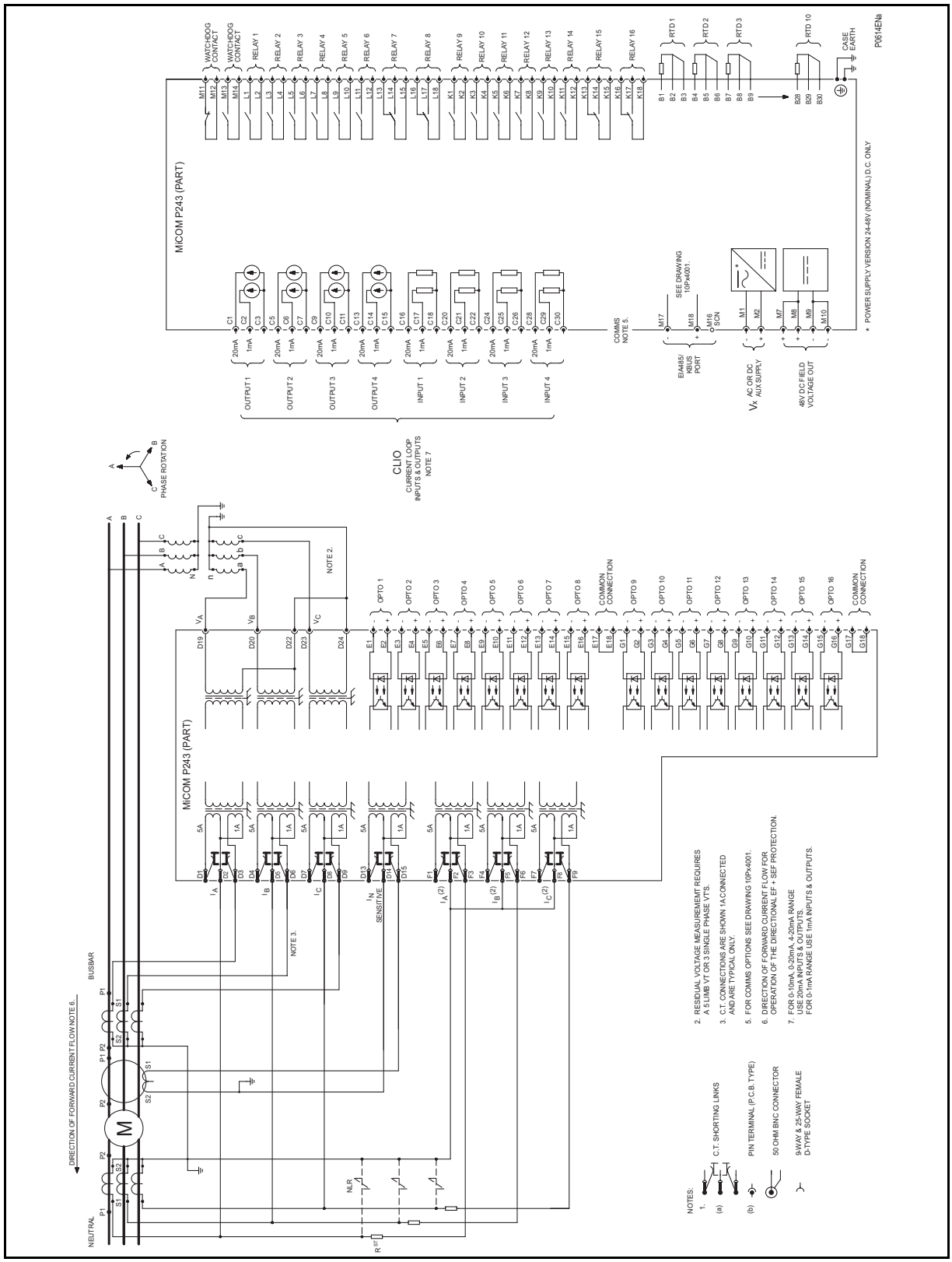

Figure 21: P243 external connection diagram – 3VTs connection + RTD + CLIO – high impedance differential [87M]

IN

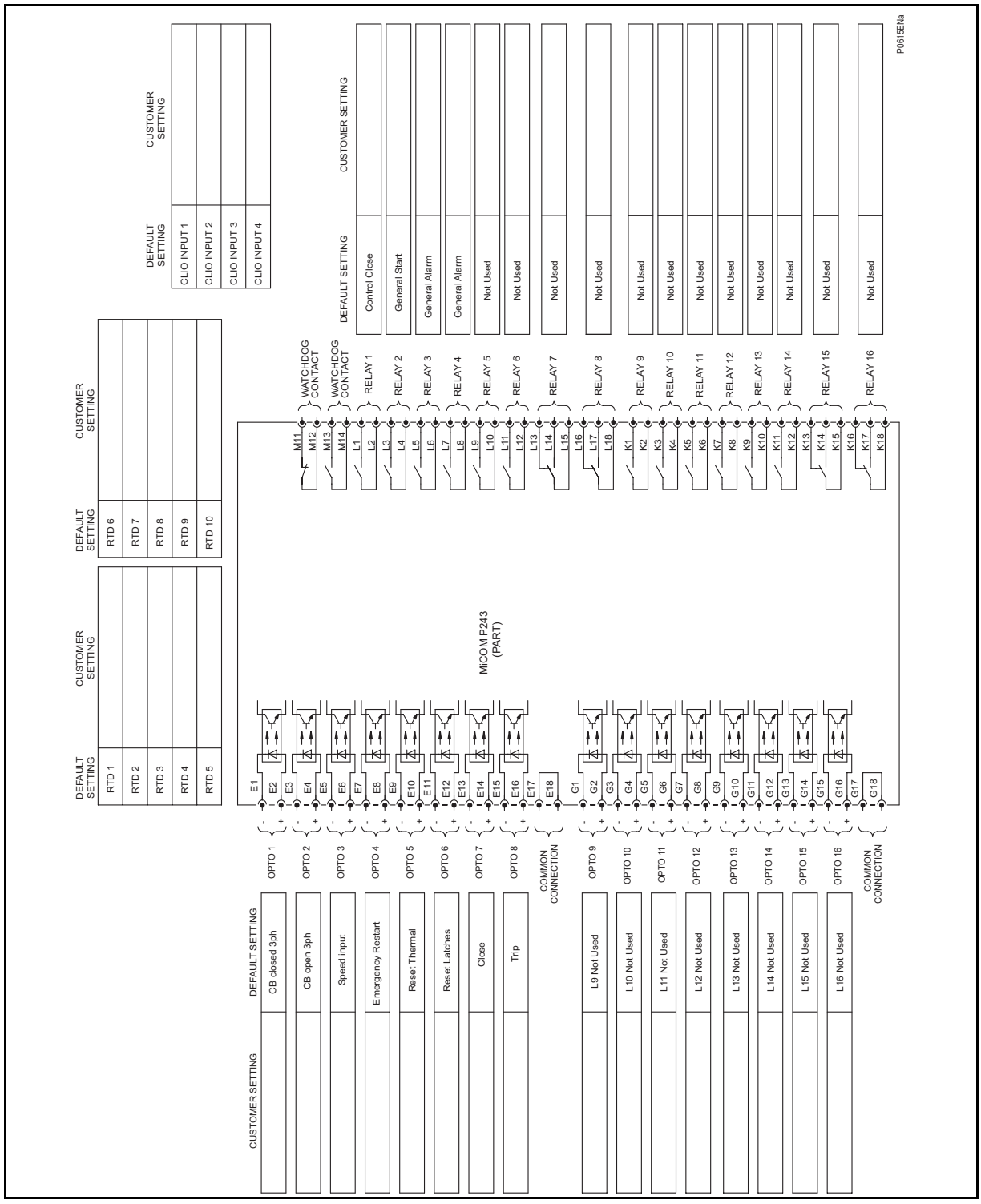

Figure 22: P243 external connection diagram – 3VTs connection + RTD + CLIO options

IN

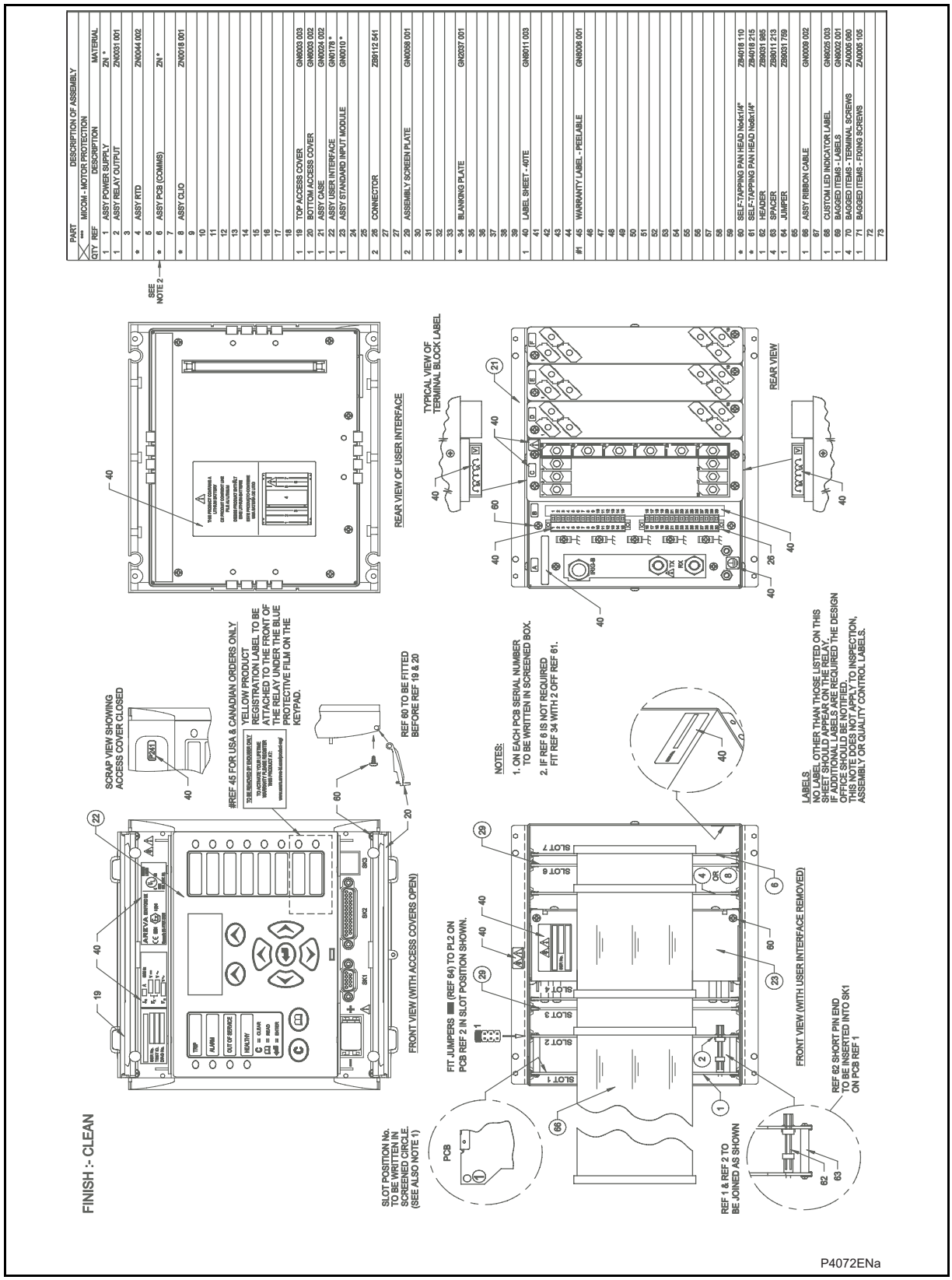

Figure 23: Assembly P241 motor protection relay (40TE) (8 I/P & 7 O/P with optional RTD & CLIO)

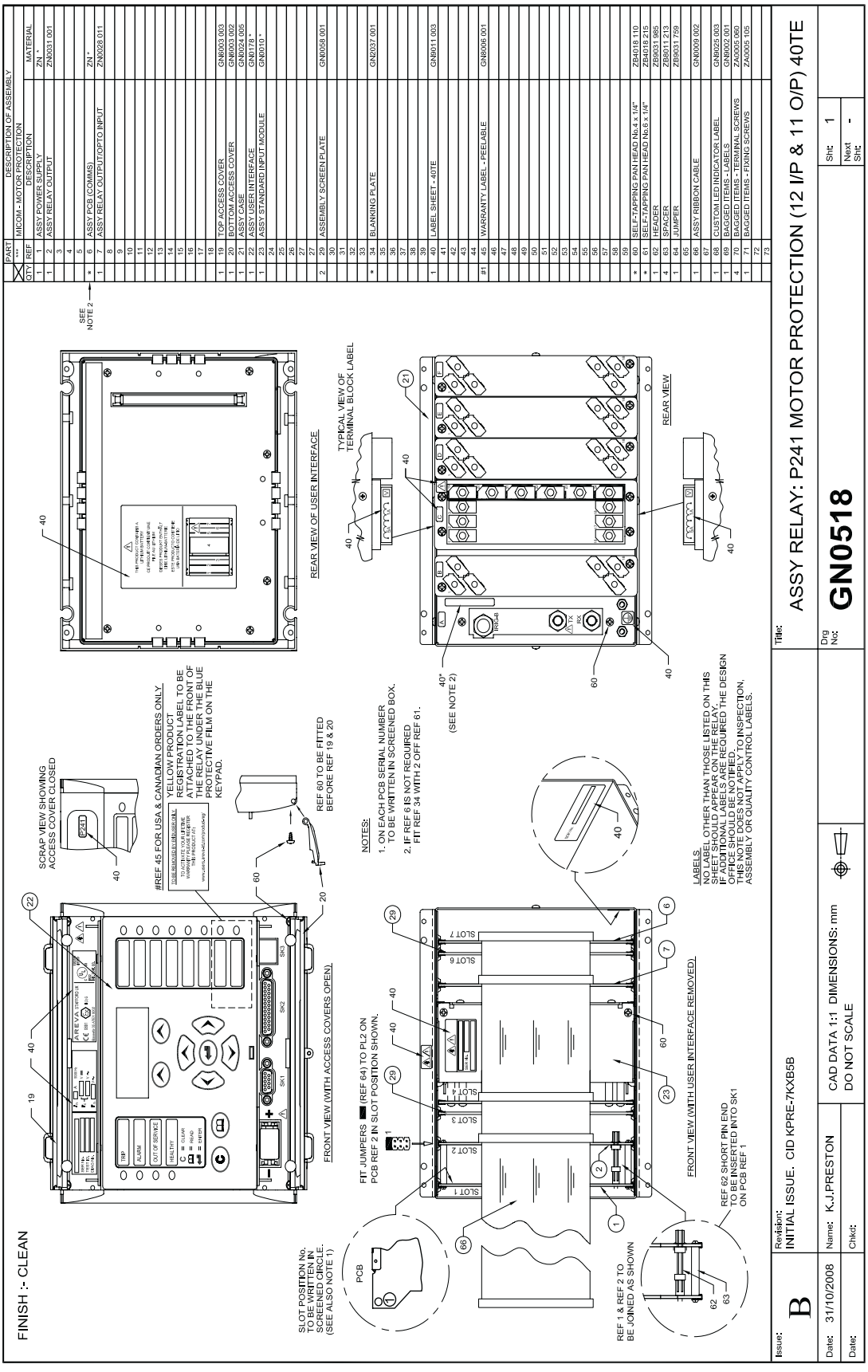

PART		DESCRIPTION OF ASSEMBLY	
QTY	***	MICOM - MOTOR PROTECTION	MATERIAL
QTY	REF	DESCRIPTION	
1	1	ASSY POWER SUPPLY	ZN *
1	2	ASSY RELAY OUTPUT	ZN0031 001
	3		
	4		
	5		
*	6	ASSY PCB (COMMS)	ZN *
1	7	ASSY RELAY OUTPUT/OPTO INPUT	ZN0028 011
	8		
	9		
	10		
	11		
	12		
	13		
	14		
	15		
	16		
	17		
1	19	TOP ACCESS COVER	GN8003 003
1	20	BOTTOM ACCESS COVER	GN8003 002
1	21	ASSY CASE	GN0024 005
1	22	ASSY USER INTERFACE	GN0178 *
1	23	ASSY STANDARD INPUT MODULE	GN0010 *
	24		
	25		
	26		
	27		
2	29	ASSEMBLY SCREEN PLATE	GN8058 001
	30		
	31		
	32		
	33		
*	34	BLANKING PLATE	GN2037 001
	35		
	36		
	37		
	38		
	39		
1	40	LABEL SHEET - 40TE	GN8011 003
	41		
	42		
	43		
	44		
#1	45	WARRANTY LABEL - PEELABLE	GN8006 001
	46		
	47		
	48		
	49		
	50		
	51		
	52		
	53		
	54		
	55		
	56		
	57		
	58		
	59		
*	60	SELF-TAPPING PAN HEAD No.4 x 1/4"	ZB4018 110
*	61	SELF-TAPPING PAN HEAD No.6 x 1/4"	ZB4018 215
1	62	HEADER	ZB9031 985
4	63	SPACER	ZB9011 213
1	64	JUMPER	ZB9031 759
	65		
1	66	ASSY RIBBON CABLE	GN0009 002
	67		
1	68	CUSTOM LED INDICATOR LABEL	GN8025 003
1	69	BAGGED ITEMS - LABELS	GN8002 011
4	70	BAGGED ITEMS - TERMINAL SCREWS	ZA0005 060
1	71	BAGGED ITEMS - FIXING SCREWS	ZA0005 105
	72		
	73		

Figure 24: Assembly drawing for P241 with optional 12 I/P and 11 O/P

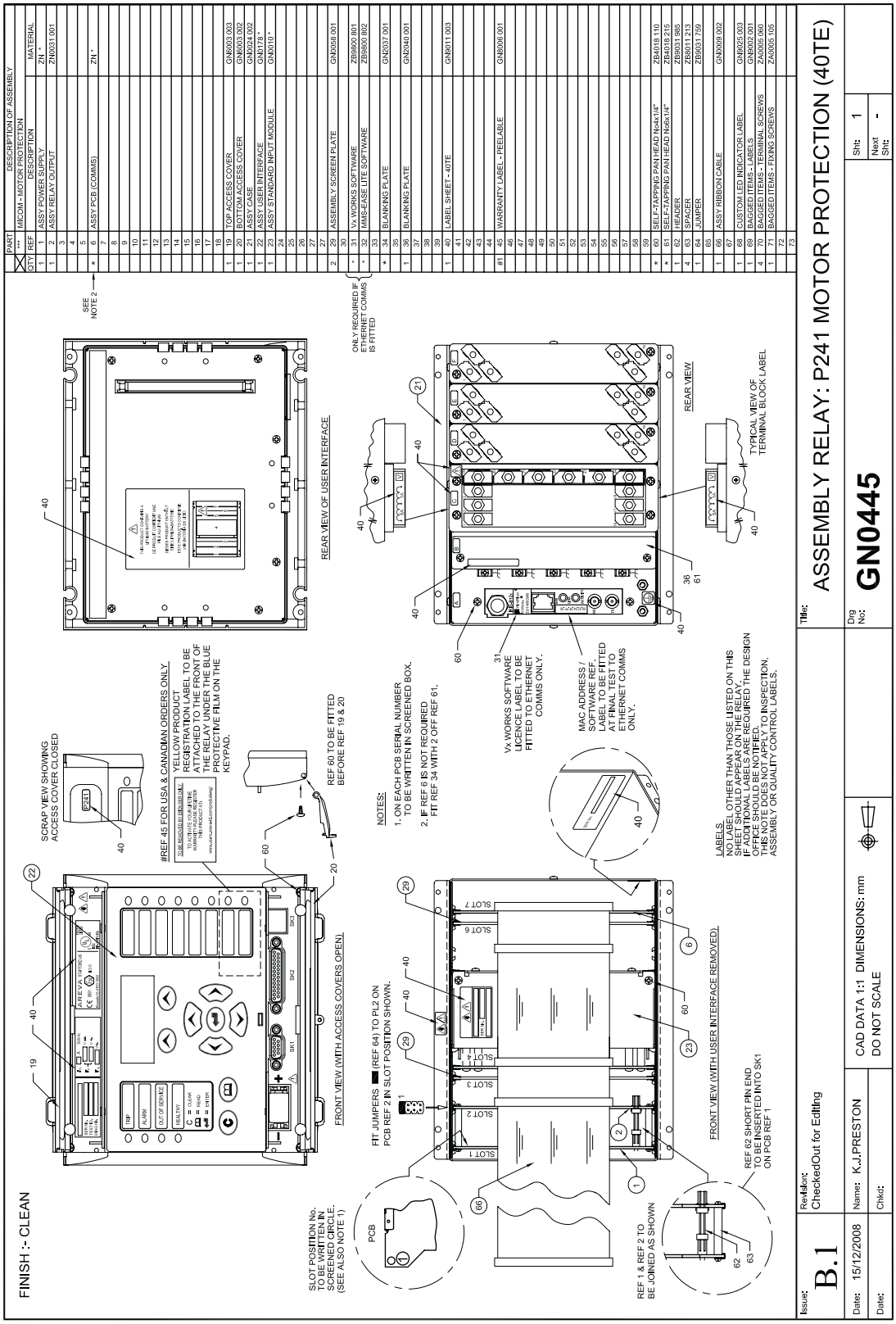

QTY	REF	DESCRIPTION	MATERIAL
1	1	ASSY POWER SUPPLY	ZN *
1	2	ASSY RELAY OUTPUT	ZN0031 001
	3		
	4		
	5		
*	6	ASSY PCB (COMMS)	ZN *
	7		
	8		
	9		
	10		
	11		
	12		
	13		
	14		
	15		
	16		
	17		
	18		
1	19	TOP ACCESS COVER	GN6003 003
1	20	BOTTOM ACCESS COVER	GN6003 002
1	21	ASSY CASE	GN0024 002
1	22	ASSY USER INTERFACE	GN0178 *
1	23	ASSY STANDARD INPUT MODULE	GN0010 *
	24		
	25		
	26		
	27		
	27		
2	29	ASSEMBLY SCREEN PLATE	GN0058 001
	30		
*	31	Vx WORKS SOFTWARE	ZB9800 801
*	32	MMS-EASE LITE SOFTWARE	ZB9800 802
	33		
*	34	BLANKING PLATE	GN2037 001
	35		
1	36	BLANKING PLATE	GN2040 001
	37		
	38		
	39		
1	40	LABEL SHEET - 40TE	GN9011 003
	41		
	42		
	43		
	44		
#1	45	WARRANTY LABEL - PEELABLE	GN8006 001
	46		
	47		
	48		
	49		
	50		
	51		
	52		
	53		
	54		
	55		
	56		
	57		
	58		
	59		
*	60	SELF-TAPPING PAN HEAD No4x1/4"	ZB4018 110
*	61	SELF-TAPPING PAN HEAD No6x1/4"	ZB4018 215
1	62	HEADER	ZB9031 985
4	63	SPACER	ZB8011 213
1	64	JUMPER	ZB9031 759
	65		
1	66	ASSY RIBBON CABLE	GN0009 002
	67		
1	68	CUSTOM LED INDICATOR LABEL	GN8025 003
1	69	BAGGED ITEMS - LABELS	GN9002 001
4	70	BAGGED ITEMS - TERMINAL SCREWS	ZA0005 060
1	71	BAGGED ITEMS - FIXING SCREWS	ZA0005 105
	72		
	73		

Figure 25: Assembly drawing for P241 with optional IEC 61850 (40 TE)

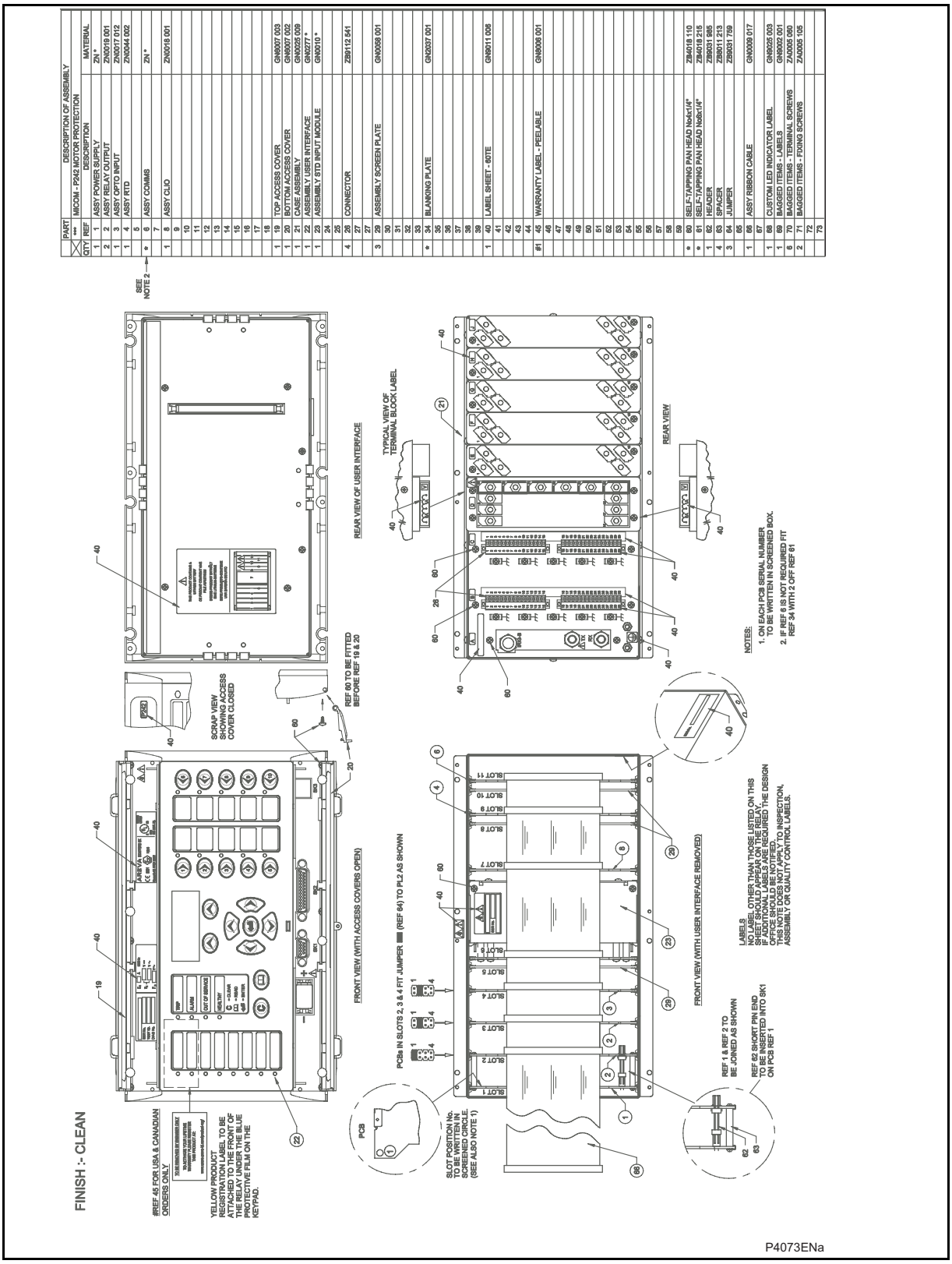

Figure 26: Assembly P242 motor protection relay (60TE) (16 I/P & 16 O/P with optional RTD & CLIO)

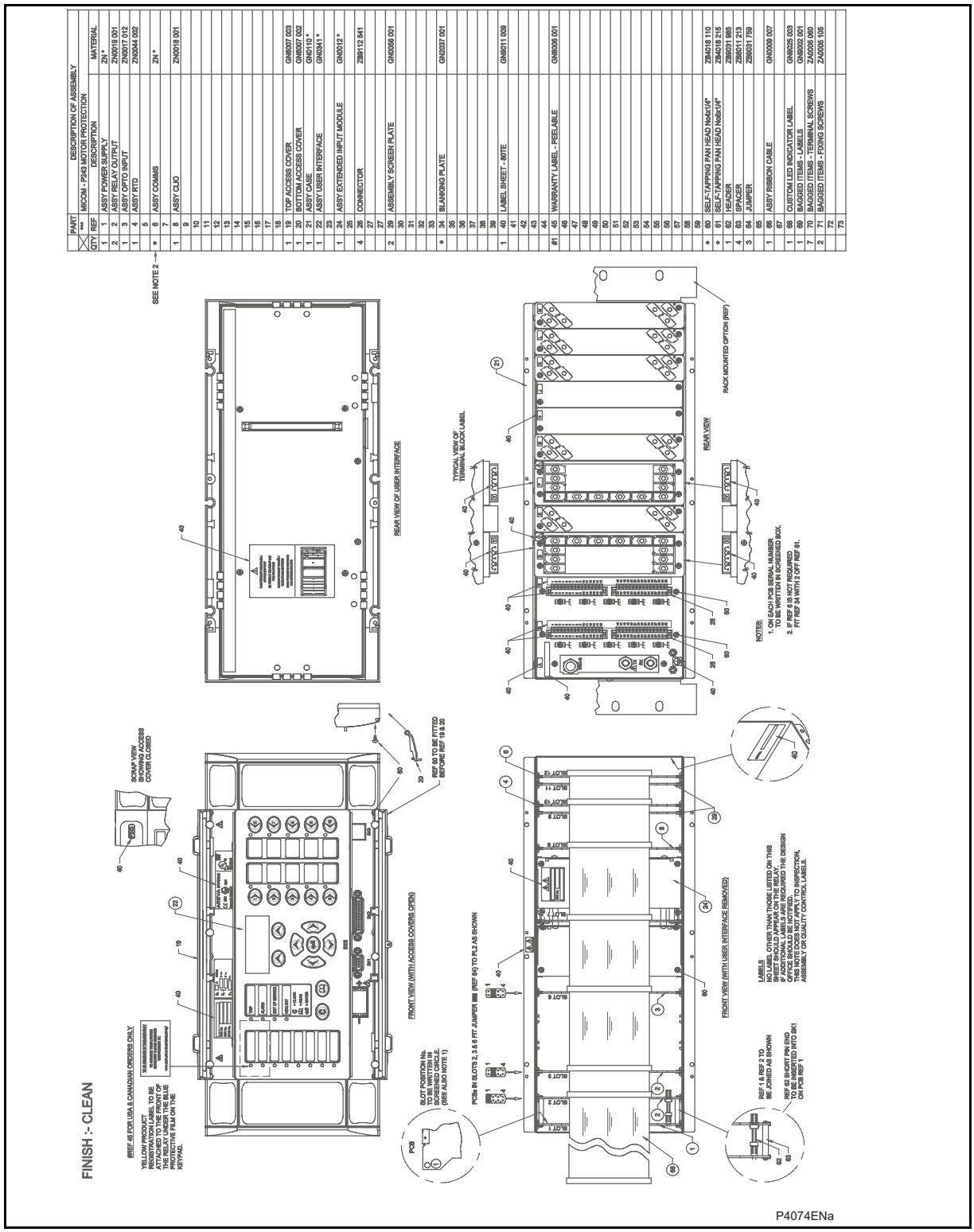

Figure 27: Assembly P243 motor protection relay (80TE) (16 I/P & 16 O/P with optional RTD & CLIO)

FIRMWARE AND SERVICE MANUAL VERSION HISTORY

Date:	**24th November 2009**
Hardware suffix:	**J (P241) K (P242/P243)**
Software version:	**57**
Connection diagrams:	**10P241xx (xx = 01 to 02)**
	10P242xx (xx = 01)
	10P243xx (xx = 01)

VH

Relay type: P241/2/3/…						
Software version		**Hardware suffix**	**Original date of issue**	**Description of changes**	**S1 compatibility**	**Technical documentation**
Major	**Minor**					
A3.0 (00) P241 only		A	Jul1999	✓ Original issue of software	V2.09 or later	TG1.1555
A3.1 (00) P241 only		A	Jul1999	✓ Inclusion of momentary warning message on the user interface if there is an error correlating ambient air by RTD to the RTD number by the user ✓ Modification of texts in language file(.dfn) regarding "stall-rotor-start/run" and "RTD invalid conf" ✓ Resolved dependency of active group and it's relevant data during fault on MiCOM S1 ✓ Addition of cells and modbus addresses required by south park and SINCOR ✓ Alteration of platform task priorities to comply with common architecture. CO 50300.C0642 ✓ Resolved overflow problem in zero volt check to offset DC in system platform	V2.09 or later	TG1.1555

Relay type: P241/2/3/…						
A3.1(02) P241 only	A	A	Nov1999	✓ Resolved problem of asynchronomism between analog and digital channels on disturbance record (10 ms time shift was corrected) ✓ Resolved resetting RTD trip and alarm flags when RTD protection is disabled ✓ Resolved problem of filtering of some of the measured quantities in fault record column ✓ Minimum delay setting on loss of load protection function is changed and step size is reduced to 0.01 s (initially 0.1 s) ✓ Resolved problem of 3 phase power factor calculation ✓ Bug fix related to reset number of start ✓ Bug fix related to RTD trip counters ✓ Resolved problem of correlation of the motor running hours with mapping of opto CB closed ✓ Resolved problem of saving the fan number for VDEW in BBRAM (every 3 seconds) ✓ Resolved problem when disabling the commissioning test with the port status ✓ Resolved problem on default language for MiCOM S1 front port courier ✓ Resolved problem of not including accountability of secondary phase CT ratio in normalization table ✓ Corrected for calculation of thermal coefficient K	V2.09 or later	TG1.1555
	B	A	Nov1999	✓ Resolved problem of restoring state of trip LED after re-boot of relay ✓ Resolved incorrect dependency of emergency re-start cell on courier ✓ Resolved problem in the out-of-step element to take into account the sign of Sin(θ) as well ✓ Resolved problem in display of negative power factor	V2.09 or later	TG1.1555
	C	A	Dec1999	✓ Resolved incorrect dependency of emergency re-start cell on courier ✓ Resolved problem of 3 phase reactive power calculation	V2.09 or later	TG1.1555

Relay type: P241/2/3/…						
A3.1(04) P241 only	D	A	Jul2000	✓ Inclusion of two new cells to describe events: location and index ✓ Modification to modbus address for event recorder ✓ Modification of modbus address in "System Data" column ✓ Modification of modbus address in "RTD protection" column ✓ Data type G29 (three 16 bit registers) is replaced with data type G125 (short float IEEE754 floating point format) to avoid truncation error on measurements ✓ Default text is changed ✓ Modbus cell address dedicated to Ubc phase angle measurement is changed to 30266 ✓ Resolved problem of inappropriate measurement algorithm of reverse 3 phase active and reactive power measurement	V2.09 or later	TG1.1555
A3.1(07) P241 only Cont..	E	A		✓ Inclusion of filters for event recorder ✓ RDF file is modified ✓ Courier co-ordinates in the communication column are modified to relieve inconsistency in courier communication cell [0Exx] numbering	V2.09 or later	TG1.1555

Relay type: P241/2/3/…						
A4.0(03) **P241 only**		A	Feb2000	✓ Inclusion of an alarm threshold on energy measurement facility ✓ Inclusion of a second stage in short circuit protection function ✓ Inclusion of derived earth fault protection function ✓ Inclusion of a second stage in loss of load/under power protection function ✓ Inclusion of reverse power protection function ✓ Power supply regulator for RTD circuit is changed to 78M05 to establish secure supply ✓ Modification to RTD PCB (01-ZN001001 issue D) ✓ Resolved sequencing errors on platform RTD PCB ZN0010001 for acquisition of measurement at the boundary of 25 degree Celsius ✓ Resolved problem in a modbus method function to cater for data type G10 ✓ Resolved problem of restoring trip LED state after re-boot of relay ✓ Resolved initialization problem related to state of LEDs during the first boot of relay ✓ Resolved problem of text inversion in stall protection function	V2.09 or later	TG1.1555

Relay type: P241/2/3/…						
A4.0(06) **P241 only**	A	A	Oct2000	✓ Two new cells for describing events (location and index) are Added ✓ Modbus addresses are modified in system data column ✓ Modbus addresses are modified in RTD protection column ✓ Data type G29 (three 16 bit registers) is replaced with data type G125 (short float IEEE754 floating point format) to avoid truncation error on measurements such as KWh ✓ Default text is changed ✓ Data types G4, G18 and G26 are modified ✓ Modbus cell address dedicated to Ubc phase angle measurement is changed to 30266 ✓ Modbus addressing problem for event file is resolved to be compliant with other Px40 products ✓ Resolved problem of opto reset latches not turning off trip LED to be compliant with other Px40 products ✓ Resolved problem of inappropriate measurement algorithm of reverse 3 phase active and reactive power measurement ✓ Resolved problem of timer initialization on 51LR protection function ✓ Inclusion of the option "reset energies" in " measurement 2" column ✓ Resolved problem of incorrect calculation methodology in measurement of time to next start ✓ Resolved problem of not resetting on software counter used for "emergency re-start" ✓ Resolved problem of counting methodology for the "number of hot(cold) starts" ✓ Resolved problem of visibility on LCD ✓ Resolved missing modbus address (operand) of the cell 091D ✓ Resolved courier coordinate cell error regarding second stage overcurrent pickup setting	V2.09 or later	TG1.1555

Relay type: P241/2/3/…						
A4.0(06) P241 only	A	A	Oct2000	✓ Resolved correlation problem between relay output 3 operation and CB operating time counter ✓ Hysterisis for under/over frequency protection function is reduced to 0.05 Hz	V2.09 or later	TG1.1555
A4.1 (08) P241 only	B	A	Dec2000	✓ Resolved problem of inaccuracies in KWh measurement which arises after a long period of operation ✓ The two thresholds of the overcurrent protection function are changed from 1 A to 0.2 A. Also the second threshold of the I2 overcurrent protection function is changed from 0.2 A to 0.05 A	V2.09 or later	TG1.1555
	C	A	Feb2001	✓ Resolved problem of timer start initialization for drop off time of the out-of-step protection function ✓ Resolved problem of opto command to change setting group ✓ Resolved problem of cold(hot) number of start after re-boot of relay ✓ Resolved problem of inaccuracies in KWh measurement	V2.09 or later	TG1.1555
	D	A	Apr2001	✓ Correction for number of registers declared in the modbus (2 instead of 3 on G125 only) ✓ Resolved problem of fault current measurement via modbus with G125 format	V2.09 or later	TG1.1555
	E	A	Sep2001	✓ Resolved incorrect generation of error code 0x9300ffd2 which occurred during short circuit test at 70 Hz ✓ Corrected for wrong phase indication at the time of undervoltage protection activity	V2.09 or later	TG1.1555
	F	A	Nov2001	✓ Corrected for proper RTD number indication when corresponding RTD trip cell is active ✓ Correction for intermittent twice resetting requirement of trip LED ✓ Resolved initialization problem related to protection/PSL programs secondary effect on LEDs and output relays	V2.09 or later	TG1.1555
	G	A	Nov2001	✓ Resolved initialization problem related to protection/PSL programs secondary effect on LEDs and output relays	V2.09 or later	TG1.1555
	H	A	Nov2001	✓ Resolved incorrect timing for trip operation under second stage negative phase sequence protection function	V2.09 or later	TG1.1555

Relay type: P241/2/3/…						
A4.1 (08) **P241 only**		A	Mar2002	✓ Resolved generation of plerr error code on MODBUS to enhance data access method ✓ Courier co-ordinates in the communication column are modified to relieve inconsistency in courier communication cell [0Exx] numbering ✓ Corrected for mal-operation of thermal over load function after battery back-up RAM initialization when no RTD module is present	V2.09 or later	TG1.1555
A4.1(09) **P241 only**	A	A	Mar2002	✓ Correction of the method by which I2 magnitude is calculated when "D E/F" function is enabled ✓ Resolved incorrect correlation between CT ratio and derived E/F threshold	V2.09 or later	TG1.1555
	B	A	Jun2002	✓ Resolved problem of continuous EEPROM test (P241 only) ✓ Resolved problem of long polling duration of thermal protection function as well as correction for IMAX on the same function (P241 only)	V2.09 or later	TG1.1555
	C	A	Aug2002	✓ Resolved problem of unwanted disabling of I2>1 when thermal overload function is enabled (P241 only)	V2.09 or Later	TG1.1555
	E	A	Apr2004	✓ Resolved intermittent locking out the user interface and COMMS and loss of data when disturbance recorder is triggered ✓ Resolved modbus frame reception problem due to timer mismanagement	V2.09 or later	TG1.1555
	F	A	Dec-04	✓ Resolved problem of resolution on analog channels ✓ Resolved problem of correct acquisition of 5 A CT choice	V2.09 or later	TG1.1555
	E	A	Aug 2004	✓ Resolved problem with disturbance recorder triggering which could cause loss of record data ✓ Resolved unreliable MODBUS framing	V2.09 or Later	TG1.1555
	F	A	Jan 2005	✓ Software enhanced to reduce CPU usage during Event log ✓ Correction for 5 A CT connection ✓ Correction for flickering effect on LCD at low input current	V2.09 or Later	TG1.1555

Relay type: P241/2/3/…						
A4.2 (09) P241 only	G	A	Apr 2005	✓ Correction of missing error codes during re-boots when S/W is upgraded from A 4.1F	V2.09 or Later	TG1.1555
B1.0 (20)		C	Jul 2004	✓ Addition of 2 new P24x relay models P242 and P243. P242 is the same as P241 but with additional inputs/outputs. P243 is the same as P242 except it has additional differential protection. P242/3 use Eight channel OPTO input card and Eight channel Relay Output card, increasing the total programmable inputs to 16 and the total programmable outputs to 16. ✓ User alarms are added and number of existing alarms are increased by 32 ✓ Addition of Circuit Breaker Failure function ✓ Optional addition of 4 analog inputs and 4 analog outputs (current loop input output - CLIO) function. Each analog/transducer input and output selectable as 0-1/0-10/0-20/4-20 mA. ✓ Addition of measurement of I2/I1 to " measurement 1 " column ✓ Addition of hottest RTD measurement and its assigned number to "measurement 1" column ✓ Addition of Clear Event selection to "record control" column ✓ Extra disturbance recorder channel is added to the disturbance recorder to increase the total to Eight ✓ Addition of numeric alarm setting to all four WHr and VArHr energy measurement functions in the "measurement setup" column ✓ Relay OUTPUTs and LEDs test facility via MODBUS is disabled to improve safety ✓ Minimum current threshold for the second stage unbalance protection function is changed from 200 mA to 50 mA	V2.09 or later	TG1.1555 & P24x/EN T/A11

Relay type: P241/2/3/…						
B1.0 (20)				✓ Enhancement of motor start detection method by including current in conjunction with circuit breaker auxiliary contact ✓ Inclusion of temperature measurement in Fahrenheit unit as well as Ni100 and Ni120 options to RTDs temperature measurement ✓ Enhancement of programmable opto input module to operate at a wider range of voltage supply ✓ Inclusion of ddb signal DDB_ALARM_BATTERY_FAIL ✓ Inclusion of ddb signal for password control ✓ Number of available DDB elements increased to 1024 ✓ Average current is replaced with RMS current in calculation of Ieq in thermal protection algorithm ✓ Resolved generation of plerr error code on MODBUS to enhance data access method ✓ Minor navigation bug (in cell 0804) removed ✓ Addition of third setting "test mode" in the commissioning tests column with options disable/enable ✓ Courier co-ordinates in the communication column are modified to relieve inconsistency in Courier communication cell numbering ✓ Resolved incorrect generation of error code 0x9300ffd2 which occurred during short circuit test at 70 Hz ✓ Correction for wrong phase indication at the time of undervoltage protection function activity ✓ Correction for RTD temperature measurement in MODBUS fault records		

Relay type: P241/2/3/…						
B1.0 (20)				✓ Correction for proper operation of the counter used for "number of start" function when the function is disabled and "stall detection" function is enabled at the same time ✓ Correction for proper RTD number indication when corresponding RTD trip cell is active ✓ Correction for intermittent twice-resetting requirement of trip LED ✓ Resolved initialization of protection/PSL programs secondary effect on LEDs and output relays ✓ Resolved re-scaling problem for I^ maintenance and I^ lockout settings arising from a change in Broken I^ setting in the MICOM S1 setting file ✓ Resolved incorrect timing for trip operation under second stage negative phase sequence function ✓ Resolved zero sequence current measurement algorithm. The quantity was obtained from derived nominal current rather than measured nominal current ✓ Correction for mal-operation of thermal over load function after battery back-up RAM initialization when no RTD module is present ✓ Correction of the method by which negative phase sequence current magnitude is calculated when "derived E/F" function in the "configuration" column is enabled ✓ Resolved incorrect correlation between CT ratio and derived E/F threshold ✓ Removal of undesirable command for continuous test of EEPROM.		

Relay type: P241/2/3/…						
B1.0 (20) Cont				✓ Change of the acquisition time for thermal protection function from 50 ms to 20 ms ✓ Resolved momentary miss-representation of positive and negative phase sequence current magnitudes and mal-functioning of first stage I2 trip function when thermal over load function is enabled ✓ Resolved mal-operation of Derived E/F function when under test condition due to missing I2 polarizing quantity ✓ Resolved improper dependency rules concerning RTD label in second group setting column		
	A	C	Aug2005	✓ Correction to acquisition of voltage inputs.	V2.09 or later	TG1.1555 & P24x/EN T/A11
	B	C	Jan2005	✓ Resolved scaling problem of analog outputs on CLIO board write register ✓ Resolved problem of correct acquisition of 5 A CT choice ✓ Resolved problem of resolution on analog channels ✓ Resolved scaling problem of analog outputs on CLIO board write register ✓ Resolved problem of correct acquisition of 5 A CT choice ✓ Resolved problem of not recording the IA2 data on disturbance recorder ✓ Resolved problem of resolution on analog channels ✓ Resolved problem of downloading default PSL via front port of P241 due to incompatibility of the platform version	V2.09 or later	TG1.1555 & P24x/EN T/A11

Relay type: P241/2/3/…						
B1.2 (31)	A	C	Jun2005	✓ Resolved problem of upgrading software version from A4.1e to A4.1f on P241 which caused cyclic reboot ✓ Resolved problem on MODBUS driver giving rise to cyclic reboot at 60 Hz	V2.11 or later	TG1.1555 & P24x/EN T/A11
B1.3 (32)	A	C	Mar2006	✓ Resolved display of IA2,IB2 and IC2 differential bias on measurement 1 column of P242 ✓ Resolved problem of resetting trip relay and led after protection function operation and function is disabled. ✓ Resolved intermittent problem of not recognizing RTD module. 30 ms delay was included ✓ Resolved problem of re-setting back to default setting (24/27 V) of universal Vcc setting of programmable inputs following a reboot. ✓ Resolved problem of re-setting LED alarm for "CB failed trip" on the front panel ✓ Resolved error code 0x8439007C - unexpected event related to “Watt Fwd Alarm" ✓ Resolved "IN Derived Mag" measurement problem, CT ratio dependency was using the SEF CT ratio instead of phase CT ratio, Derived E/F protection is not affected.	V2.11 or later	TG1.1555 & P24x/EN T/A11
B1.4 (33)	A	C	Mar2007	✓ Addition of Hour run meter feature. ✓ Resolved conflict between "commissioning test" being enabled "test mode" blocked and operation of output relays. ✓ Resolved initialization problem of KWh metering after relay is powered down and back to ON	V2.14 (requires modification)	TG1.1555 & P24x/EN T/A11
B1.5 (33)	B	C	Mar2007	✓ Resolved re-boot error code 0x8232ffd2 which was generated on P243 set at 60Hz ✓ Resolved initialization problem of KWh metering after relay is powered down and back to ON	V2.14 (requires modification)	TG1.1555 & P24x/EN T/A11
A4.3 (09) P241 only		A	Apr2007	✓ Adaptation to recognize new RTD board ZN0044-1 (and of course previous board ZN0010-1). ZN0044 design has improved filtering. ✓ Resolved initialization problem of KWh metering after relay is powered down and back to ON	V2.09 or later	TG1.1555 & P24x/EN T/A11

Relay type: P241/2/3/…							
B1.6(33)		C	Oct2007	✓ via to	Resolved problem of events extraction by PACiS system modbus communication due to the system being unable synchronize P24x	V2.14 (requires modification)	TG1.1555 & P24x/EN T/A11
B1.7(33)		C	Nov2007	✓ ✓ ✓	Resolved problem of all latched relay contacts dropping off for 5 ms on relay board 2 if another relay contact is set ON. This only affects P242/3 relays which have 2 relay boards of 8 contacts. Resolved problem of relay contacts dropping off for 3ms when another relay is set on after a relay reboot. Resolved problem of Out Of Service LEDs not turning off after Commission Tests Test Mode setting is disabled	V2.14 (requires modification)	TG1.1555 & P24x/EN T/A11
B1.8(33)		C	Dec 2008	✓	Fixes major bug (when using multiple setting groups, changes of setting group using Courier or PAST will not update PSL group after first change)	V2.14 (requires modification)	TG1.1555 & P24x/EN T/A11
B2.0(34)		C	July 2009	✓ ✓	Control inputs have been included (remote CB control using IEC 103 is now possible). Resolved issue of Modbus error when master station requests “Motor Run time” and the corresponding value is greater than 328 hours.	V2.14 and S1 Studio 3.1.0	TG1.1555 & P24x/EN T/A11
C1.1 (40)		J(P241) K(P242/3)	Jan 08	✓ ✓ ✓ ✓ ✓ ✓ ✓	Includes Field Failure protection function (40) Includes Anti Backspin protection function (27 remanant) Hot keys and programmable function keys (P242/3 only) have been added Second rear communication port (EIA(RS)232/EIA(RS)485) has been added Tri-State color LED`s (P242/3 only) have been added Dual characteristics optos and opto filter control have been added Control inputs have been included (remote CB control using IEC 103 is now possible).	V2.14 or later	TG1.1555 & P24x/EN M/A11

Relay type: P241/2/3/…						
C2.0 (41)		J(P241) K(P242/3)	May 08	✓ A new DDB#118 Trip LED has been added ✓ Default PSL is modified to include new DDB#118 Trip LED ✓ Trip relay 3 restriction is removed ✓ 3 Phase volt check to ensure correct phase sequence before start has been added ✓ Measurement 4 menu is amended to include Number of Field Failure 1 Trip, Number of Field Failure 2 Trip, Number of I>3 Trip and Number of I>4 trip ✓ PSL positional data extraction facility has been included	V2.14 or later	TG1.1555 & P24x/EN M/A11
C3.0 (45)		J(P241) K(P242/3)	Aug 08	✓ Short Circuit Protection function is enhanced to include 2 stages of IDMT and 2 stages of DT ✓ A new non-protection function "Phase Rotation" has been added ✓ Visibility conflict between Out of Step and Field Failure protection functions is removed	V2.14 or later	TG1.1555 & P24x/EN M/A11

Relay type: P241/2/3/…						
C4.0 (46)		J(P241) K(P242/3)	Dec 08	✓ Inclusion of CT and VT supervision ✓ Supports Chinese and Russian HMI ✓ Additional 4 opto inputs and 4 relay outputs as an option (P241 only) ✓ Migrate DDB from 1024 to 2048 ✓ Resolved Emergency Restart problem ✓ Resolved RTD calibration problem ✓ Resolved visibility issue between “Nb Emergency Rst” and “Reset Nb.Em.Rst” cells in Measurement 3 column not being coherent with “Emergency Rest.” Cell. ✓ Resolved problem of changing field failure cell In configuration column not being taken into account by the relay. ✓ Resolved visibility issues with Micom S1 on Derived E/F and Sensitive E/F: reset characteristics should be always DT (for IEC/UK curves). ✓ Resolved inconsistency between the PSL used and the active setting group when changing setting group via the commands in S&R Courier or PAST ✓ Removed dependency of “Limit Nb Starts” on “Stall detection” start criteria. Hence no need to enable “Stall Detection” to activate “Limit Nb Starts” Relay 4 in the default PSL and associated default LEDs on front panel will now operate correctly.	V2.14 and S1 Studio 3.1.0	TG1.1555 & P24x/EN M/A11
C4.0 (47)		J(P241) K(P242/3)	Aug 09	✓ Resolved issue of incorrect file headers in data model 46. Data model 46 has been removed from cortec configurator.	V2.14 and S1 Studio 3.1.0	P24x/EN M/C22
C5.1 (51)		J(P241) K(P242/3)	Jan 09	✓ IEC 61850 Phase II Enhancements ✓ Read Only Mode ✓ Resolved problem with Stall detection threshold ✓ Resolved problem of CLIO output over flow	V2.14 and S1 Studio 3.1.0	P24x/EN M/C32

Relay type: P241/2/3/…						
C6.2 (57)		J(P241) K(P242/3)	November 09	✓ User programmable curve facility enhancement for Thermal, Short Circuit, Derived Earth Fault and Sensitive Earth Fault protection. ✓ IEC 61850 Phase 2.1 enhancement. Phase 2.1 includes; Energy measurements and Reset controls for demand and thermal measurements using the MMTR Logical Node. Also Unit multipliers are provided for all measurements. ✓ Redundant Ethernet communication enhancement ✓ Opto inputs 1 ms time stamping accuracy enhancement ✓ Resolved the issue of maximum pre-time duration being too short in the Disturbance Recorder (DR). Pre fault trig time in DR increased to 5 sec at 50 HZ. ✓ Resolved problem of DR not handling DDBs > 1024 ✓ Resolved issue of Modbus error when master station requests “Motor Run time” and the corresponding value is greater than 328 hours. ✓ Dependency of “No. of Starts” with “Thermal Protection” function is removed. Thermal state will be evaluated whether or not “Thermal Protection” function is enabled. ✓ Minimum current and voltage thresholds (20 mA and 1 V for In =1A and Vn = 100/120 V, 100 mA and 1 V for In = 5A and Vn = 100/120 V) are included in the “Out of Step” protection function. This function is blocked if current and voltage are less than threshold. ✓ Dependency of “Stall detection” threshold with I_{th} setting is removed.	V2.14 and S1 Studio 3.1.0	P24x/EN M/C52

Relay type: P241/2/3/…						
C6.2 (57)		J(P241) K(P242/3)	November 09	✓ CLIO output “maximum power” setting is increased to 30 MW. ✓ Resolved problem of reading negative angles in Measurement Viewer, Courier Device browser and PAST. ✓ Resolved problem of reading non zero Active, reactive and apparent power when breaker is open. These measurements will read zero when current is less than 5% Inom and voltage is less than 10% Unom. ✓ Resolved issue of non-trip when 1<I/Ith<1.1 in IDMT curves. Trip time will be the the same as when I/Ith = 1.1 ✓ Resolved issue of not reporting in Gooses when “Virtual Output x” DDB is disabled in “Record Control”. ✓ IEEE TD setting range is changed from 0.5~15 to 0.01~100 ✓ Resolved problem of Short Circuit setting changes via LCD or Courier device browser not taking effect before reboot or another Short Circuit column change. ✓ Resolved problem of missing “Hz” and “%” characters in default display when language is set to Chinese.	V2.14 and S1 Studio 3.1.0	P24x/EN M/C52

Setting File Software Version	Relay Software Version (P24x)																			
	B1.0 (20)	B1.0 (20A)	B1.0 (20B)	B1.2 (31)	B1.3 (32)	B1.4 (33)	B1.5 (33)	B1.6 (33)	B1.7 (33)	B1.8 (33)	B2.0 (34)	C1.1 (40)	C2.0 (41)	C3.0 (45)	C4.0 (46)	C4.0 (47)	C5.1 (51)	C6.2 (57)		
20	✓	✓	✓	✓	✓	✓	✓	✓	✓	✓	✓	×	×	×	×	×	×	×		
30	×	×	✓	✓	✓	✓	✓	✓	✓	✓	✓	×	×	×	×	×	×	×		
31	×	×	×	✓	✓	✓	✓	✓	✓	✓	✓	×	×	×	×	×	×	×		
32	×	×	×	×	✓	✓	✓	✓	✓	✓	✓	×	×	×	×	×	×	×		
33	×	×	×	×	×	×	✓	✓	✓	✓	✓	×	×	×	×	×	×	×		
34	×	×	×	×	×	×	×	×	×	×	✓	×	×	×	×	×	×	×		
40	×	×	×	×	×	×	×	×	×	×	×	✓	✓	✓	✓	✓	✓	✓		
41	×	×	×	×	×	×	×	×	×	×	×	×	✓	✓	✓	✓	✓	✓		
45	×	×	×	×	×	×	×	×	×	×	×	×	×	✓	✓	✓	✓	✓		
46	×	×	×	×	×	×	×	×	×	×	×	×	×	×	✓	✓	✓	✓		
47	×	×	×	×	×	×	×	×	×	×	×	×	×	×	×	✓	✓	✓		
51	×	×	×	×	×	×	×	×	×	×	×	×	×	×	×	×	✓	✓		
57	×	×	×	×	×	×	×	×	×	×	×	×	×	×	×	×	×	✓		

Setting File Software Version	Relay Software Version (P241 only)																					
	A3.0 (00)	A3.1 (00)	A3.1 (02)	A3.1 (04)	A3.1 (07)	A4.0 (03)	A4.0 (06)	A4.0 (08)	A4.1 (08)	A4.1 (09)	A4.2 (09)	A4.3 (09)										
00	✓	✓	×	×	×	×	×	×	×	×	×	×										
02	×	×	✓	×	×	×	×	×	×	×	×	×										
04	×	×	×	✓	×	×	×	×	×	×	×	×										
07	×	×	×	×	✓	×	×	×	×	×	×	×										
03	×	×	×	×	×	✓	×	×	×	×	×	×										
06	×	×	×	×	×	×	✓	×	×	×	×	×										
08	×	×	×	×	×	×	×	✓	✓	×	×	×										
09	×	×	×	×	×	×	×	×	×	✓	✓	✓										

PSL file software version	Relay Software Version (P24x)																		
	B1.0 (20)	B1.0 (20A)	B1.0 (20B)	B1.2 (31)	B1.3 (32)	B1.4 (33)	B1.5 (33)	B1.6 (33)	B1.7 (33)	B1.8 (33)	B2.0 (34)	C1.1 (40)	C2.0 (41)	C3.0 (45)	C4.0 (46)	C4.0 (47)	C5.1 (51)	C6.2 (57)		
20	✓	✓	✓	✓	✓	✓	✓	✓	✓	✓	✓	×	×	×	×	×	×	×		
30	×	×	✓	✓	✓	✓	✓	✓	✓	✓	✓	×	×	×	×	×	×	×		
31	×	×	×	✓	✓	✓	✓	✓	✓	✓	✓	×	×	×	×	×	×	×		
32	×	×	×	×	✓	✓	✓	✓	✓	✓	✓	×	×	×	×	×	×	×		
33	×	×	×	×	×	✓	✓	✓	✓	✓	✓	×	×	×	×	×	×	×		
34	×	×	×	×	×	✓	✓	✓	✓	✓	✓	×	×	×	×	×	×	×		
40	×	×	×	×	×	×	×	×	×	×	×	✓	✓	×	×	×	×	×		
41	×	×	×	×	×	×	×	×	×	×	×	×	✓	×	×	×	×	×		
45	×	×	×	×	×	×	×	×	×	×	×	×	×	✓	×	×	×	×		
46	×	×	×	×	×	×	×	×	×	×	×	×	×	×	✓	✓	✓	✓		
47	×	×	×	×	×	×	×	×	×	×	×	×	×	×	×	✓	✓	✓		
51	×	×	×	×	×	×	×	×	×	×	×	×	×	×	×	×	✓	✓		
57	×	×	×	×	×	×	×	×	×	×	×	×	×	×	×	×	×	✓		

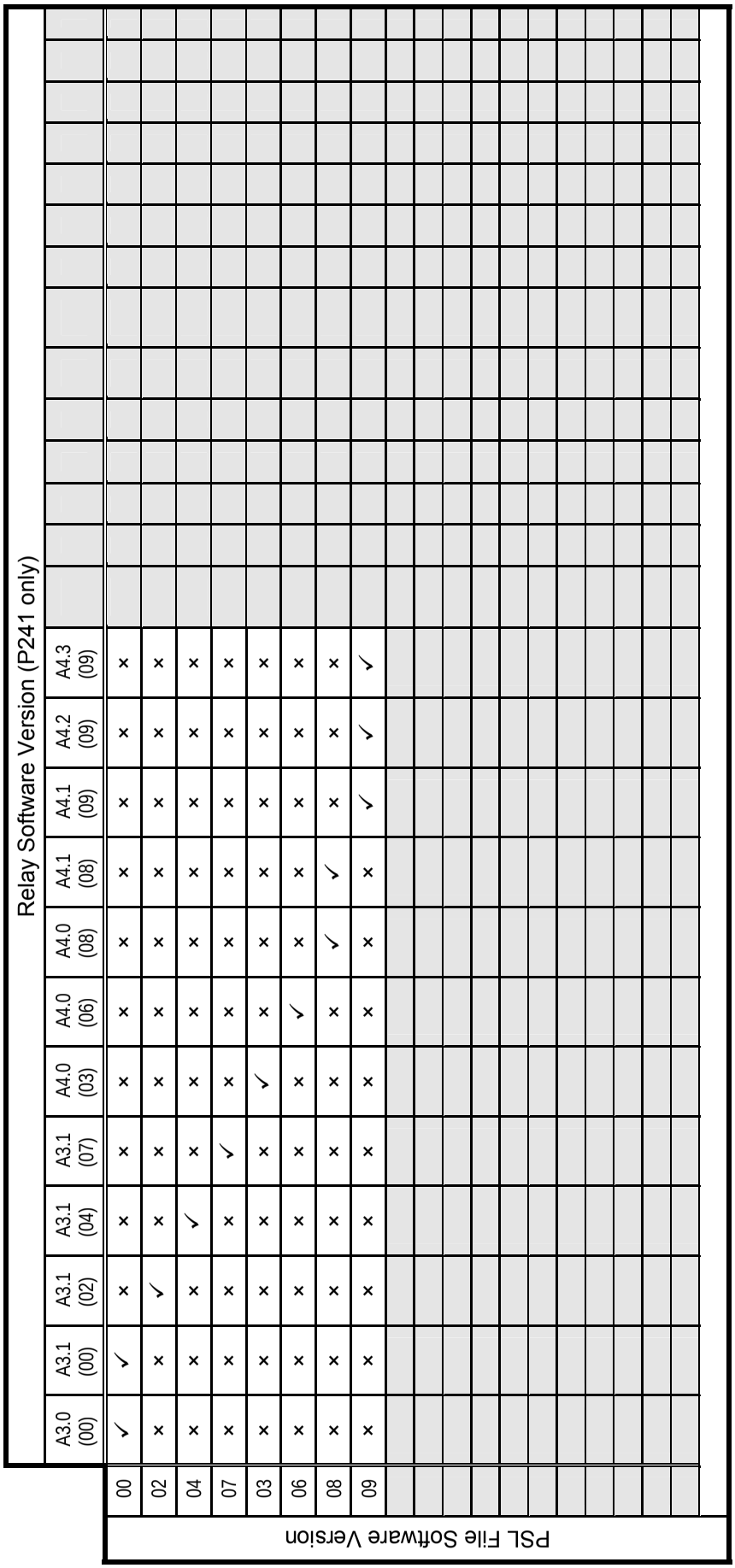
PSL File Software Version
00
02
04
07
03
06
08
09
Relay Software Version (P241 only)
A3.0 (00)
A3.1 (00)
A3.1 (02)
A3.1 (04)
A3.1 (07)
A4.0 (03)
A4.0 (06)
A4.0 (08)
A4.1 (08)
A4.1 (09)
A4.2 (09)
A4.3 (09)

Menu Text File Software Version	Relay Software Version (P24x)																		
	B1.0 (20)	B1.0 (20A)	B1.0 (20B)	B1.2 (31)	B1.3 (32)	B1.4 (33)	B1.5 (33)	B1.6 (33)	B1.7 (33)	B1.8 (33)	B2.0 (34)	C1.1 (40)	C2.0 (41)	C3.0 (45)	C4.0 (46)	C4.0 (47)	C5.1 (51)	C6.2 (57)		
20	✓	✓	✓	✓	✓	✓	✓	✓	✓	✓	✓	×	×	×	×	×	×	×		
30	×	×	✓	✓	✓	✓	✓	✓	✓	✓	✓	×	×	×	×	×	×	×		
31	×	×	×	✓	✓	✓	✓	✓	✓	✓	✓	×	×	×	×	×	×	×		
32	×	×	×	×	✓	✓	✓	✓	✓	✓	✓	×	×	×	×	×	×	×		
33	×	×	×	×	×	✓	✓	✓	✓	✓	✓	×	×	×	×	×	×	×		
34	×	×	×	×	×	✓	✓	✓	✓	✓	✓	×	×	×	×	×	×	×		
40	×	×	×	×	×	×	×	×	×	×	×	✓	✓	×	×	×	×	×		
41	×	×	×	×	×	×	×	×	×	×	×	×	✓	×	×	×	×	×		
45	×	×	×	×	×	×	×	×	×	×	×	×	×	✓	×	×	×	×		
46	×	×	×	×	×	×	×	×	×	×	×	×	×	×	✓	✓	✓	✓		
47	×	×	×	×	×	×	×	×	×	×	×	×	×	×	×	✓	✓	✓		
51	×	×	×	×	×	×	×	×	×	×	×	×	×	×	×	×	✓	✓		
57	×	×	×	×	×	×	×	×	×	×	×	×	×	×	×	×	×	✓		

Menu text remains compatible within each software version but is not compatible across different versions

Menu Text File Software Version	Relay Software Version (P241 only)																															
	A3.0 (00)	A3.1 (00)	A3.1 (02)	A3.1 (04)	A3.1 (07)	A4.0 (03)	A4.0 (06)	A4.0 (08)	A4.1 (08)	A4.1 (09)	A4.2 (09)	A4.3 (09)																				
00	✓	✓	×	×	×	×	×	×	×	×	×	×																				
02	×	×	✓	×	×	×	×	×	×	×	×	×																				
04	×	×	×	✓	×	×	×	×	×	×	×	×																				
07	×	×	×	×	✓	×	×	×	×	×	×	×																				
03	×	×	×	×	×	✓	×	×	×	×	×	×																				
06	×	×	×	×	×	×	✓	✓	✓	×	×	×																				
08	×	×	×	×	×	×	×	✓	✓	×	×	×																				
09	×	×	×	×	×	×	×	×	×	✓	✓	✓																				

VH

VH

Customer Care Centre

http://www.schneider-electric.com/sites/corporate/en/support/contact/customer-care-contact.page

Schneider Electric

35 rue Joseph Monier
92506 Rueil-Malmaison
FRANCE

Phone: +33 (0) 1 41 29 70 00
Fax: +33 (0) 1 41 29 71 00

www.schneider-electric.com

Publication: P24x/EN M/C52

Publishing: Schneider Electric

11/2010

© 2010 Schneider Electric. All rights reserved.