ADDITIONAL NOTES :

- HANDLE EXTENSION AVAILABLE P–FRAME BREAKER ORDER KIT REF. 33195

KNOCKOUTS		
SYMBOL	CONDUIT SIZE	
	IN	MM
A	.50	13
B	.75	19

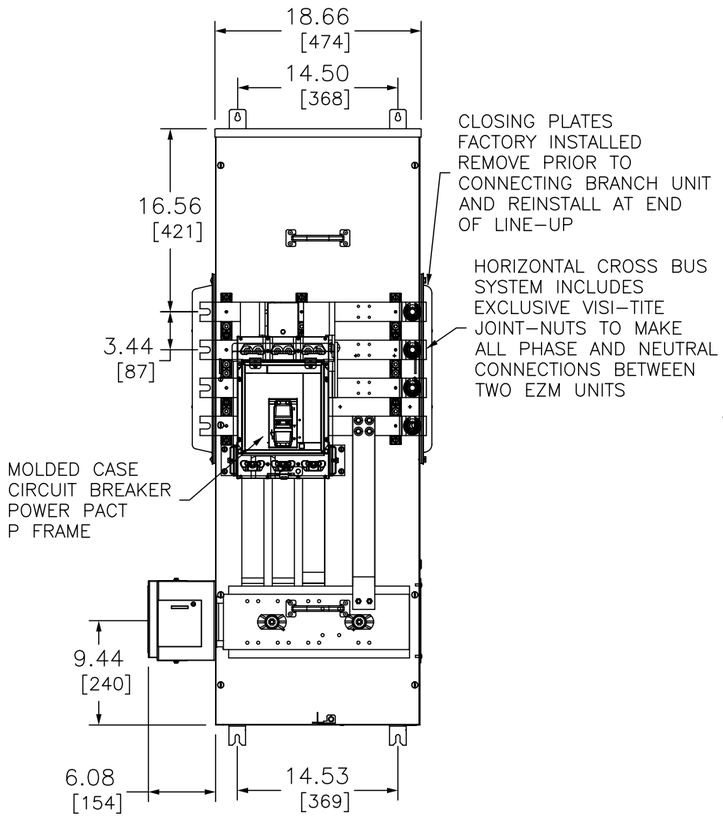

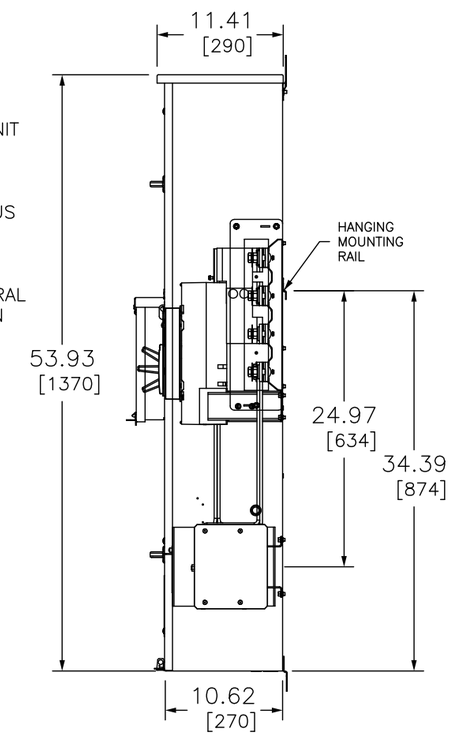

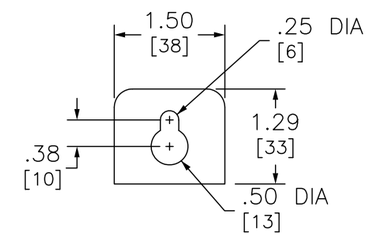

TOP MOUNTING BRACKET

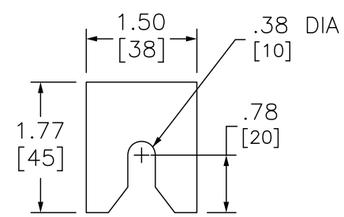

BOTTOM MOUNTING BRACKET

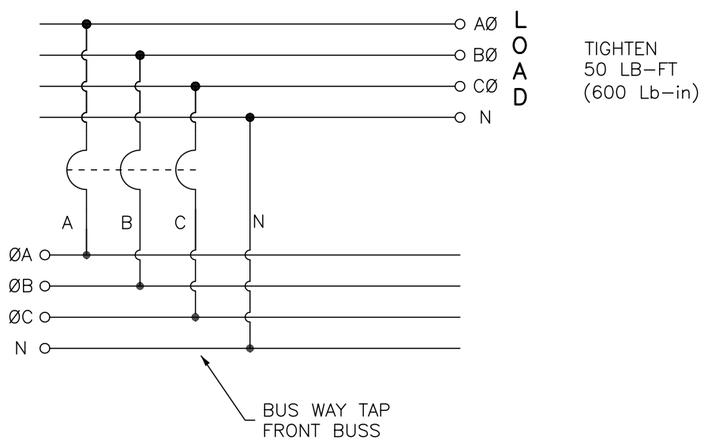

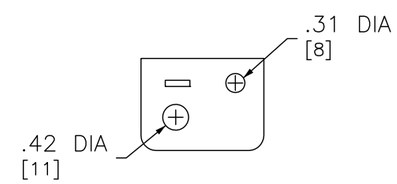

SEAL BRACKET

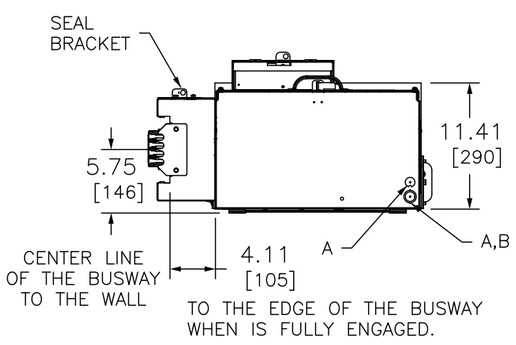

DUAL DIMENSIONS: INCHES / MILLIMETERS

SYSTEM TYPE	MAIN RATING (AMPERES)	CATALOG NUMBER	MOLDED CASE BREAKER (FACTORY INSTALLED) INTERRUPTING RATING 65kA @ 240V
3Ø 4W 208Y/120VAC OR 240/120VAC DELTA	1000	EZM31000CBNFBTL	PGF36100U31A

NFBTL SUFIX MEANS [NEUTRAL FRONT BUS TAP LEFT]

NOTES:
FINISH – GRAY BAKED ENAMEL POWDER COAT PAINT OVER CLEANED GALVANNEALED STEEL.
UL LISTED – FILE E131840, VOL. M
MAIN HORIZONTAL CROSS BUS RATED AT 1000 AMPERES.ALUMINUM 1/4 x 2–1/2 TWO LAMINATIONS
MAIN DEVICES ARE SEALABLE BY UTILITY.
GANGABLE MULTI–METERING EQUIPMENT IS DESIGNED FOR WALL MOUNTING ONLY.
(NOT SUITABLE FOR FLOOR STANDING EQUIPMENT.)
1000 AMP MAIN CIRCUIT BREAKER SUITABLE FOR USE ONLY WITH BRANCH DEVICES.
GROUND CONTINUITY IS MAINTAINED THROUGH THE ENCLOSURE WITH BUSWAY BONDING BRACKETS.

EZ METER–PAK GANGABLE
MULTI–METERING EQUIPMENT
1000A 3PH 4W MAIN CIRCUIT BREAKER
BUSWAY FEED NEUTRAL FRONT BUS TAP LEFT
INDOOR TYPE 1 ENCLOSURE

SQUARE D™ by Schneider Electric

DWG# NO. PWFDS–SYRS–0195

NOVEMBER 2017