Villaya
Solar Water Pumping System

Quick Installation Guide

AEC-WPS01-DE

ATV312 SOLAR DRIVE

Schneider Electric

Contents

Safety Information.....4
1. Installation of Solar Drive Enclosure.....7
1.1 Parts Identification.....7
1.2 Assembly of Solar Drive Enclosure and ATV312 Solar Drive.....10
1.3 Internal Wiring.....13
1.4 Connection from different glands.....16
1.5 External Wiring 18
2. Functionality of Indicators and Push buttons.....25
3. Get Started.....26
4. Trouble shooting.....33
Appendix.....34

Read these instructions carefully, and look at the equipment to become familiar with the device before trying to install, operate, or maintain it. The following special messages may appear throughout this documentation or on the equipment to warn of potential hazards or to call attention to information that clarifies or simplifies a procedure.

Please Note

Electrical equipment should be installed, operated, serviced, and maintained only by qualified personnel. No responsibility is assumed by Schneider Electric for any consequences arising out of the use of this material.

A qualified person is one who has skills and knowledge related to the construction and operation of electrical equipment and its installation, and has received safety training to recognize and avoid the hazards involved.

⚠ DANGER

DANGER indicates an imminently hazardous situation which, if not avoided, will result in death or serious injury.

⚠ WARNING

WARNING indicates a potentially hazardous situation, which, if not avoided, can result in death, serious injury or equipment damage.

⚠ CAUTION

CAUTION indicates a potentially hazardous situation which, if not avoided, can result in minor or moderate injury or equipment damage.

NOTE

NOTE is used to address practices not related to physical injury.

CAUTION

EQUIPMENT OPERATION HAZARD

- Verify that all installation and setup procedures have been completed.
- Before operational tests are performed, remove all blocks or other temporary holding means used for shipment from all component devices.
- Remove tools, meters, and debris from equipment.
- Perform all start-up tests recommended in this document.
- Store all equipment documentation for future references.

Failure to follow these instructions can result in injury or equipment damage.

BEFORE YOU BEGIN

Read and understand these instructions before performing any procedure with Solar Drive Enclosure and ATV312 Solar Drive.

⚠ DANGER

HAZARD OF ELECTRIC SHOCK, EXPLOSION, OR ARC FLASH

- Read and understand this manual before installing or operating the Solar Drive Enclosure and Altivar312 Solar Drive. The adjustment, repair, and maintenance must be performed by qualified personnel only.
- The user is responsible for compliance with all international and national electrical code requirements with respect to grounding of all equipment.

Solar Drive Enclosure:

- DO NOT touch the pre-wired cables inside the solar drive enclosure during power ON.
- DO NOT short across terminal blocks for PA/+ and PC/– or across U, V and W inside the enclosure.
- DO NOT supply power from grid and solar simultaneously.
- Once the installation is completed, close the enclosure door before applying the power.

ATV312 Solar Drive:

- DO NOT touch unshielded components or terminal strip screw connections with voltage present.
- DO NOT short across terminals PA/+ and PC/– or across the DC bus capacitors.
- Before servicing the variable speed drive:
  - Disconnect the power, including external control power that may be present.
  - Place a **DO NOT TURN ON** label on all the power disconnects.
  - Lock all the power disconnects in the open position.
  - WAIT 15 MINUTES to allow the DC bus capacitors to discharge after disconnecting the power supply.
  - Measure the voltage of the DC bus between the PA/+ and PC/– terminals to ensure that the voltage is less than 42 Vdc.
  - If the DC bus capacitors do not discharge completely, contact your local Schneider Electric representative.
  - Do not repair or operate the drive.
- Any changes made to the parameter settings must be performed by qualified personnel only.
- Install and close all the covers before applying power or starting and stopping the drive.

Failure to follow these instructions will result in death or serious injury.

⚠ WARNING

DAMAGE DRIVE EQUIPMENT

- Do not operate or install any drive or drive accessory that appears damaged.
- Ensure common ground for solar panel, motor, ATV312 Solar Drive and Solar Drive Enclosure before supplying the power from solar panels or grid.

Failure to follow these instructions can result in death, serious injury, or equipment damage.

⚠ CAUTION

EQUIPMENT OPERATION HAZARD

- Start/Stop push button on the enclosure door should be operated in case of emergency.

Failure to follow these instructions can result in serious injury, or equipment damage.

1. Installation of Solar Drive Enclosure

The solar drive enclosure is a pre-wired enclosure which is compatible with all ATV312 solar drives ranging from 0.18kW (0.25 HP) / to 5.5kW (7.5 HP). The enclosure allows an easy interface with solar panel, grid supply, pump and water level sensor. It is an outdoor enclosure meeting IP55 standards and can be wall or floor mounted.

Packaging:

The Solar Drive Enclosure packaging box contains a pre-wired Solar Drive Enclosure, Industrial keys (2 Nos), and Quick installation guide.

1.1 Parts Identification

This section shows the pictorial representation of the solar drive enclosure in different directions.

Front view of the closed Enclosure

Part Number	Description
1	Industrial Lock
2	Pump ON Indicator
3	Fault Indicator
4	Grid connection (Single or 3-Phase)
5	Solar panel connection
6	Water level sensor connection
7	Pump/Motor connection
8	Pump Start/Stop button
9	Keys

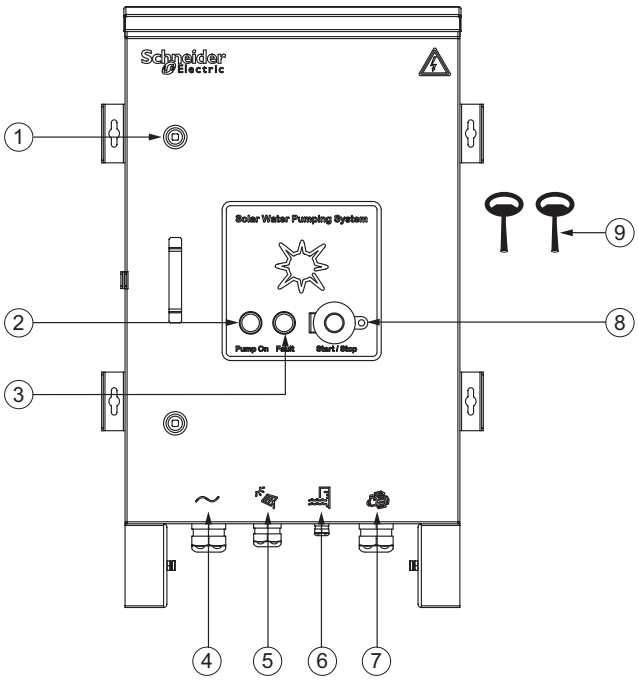

Back view of the Enclosure

Part Number	Description
10	Wall mounting bracket
11	Earthing point

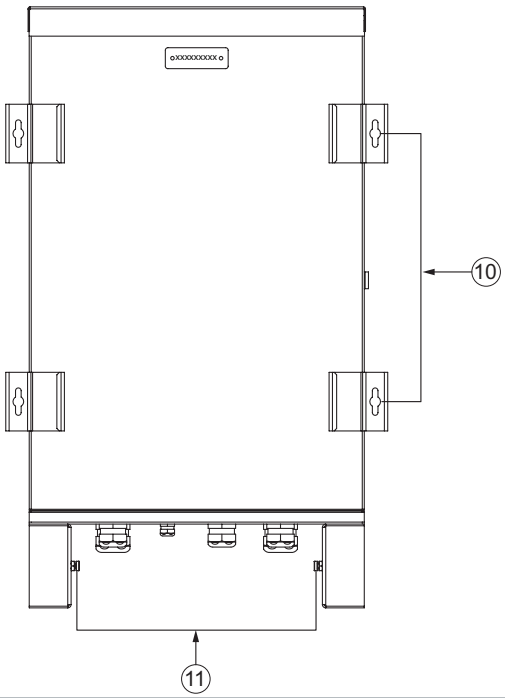

Side view of the Enclosure

Part Number	Description
12	Floor mounting bracket

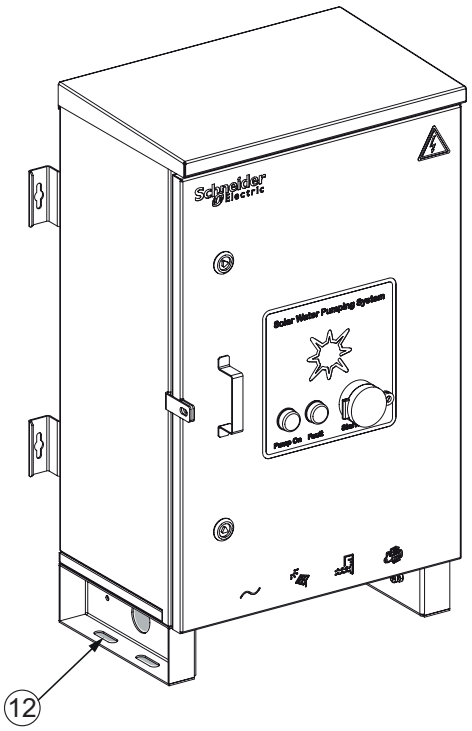

Gland Description

Part Number	Gland Description Sq.mm (AWG)	Type of connection
13	4 Core 6 (10)	Grid input (Single or 3-Phase)
14	4 Core 10 (8)	Grid input (Single or 3-Phase)
15	2 Core 6 (10)	Solar input
16	2 Core 10 (8)	Solar input
17	6 mm Dia Co-axial	Water level sensor output
18	4 Core 6 (10)	Motor input (3-phase)
19	4 Core 10 (8)	Motor input (3-Phase)

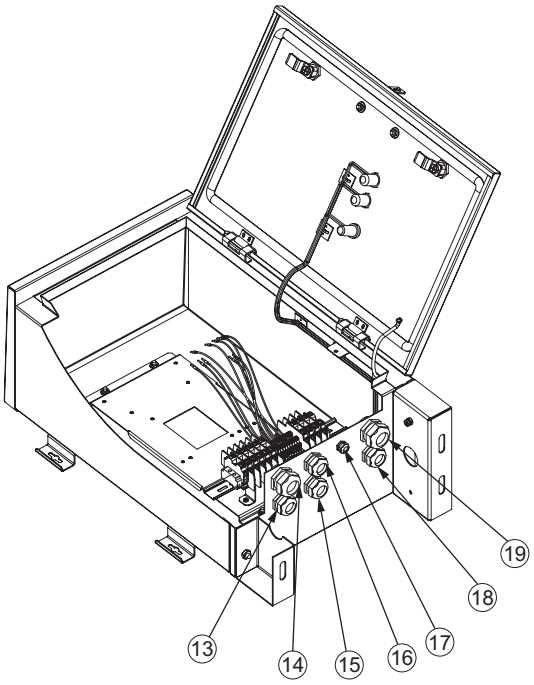

Ferrule marking on the Control cables

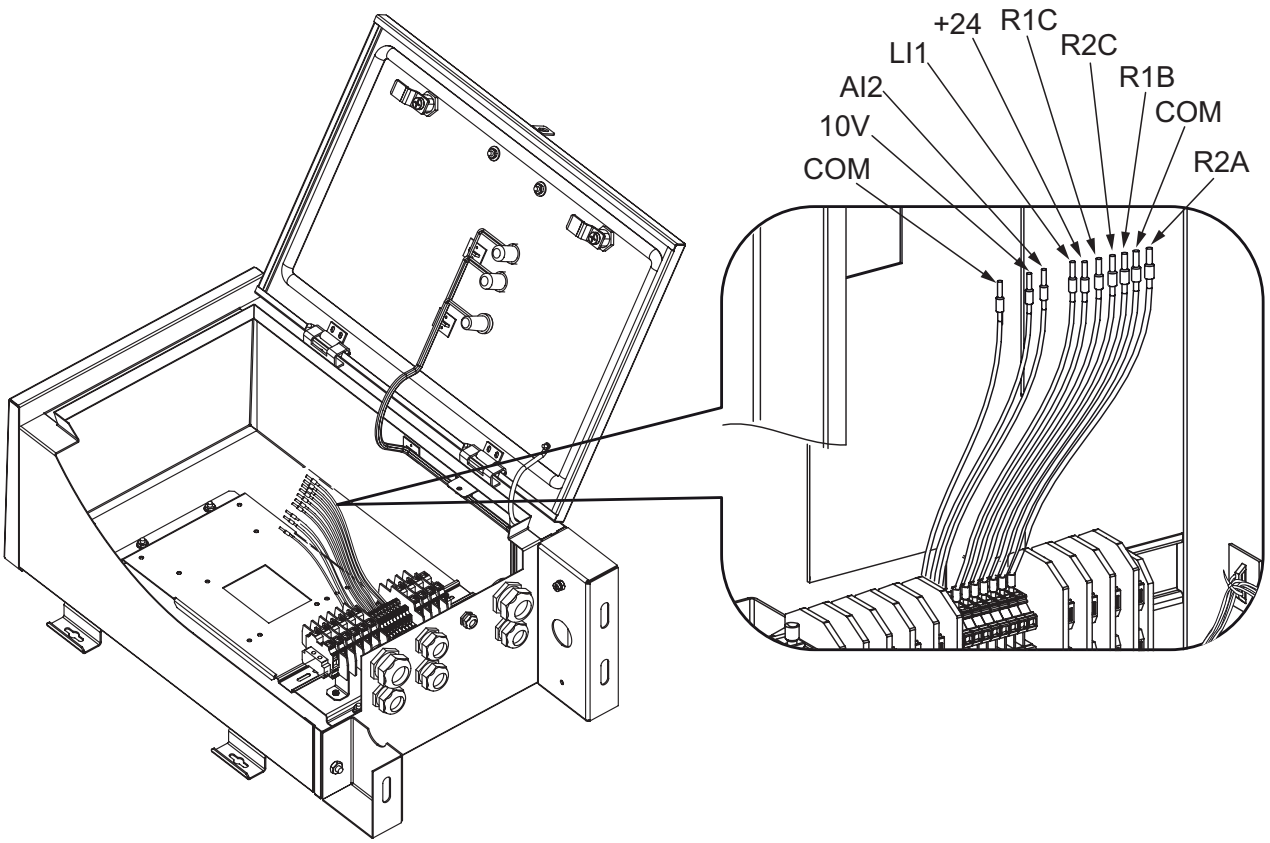

1.2 Assembly of Solar Drive Enclosure and ATV312 Solar Drive

This section shows the pictorial representation of the Solar Drive Enclosure in different directions.

Follow the below procedure to mount and wire the Altivar312 Solar Drive inside the enclosure.

a) Place the solar drive enclosure in horizontal postion.
Open the enclosure door using the key which is available in the enclosure package.

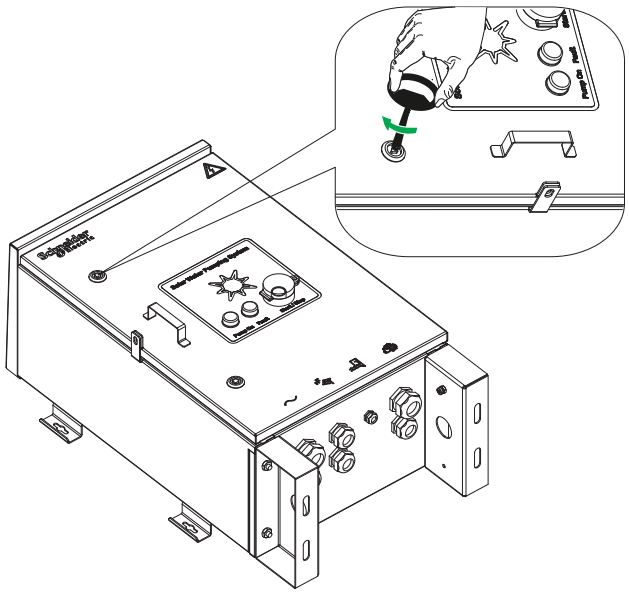

b) Remove the acrylic sheet, which is already fixed inside the solar drive enclosure using M4 Star size screw driver.

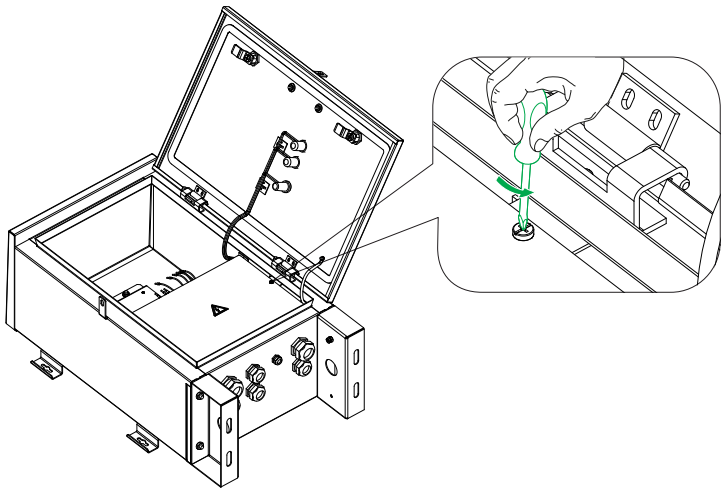

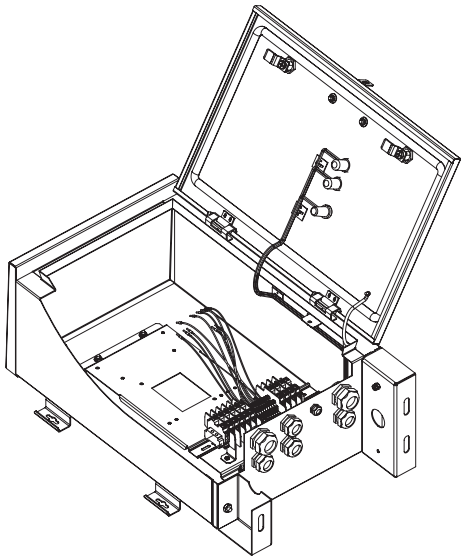

c) Assemble the ATV312 solar drive inside the enclosure as shown in the picture.

The drive mounting plate which is inside the enclosure has different mounting dimensions for different drives.

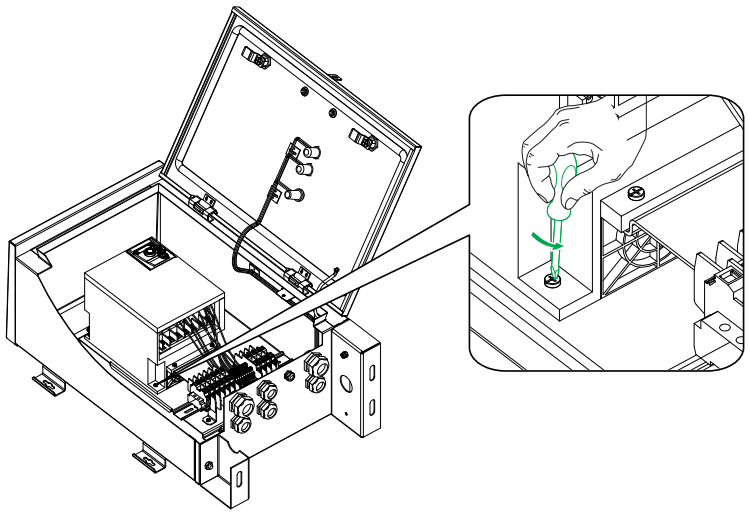

Note: Refer to the table **Mounting Dimensions** for different types of drives.

Mounting Dimensions

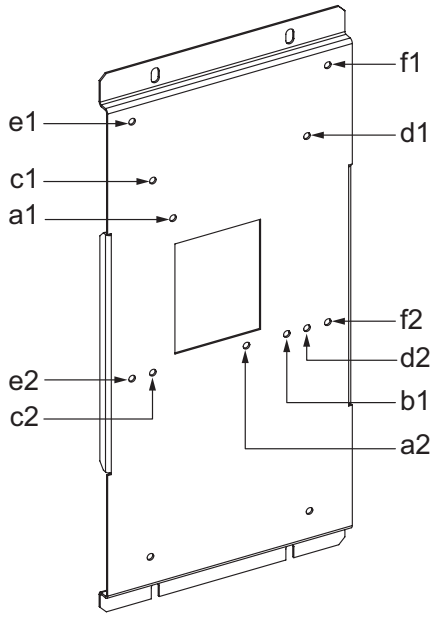

HP/KW	200V motor solar or single-phase Drive	200V motor solar or three-phase Drive	400V motor solar or three-phase Drive	Mounting hole	Ø mm(.in)
0.25/0.18 0.5/0.37 0.75/0.55 1/0.75	ATV312H018M2 412 ATV312H037M2 412 ATV312H055M2 412 ATV312H075M2 412	ATV312H018M3 412 ATV312H037M3 412 ATV312H055M3 412 ATV312H075M3 412		(a1,a2)	2 x M4
1.5/1.1 2/1.5 0.5/0.37 0.75/0.55 1/0.75	ATV312HU11M2 412 ATV312HU15M2 412	ATV312HU11M3 412 ATV312HU15M3 412	ATV312HU11N4 412 ATV312HU15N4 412 ATV312H037N4 412 ATV312H055N4 412 ATV312H075N4 412	(a1,b1)	
3/2.2 4/3 5/4	ATV312HU22M2 412	ATV312HU22M3 412 ATV312HU30M3 412 ATV312HU40M3 412	ATV312HU22N4 412 ATV312HU30N4 412 ATV312HU40N4 412	(c1, c2,d1,d2)	4 x M4
7.5/5.5		ATV312HU55M3 412	ATV312HU55N4 412	(e1,e2, f1,f2)	

d) Open ATV312 solar drive lid cover and remove the plate.

Keep the removed plate in a secured place. Ensure to replace the plate once the drive connection is complete.

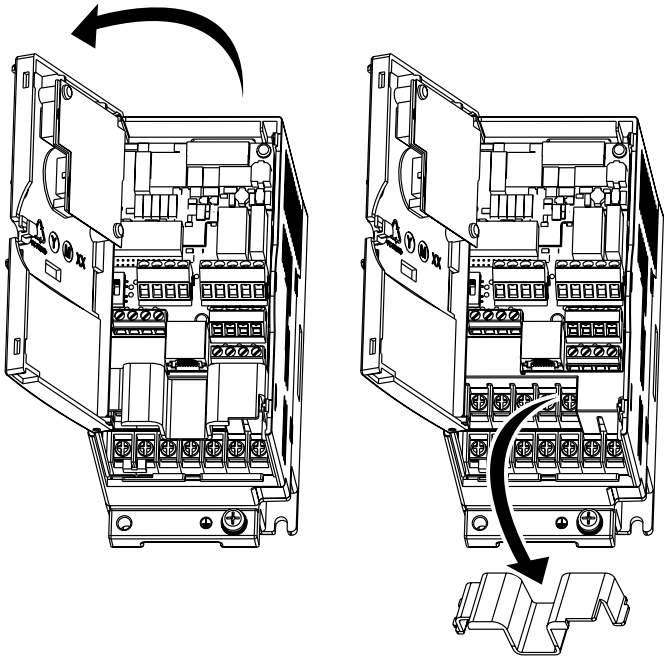

1.3 Internal Wiring

i. Control cable connection from Solar drive enclosure terminal block to ATV312 solar drive.

Ferrule marking on Control Cables from Terminal block

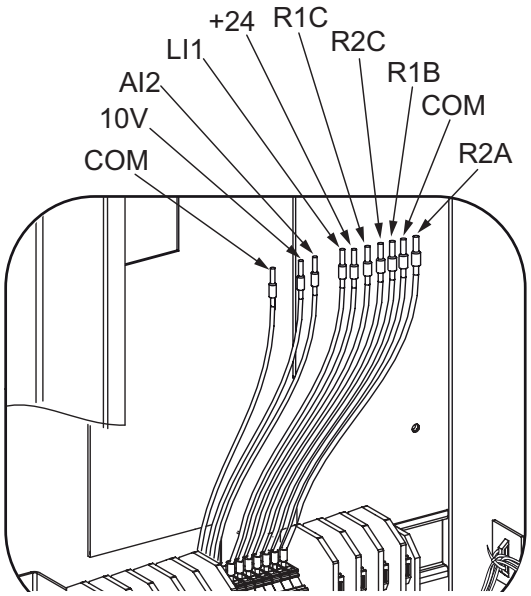

Control Terminals on ATV312 Solar Drive

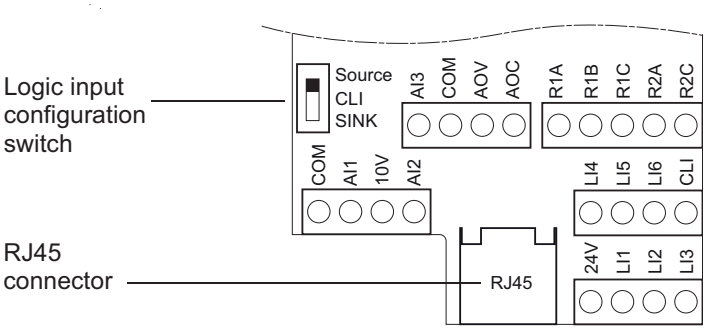

Wiring Diagram

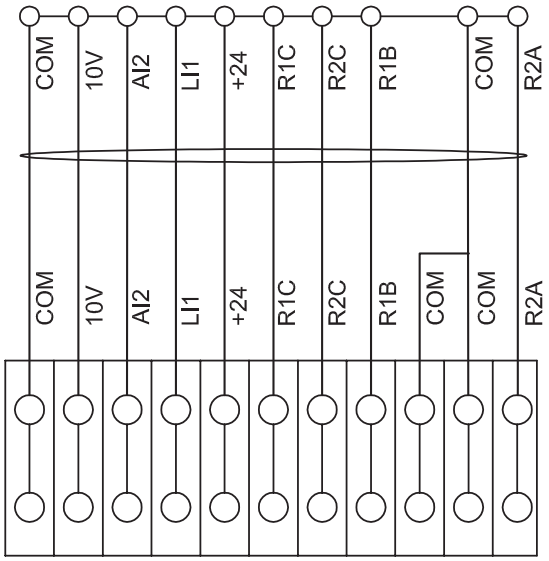

Control Terminals on ATV312 Solar Drive

Terminal blocks on Solar Drive Enclosure

Connect the open end of the control cables from the terminal block to the control terminals on ATV312 solar drive.

ii. Power cable connection from solar drive enclosure terminal block to ATV312 solar drive

Identify the power terminals.

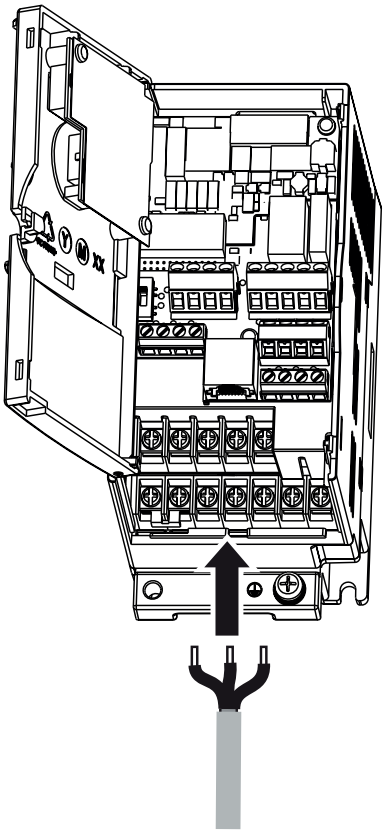

Understanding the arrangement of power terminals for various ATV312 solar drives.

ATV312H U11M2, U15M2, U22M2

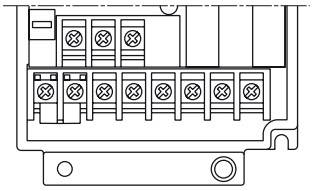

⏚	R/L1	S/L2					
P0	PA/+	PB	PC/-	U/T1	V/T2	W/T3	⏚

ATV312H0●●M2

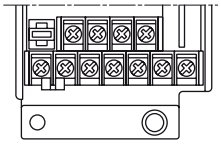

⏚	⏚	R/L1	S/L2				
P0	PA/+	PB	PC/-	U/T1	V/T2	W/T3	

ATV312H U11M3 to U40M3, 0●●N4, U11N4 to U40N4

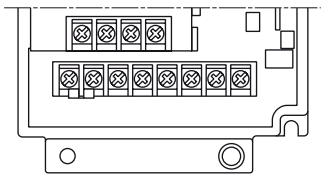

⏚	R/L1	S/L2	T/L3				
P0	PA/+	PB	PC/-	U/T1	V/T2	W/T3	⏚

ATV312H0●●M3

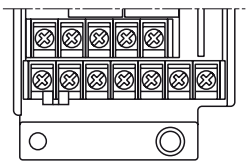

⏚	⏚	R/L1	S/L2	T/L3			
P0	PA/+	PB	PC/-	U/T1	V/T2	W/T3	

ATV312H U55M3, U75M3, U55N4, U75N4

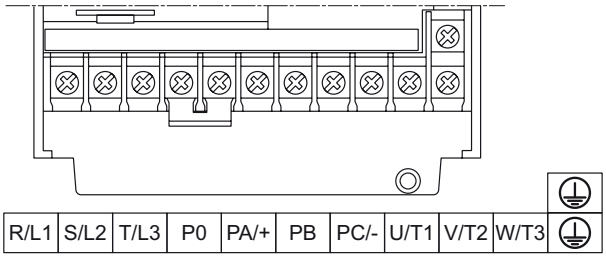

ATV312H D11M3, D15M3, D11N4, D15N4

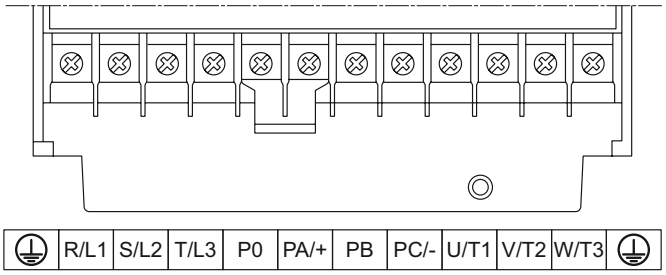

Specification for the power cables

HP/KW	ALTIVAR 312 Solar Variable Speed Drive			Cable Specification		Water Level Sensor (mm)
	200V Single-phase	200V Three-phase	400V Three-phase	Solar Panel	Grid/Motor	
1/0.75	ATV312H075M2 412	ATV312H075M3 412	ATV312H075N4 412	PVC sheathed non-armoured flexible 2 core 6 Sq.mm multistrand copper wire cable	PVC sheathed non-armoured flexible 4 core (3 phase) / 3 core (single phase), 6 Sq.mm multistrand copper wire cable as per IS 8130	6 Dia.
1.5/1.1	ATV312HU11M2 412	ATV312HU11M3 412	ATV312HU11N4 412			
2/1.5	ATV312HU15M2 412	ATV312HU15M3 412	ATV312HU15N4 412			
3/2.2	ATV312HU22M2 412	ATV312HU22M3 412	ATV312HU22N4 412			
4/3		ATV312HU30M3 412	ATV312HU30N4 412			
5/4		ATV312HU40M3 412	ATV312HU40N4 412	PVC sheathed non-armoured flexible 2 core 10 Sq.mm multistrand copper wire cable	PVC sheathed non-armoured flexible 4 core (3 phase) 10 Sq.mm multistrand copper wire cable as per IS 8130	
7.5/5.5		ATV312HU55M3 412	ATV312HU55N4 412			

Power terminals of the Solar Drive Enclosure

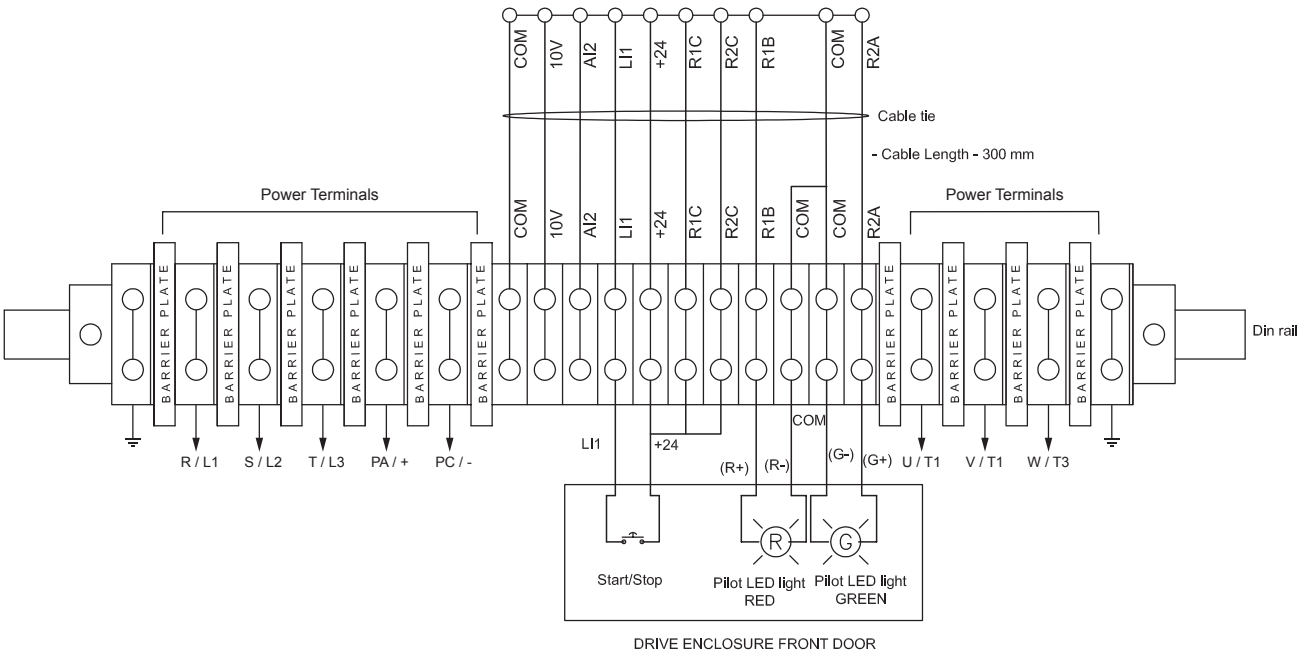

1.4 Connection from different glands

Identify the glands on the bottom side of the Solar Drive Enclosure

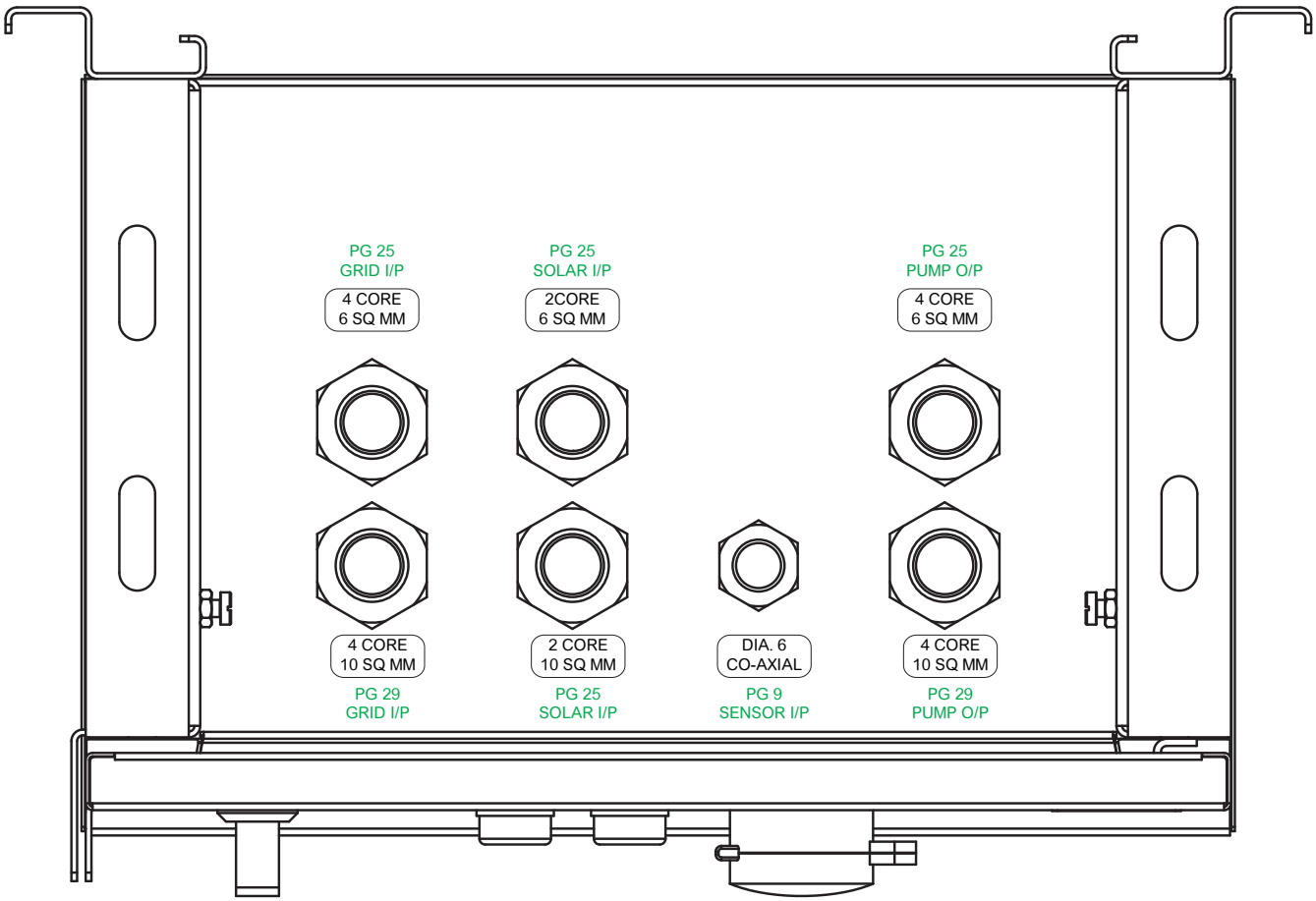

⚠ WARNING

ISOLATION OF SOLAR PANEL ARRAY

Switch off the power from solar panel array while making connection to the solar drive enclosure.

CONNECTION TO POWER TERMINALS

DO NOT connect the solar panel input and the grid supply simultaneously.

Failure to follow these instructions can result in death, serious injury, or equipment damage.

Procedure for cabling inside the gland

1. Unscrew the gland from the bottom of the enclosure.

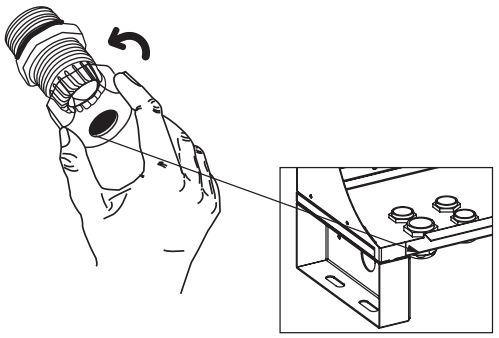

2. Remove the rubber part which is inside the gland cap.

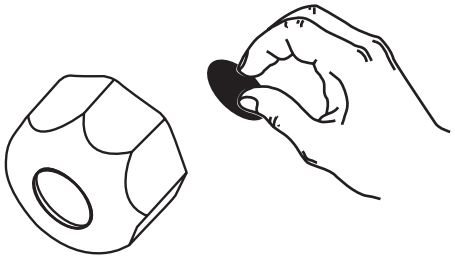

3. Insert the cable into the gland from the bottom.

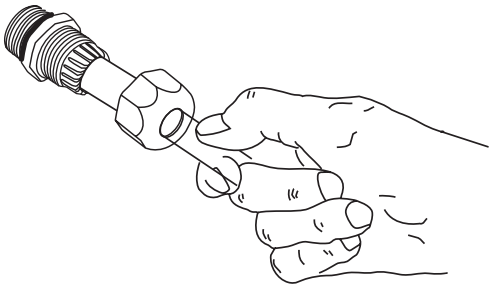

4. Tighten the screw from the bottom of the enclosure.

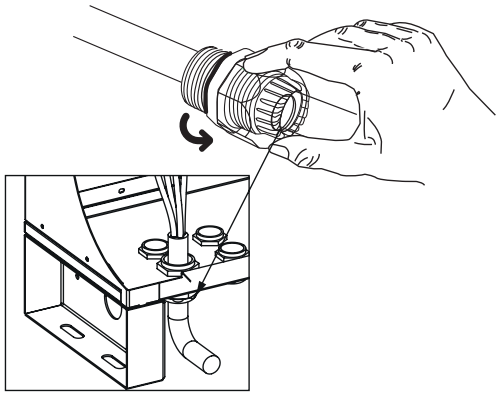

1.5 External Wiring

a) Single-phase grid supply

Connection from single-phase grid supply to the terminal block.
Connection from terminal block to the ATV312 Solar Drive.

Applicable drives: ATV312H U11M2, U15M2, U22M2,
ATV312H0●●M2

Connection diagram:

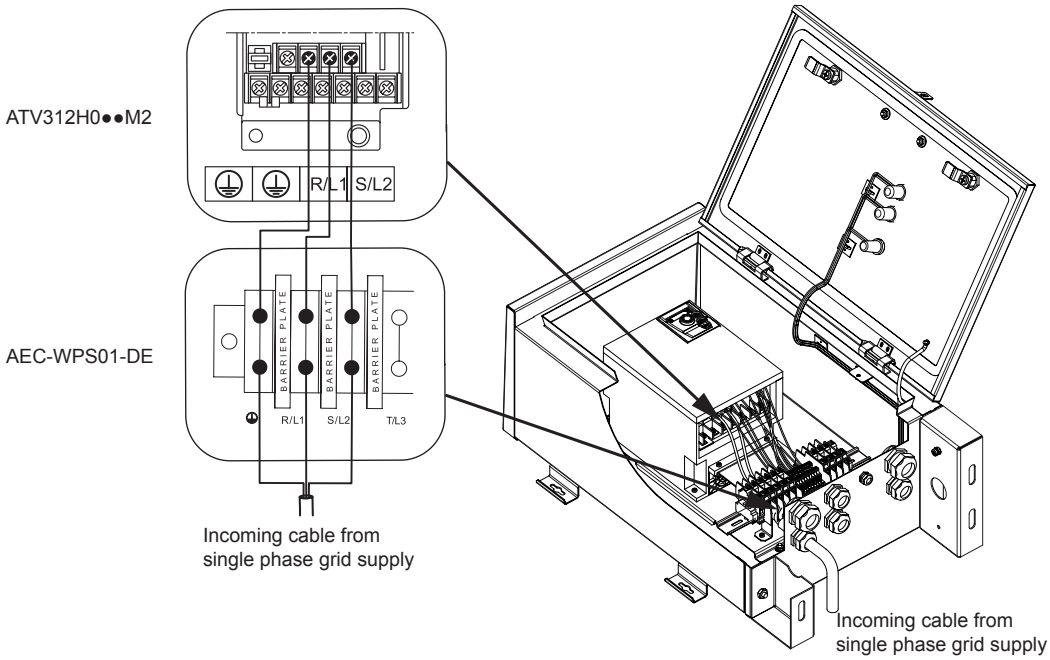

Wiring diagram:

Solar Drive Enclosure (AEC-WPS01-DE)

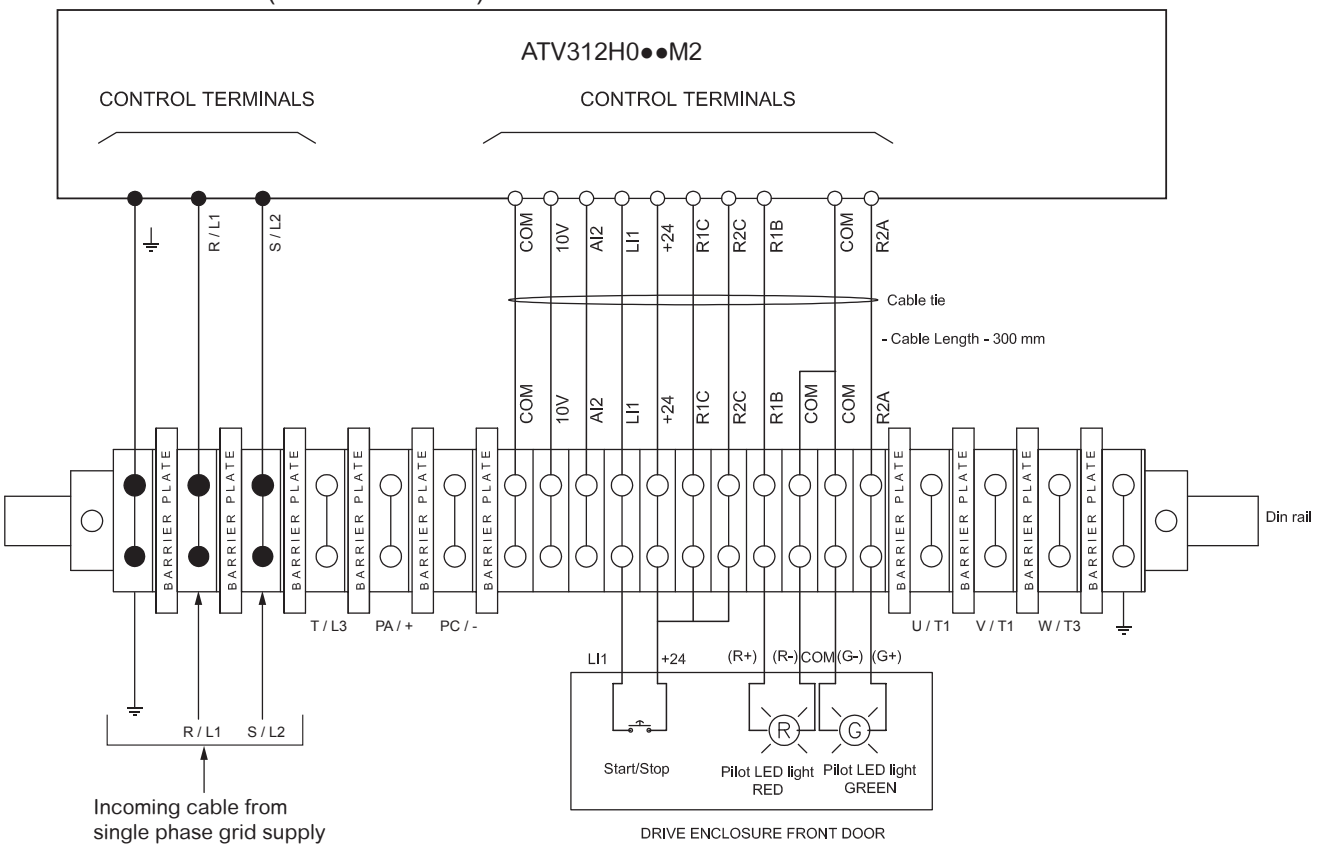

Note: Refer to page 14 for the arrangement of the power terminals for the applicable drives.

b) 3-Phase grid supply

Connection from 3-phase grid supply to the terminal block.
Connection from terminal block to the ATV312 Solar Drive.

Applicable drives: ATV312H U11M3 to U40M3, 0●●N4, U11N4 to U40N4
ATV312H0●●M3
ATV312H U55M3, U75M3, U55N4, U75N4
ATV312H D11M3, D15M3, D11N4, D15N4

Connection diagram:

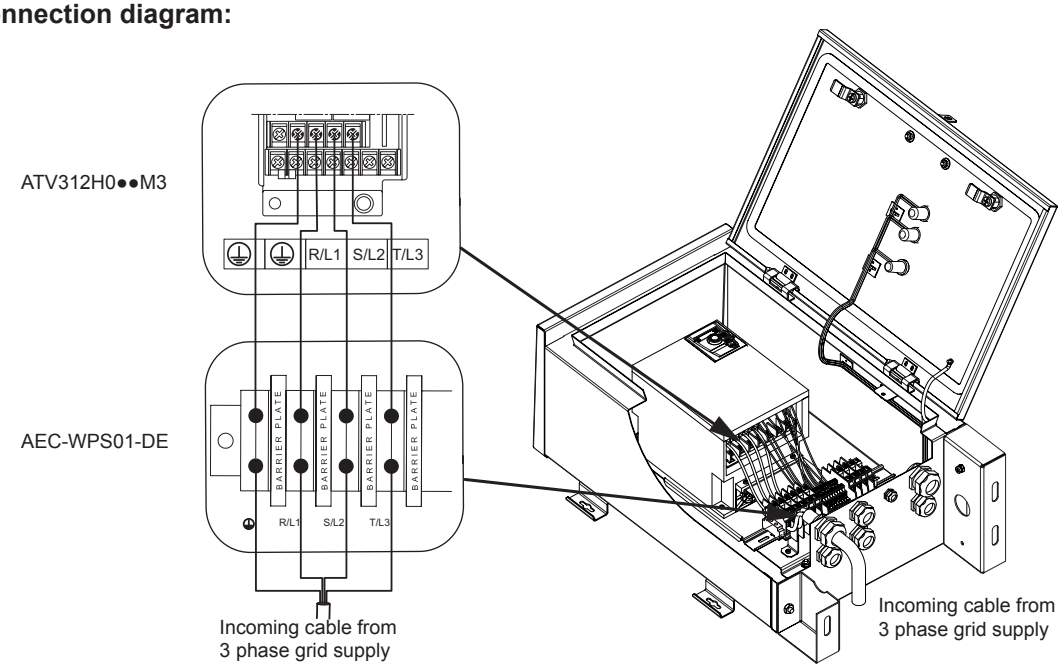

Wiring diagram:

Solar Drive Enclosure (AEC-WPS01-DE)

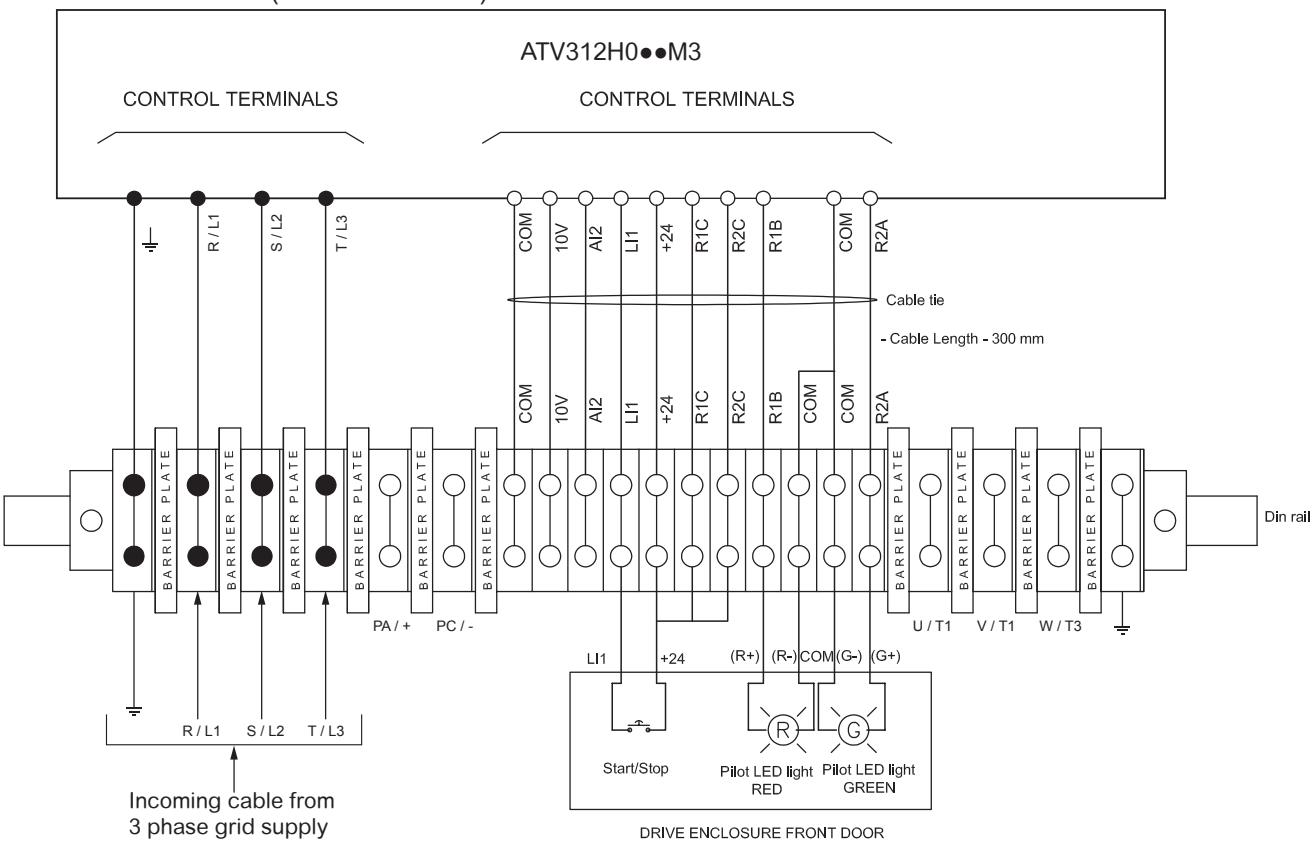

Note: Refer to page 14 -15 for the arrangement of the power terminals for the applicable drives.

c) Solar panel connection

Connection from solar panel array to the terminal block.
Connection from terminal block to the ATV312 Solar Drive.

Applicable drives: ATV312H U11M3 to U40M3, 0●●N4, U11N4 to U40N4
ATV312H0●●M3
ATV312H U55M3, U75M3, U55N4, U75N4
ATV312H D11M3, D15M3, D11N4, D15N4

Connection diagram:

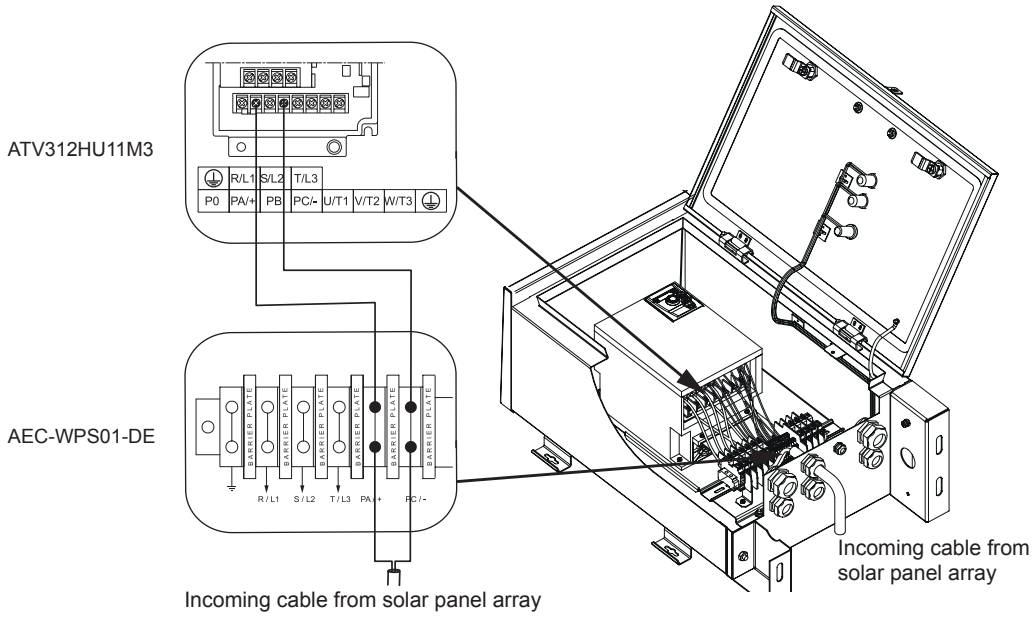

Wiring diagram:

Solar Drive Enclosure (AEC-WPS01-DE)

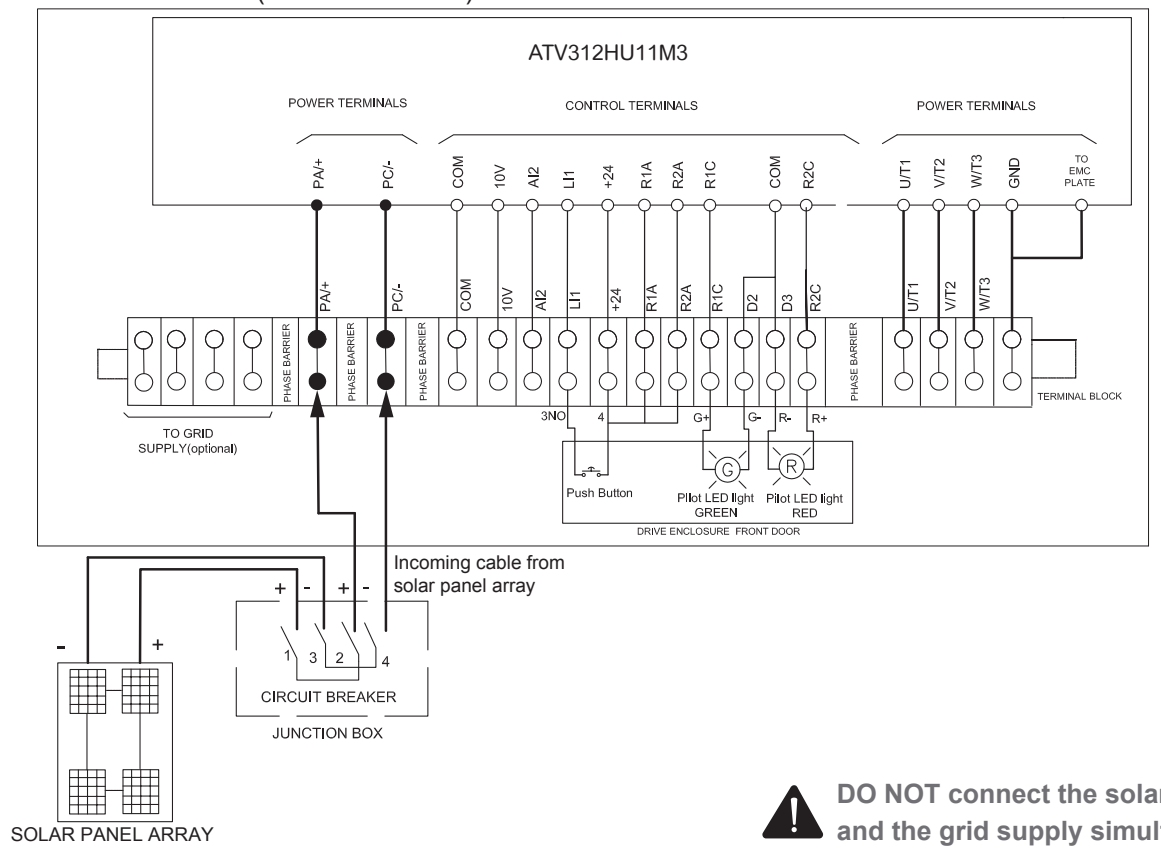

DO NOT connect the solar panel input and the grid supply simultaneously.

Note: Refer to page 14-15 for the arrangement of the power terminals for the applicable drives.

d) 3 phase AC motor connection

Connection from ATV312 solar drive to terminal block.
Connection from terminal block to 3-phase AC motor.

Applicable drives: ATV312H U11M3 to U40M3, 0●●N4, U11N4 to U40N4
ATV312H0●●M3
ATV312H U55M3, U75M3, U55N4, U75N4
ATV312H D11M3, D15M3, D11N4, D15N4

Connection diagram:

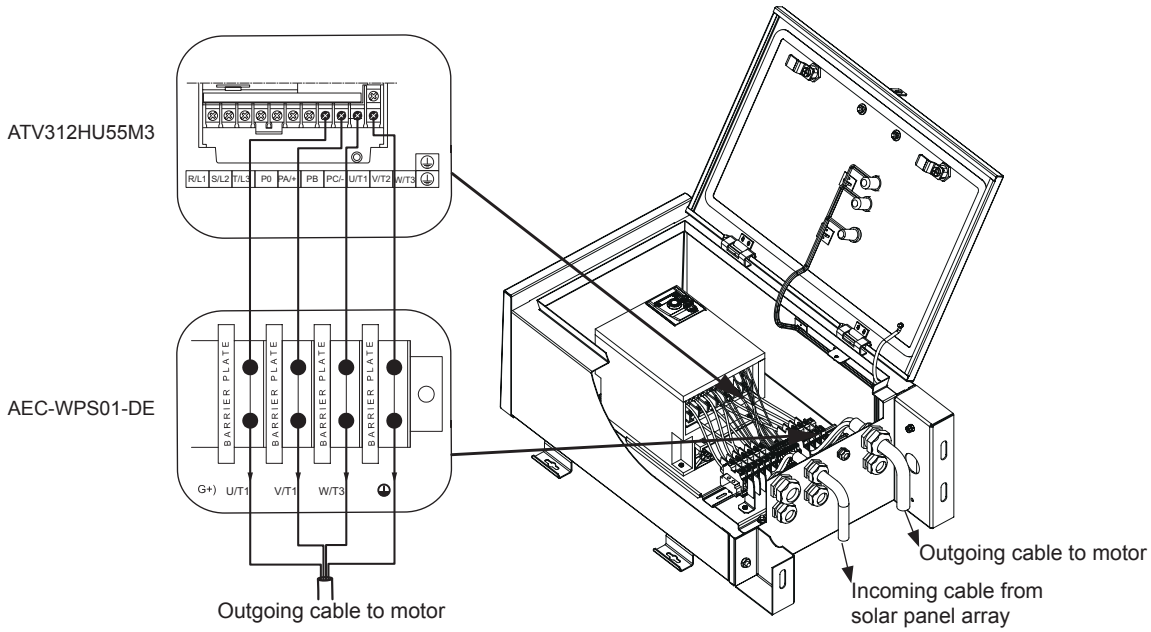

Wiring diagram:

Solar Drive Enclosure (AEC-WPS01-DE)

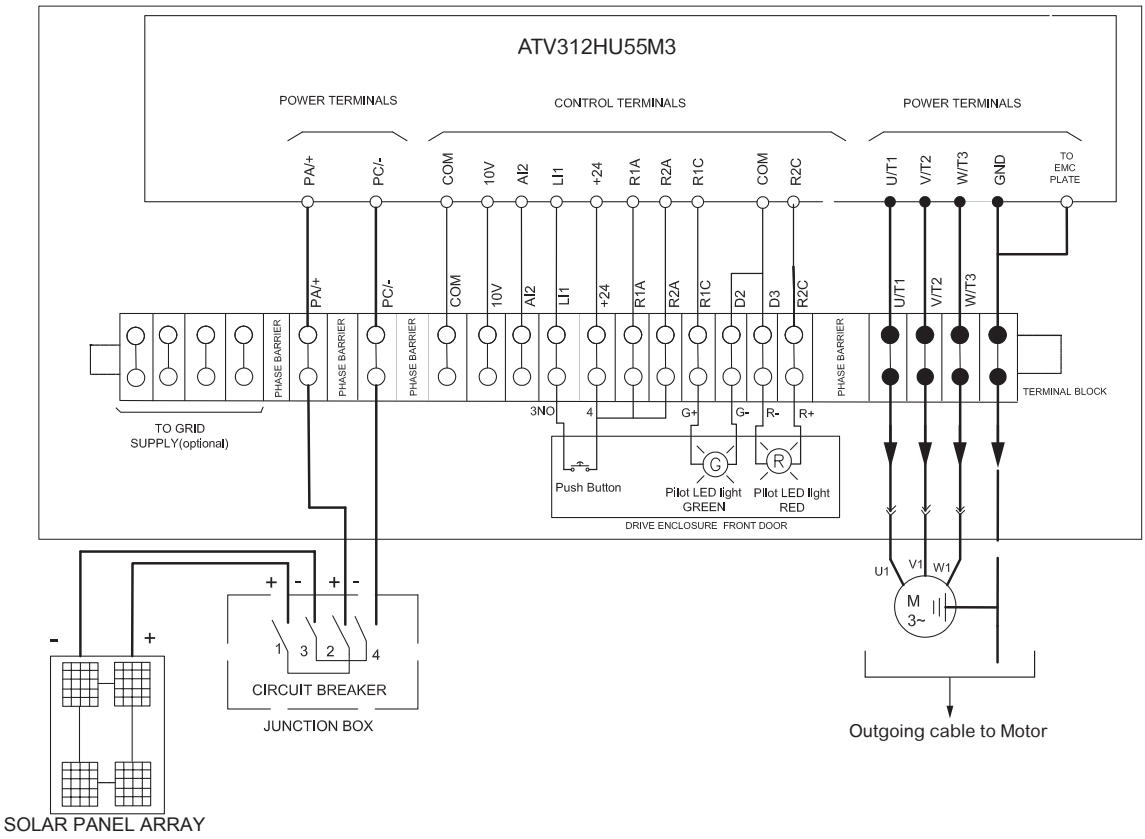

Note: Refer to page 14-15 for the arrangement of the power terminals for the applicable drives.

e) Connection to water level sensor

Connection from water level sensor to the terminal block.
Connection from terminal block to the ATV312 Solar Drive.

Connection diagram:

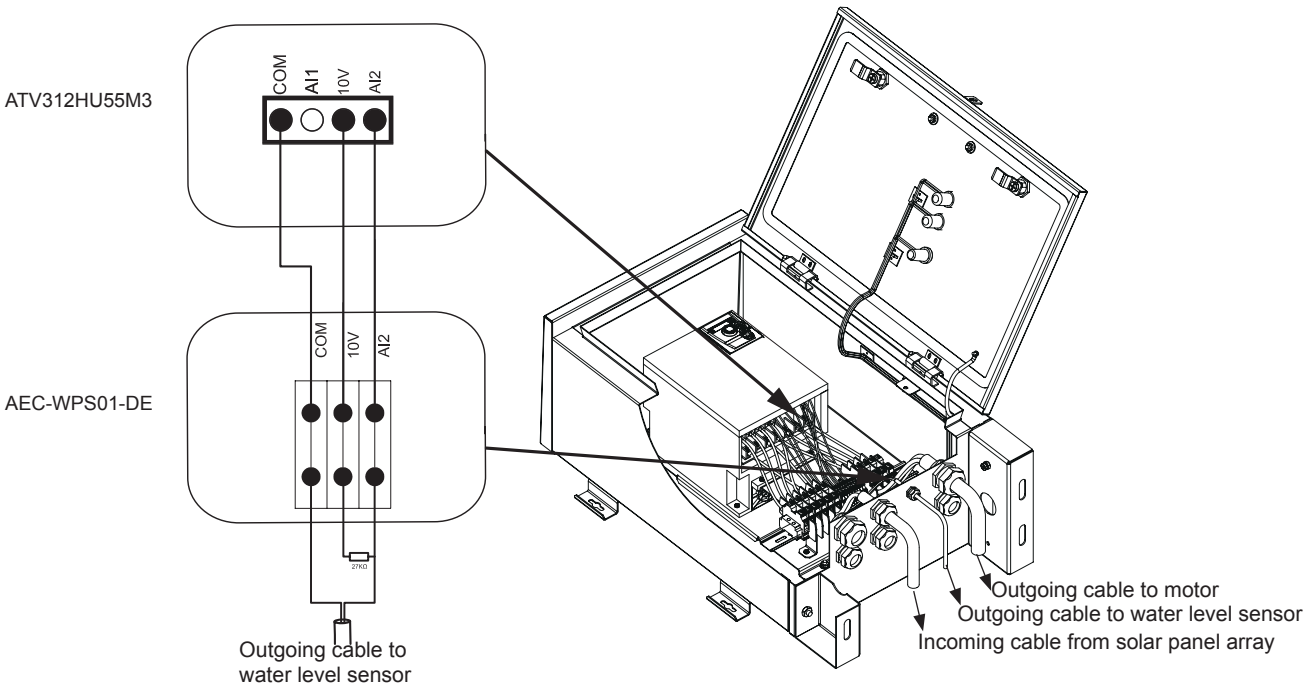

Wiring diagram:

Solar Drive Enclosure (AEC-WPS01-DE)

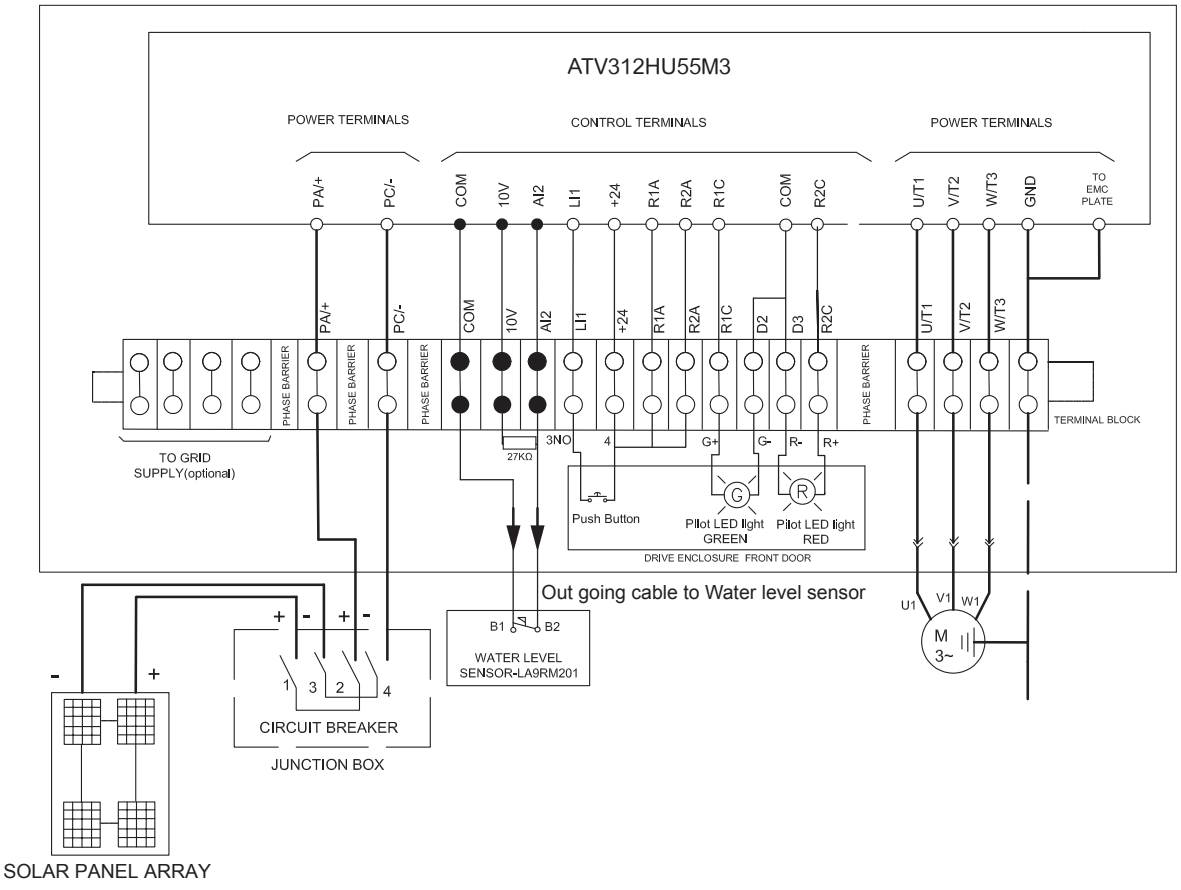

Note: 27kOhm resistor needs to be purchased locally when the water level sensor is connected.

f) Connection from the earthing point of the enclosure to the ground

The image shows the connection from solar panel array, water level sensor, the motor and the earthing connection to the solar enclosure.

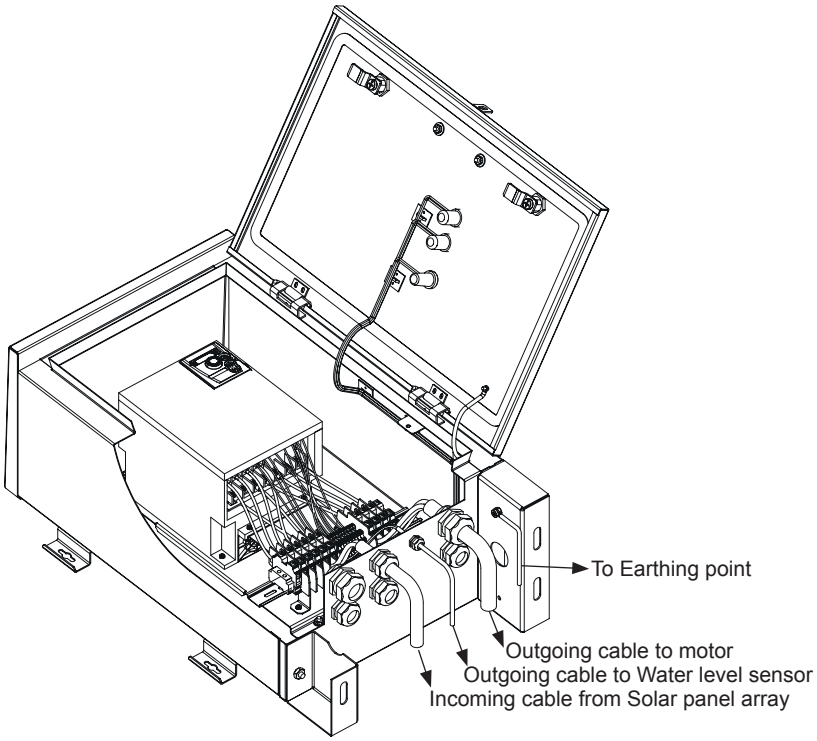

Wiring diagram:

Solar Drive Enclosure (AEC-WPS01-DE)

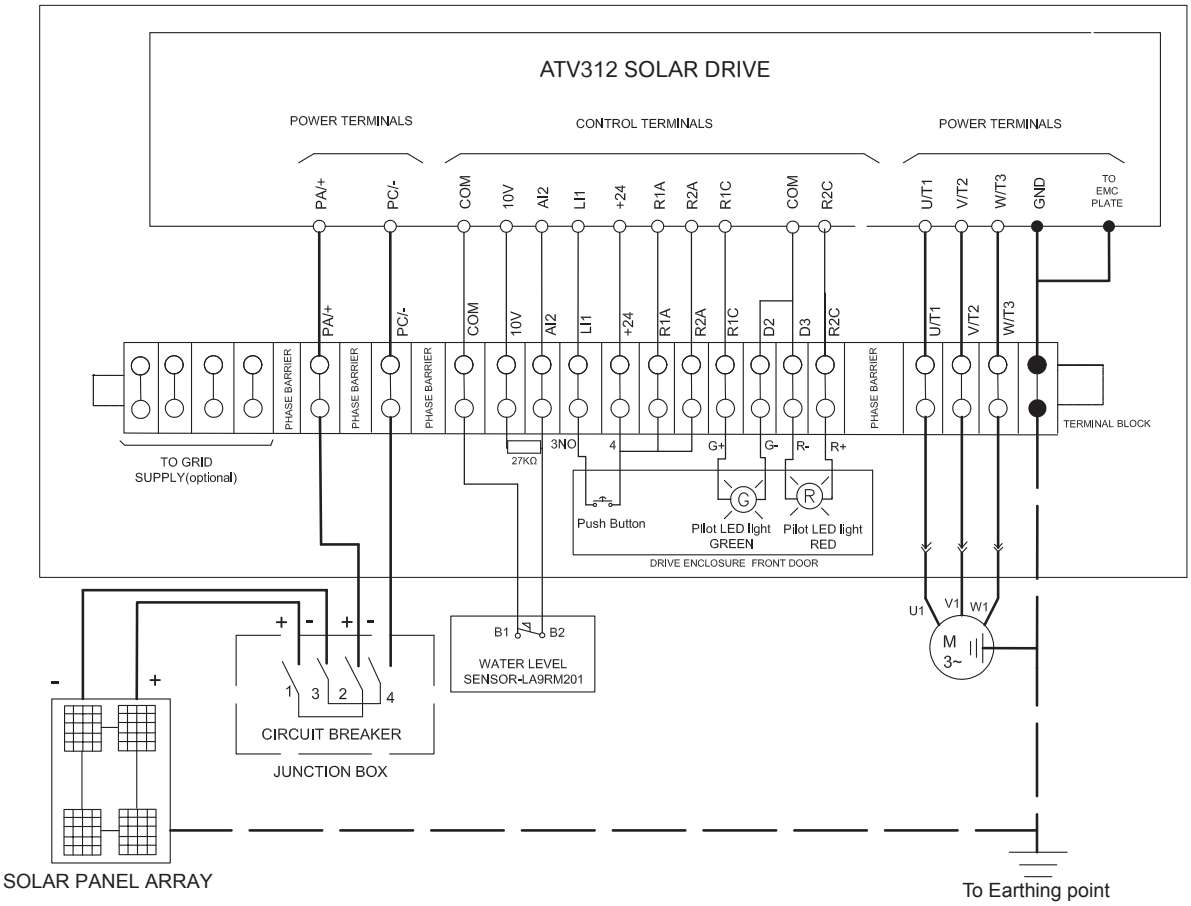

Replace the plate inside the drive and close the drive lid cover.

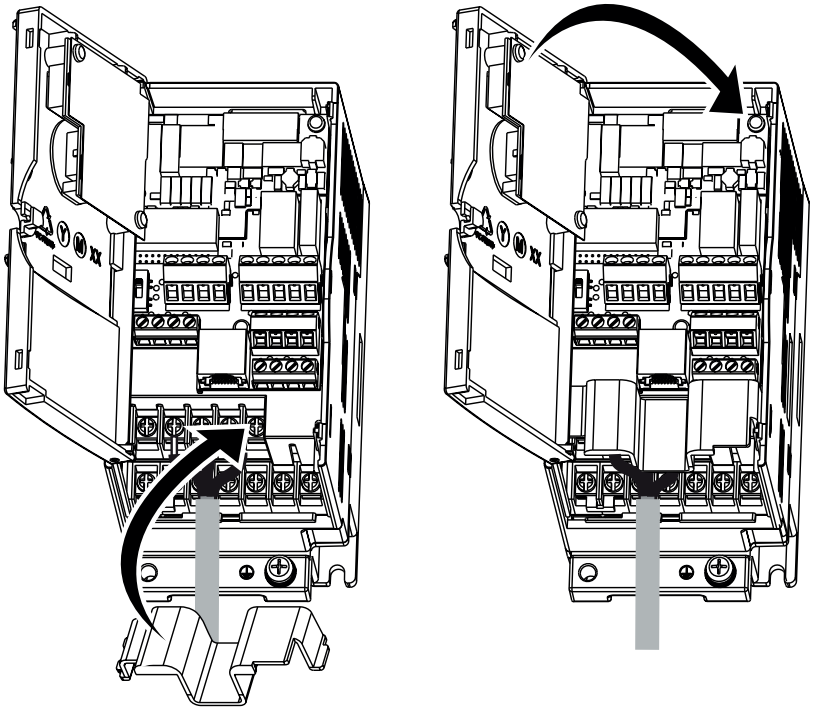

Replace the acrylic sheet inside the Solar drinve enclosure

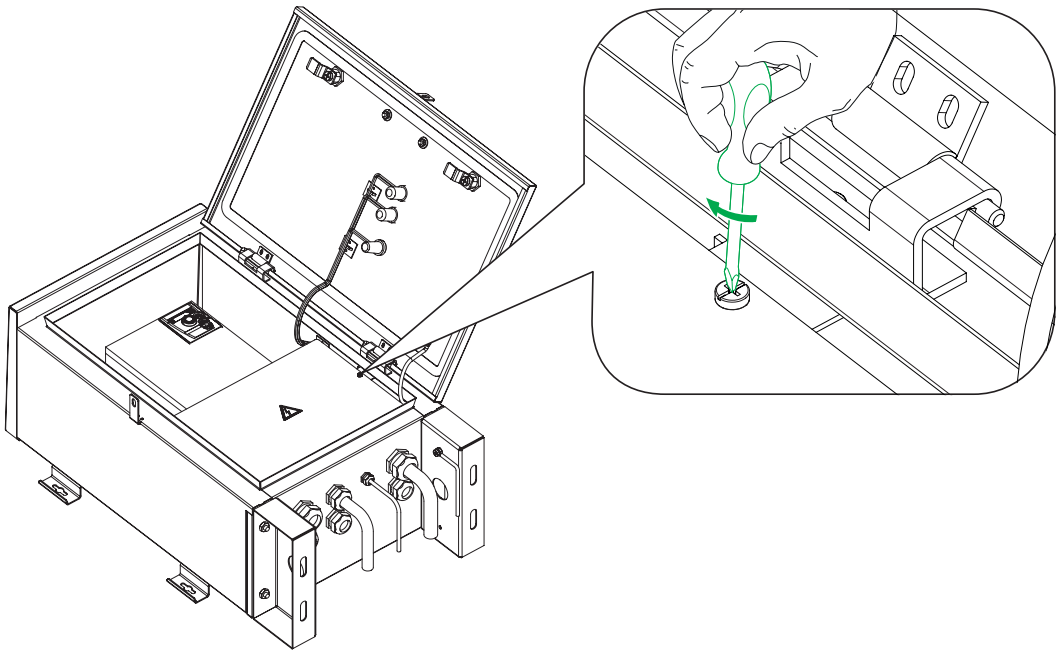

2. Functionality of Indicators and Push buttons

LED Indications on the Enclosure

• Pump ON Indicator (GREEN LED): It glows when the pump is running.

• Fault Indicator (RED LED): It glows when the system is in faulty condition.

• Start/Stop: Switch button to Start/Stop the pump.

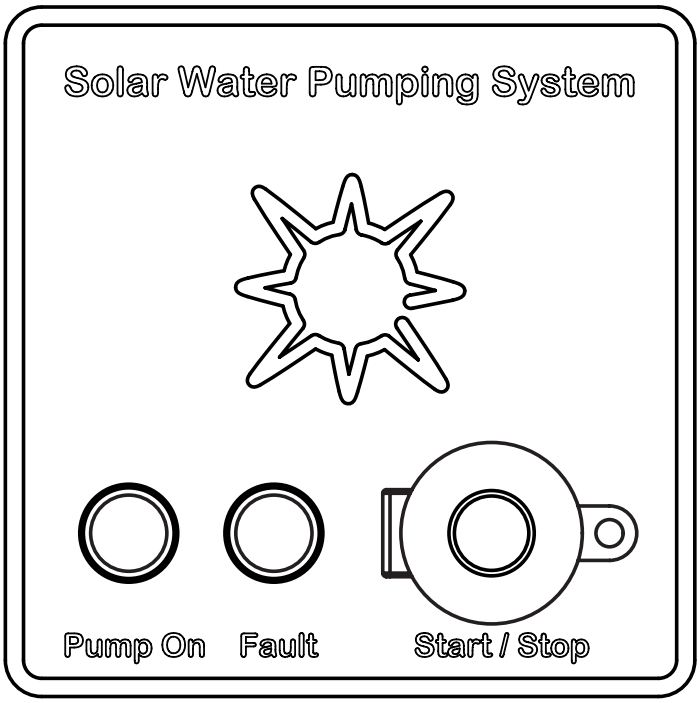

LED Status	Description
GREEN indicator glowing 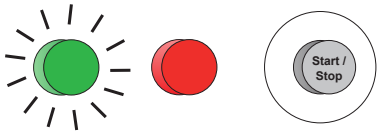	Pump is running
RED indicator glowing 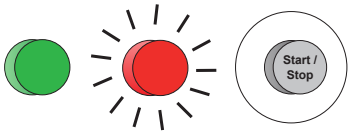	- No water in the well - Sensor wires are cut - Any other Internal faults
GREEN and RED indicators are OFF 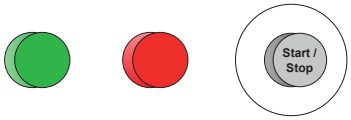	-Tank full - Low light - No run order (ON/OFF switch is OFF position)

Note: The system is automatic; DO NOT TOUCH the push button during the operation.

3. Get Started

Solar Water Pumping System Wiring Diagram

Ensure that the wiring diagram for solar water pumping syatem is as shown below before configuring the ATV312 Solar drive.

Solar Drive Enclosure (AEC-WPS01-DE)

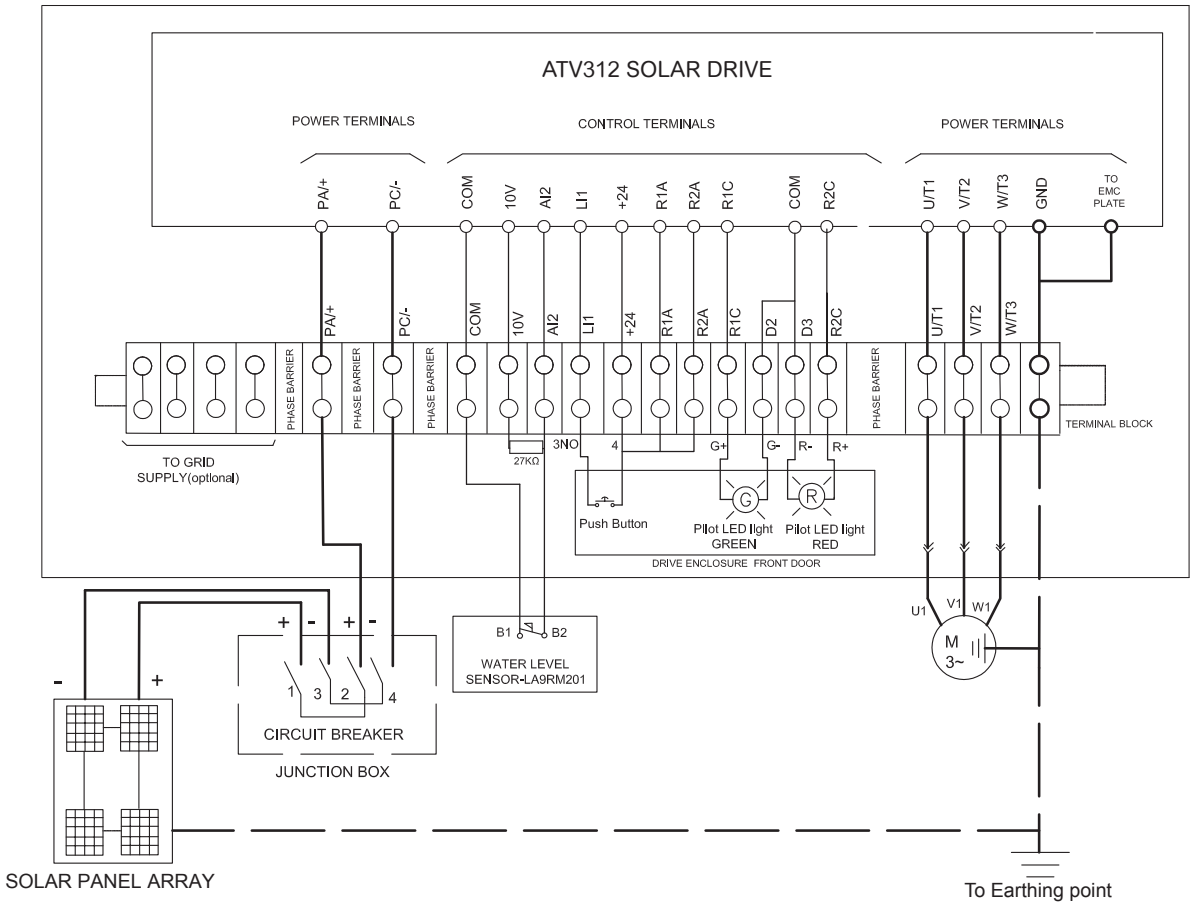

NOTE: 27kOhm resistor needs to be purchased locally when the water level sensor is connected.

Configuring the drive

Apply power to the drive

- Switch ON the circuit breaker.
- At first power up, drive displays rdY, after pushed drive displays PU

Set pump parameters

- See on the motor Nameplate to set the following parameters in drC- menu.

Menu	Code	Description	Factory setting	Customer setting
drC- [MOTOR CONTROL]	bFr	[Standard mot. freq]: Standard motor frequency on motor nameplate (Hz)	50.0	
	UnS	[Rated motor volt.]: Nominal motor voltage on motor nameplate (V)	drive rating	
	FrS	[Rated motor freq.]: Nominal motor frequency on motor nameplate (Hz)	50.0	
	nCr	[Rated mot. current.]: Nominal motor current on motor nameplate (A)	drive rating	
	nSP	[Rated motor speed]: Nominal motor speed on motor nameplate (rpm)	drive rating	
	COS	[Motor 1 Cosinus Phi.]: Nominal motor cos φ on motor nameplate	drive rating	

- Set tUn parameter to YES.

Menu	Code	Description	Factory setting	Customer setting
drC- [MOTOR CONTROL]	tUn	[Auto-tuning]: Auto-Tunning for UnS, FrS, nCr, nSP, nPr and COS	no	

⚠⚠ DANGER

HAZARD OF ELECTRIC SHOCK OR ARC FLASH

- During auto-tuning, the motor operates at rated current.
- Do not service the motor during auto-tuning.

Failure to follow these instructions will result in death or serious injury.

⚠ DANGER

UNINTENDED EQUIPMENT OPERATION

- The Nominal Motor Parameters UnS, FrS, nCr, nSP, nPr and COS must be correctly configured before starting auto-tuning.
- If one or more of these parameters is modified after auto-tuning has been performed, tUn will return to no and the procedure must be repeated.

Failure to follow these instructions will result in death or serious injury.

Check the pump running way (Reverse or forward).

1. Switch on Start button to start the pump.
2. Do a visual check on the pump running way.
3. Invert 2 phases on the pump connection: Switch off Start button and Switch off the circuit breaker
   Follow safety message in section before you begin Invert pump wiring U and V
4. Switch on the circuit breaker.
5. Switch on Start button.
6. Compare the water flow between the 2 wiring possibilities. Keep the best wiring configuration.

Configuring the indicators

The flow diagram shows to set the parameters assigned to the relays R1 and R2. During the pump operation, observe if the pump ON green led is glowing continuously.

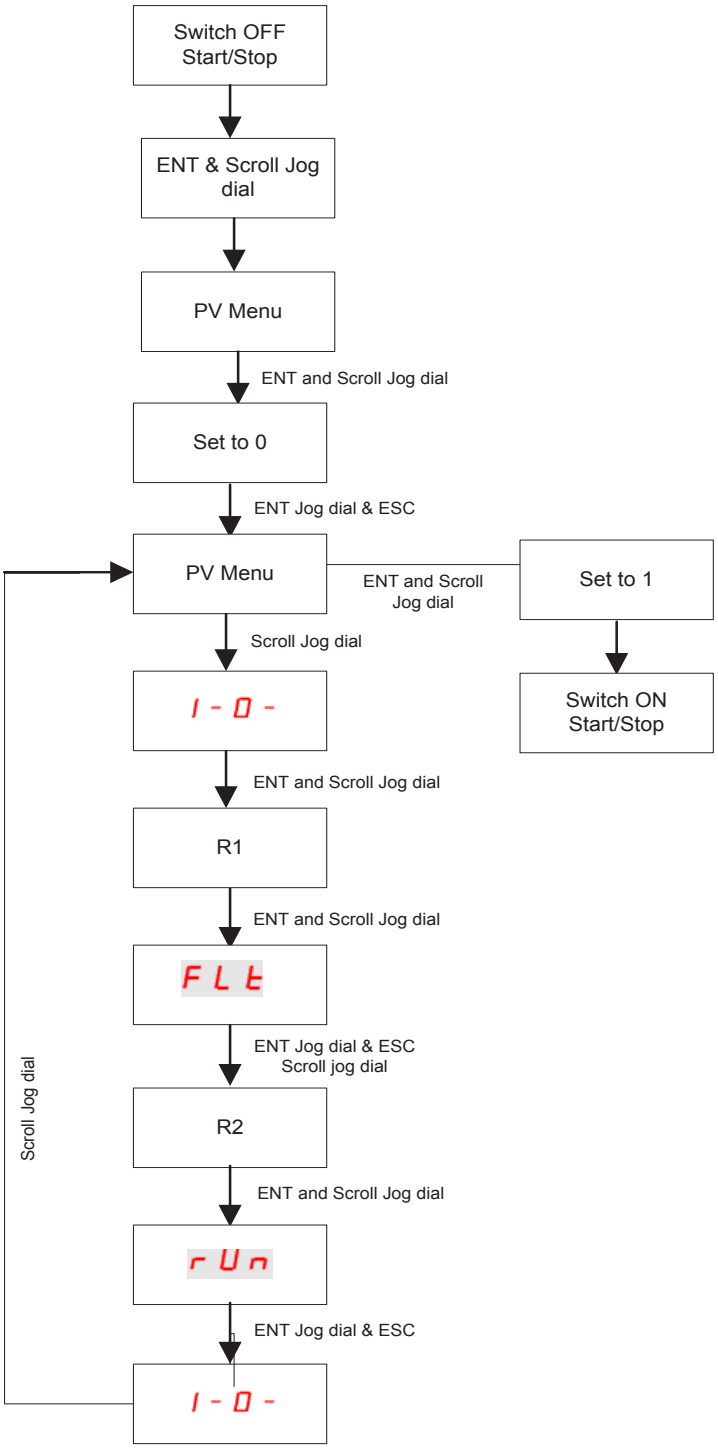

The below table shows I-O- menu and the parameters.

I-O- menu	rrS (Reverse assign)
	CrL3 (AI3 min. value)
	rrS (Reverse assign)
	AO1t (AO1 Type)
	dO (Analog/logic output)
	r1 (R1 Assignment)
	r2 (R2 Assignment)
	SCS (Saving config)
	CFG (Macro Configuration)
	FCS (Restore config)

Define the minimum pump speed

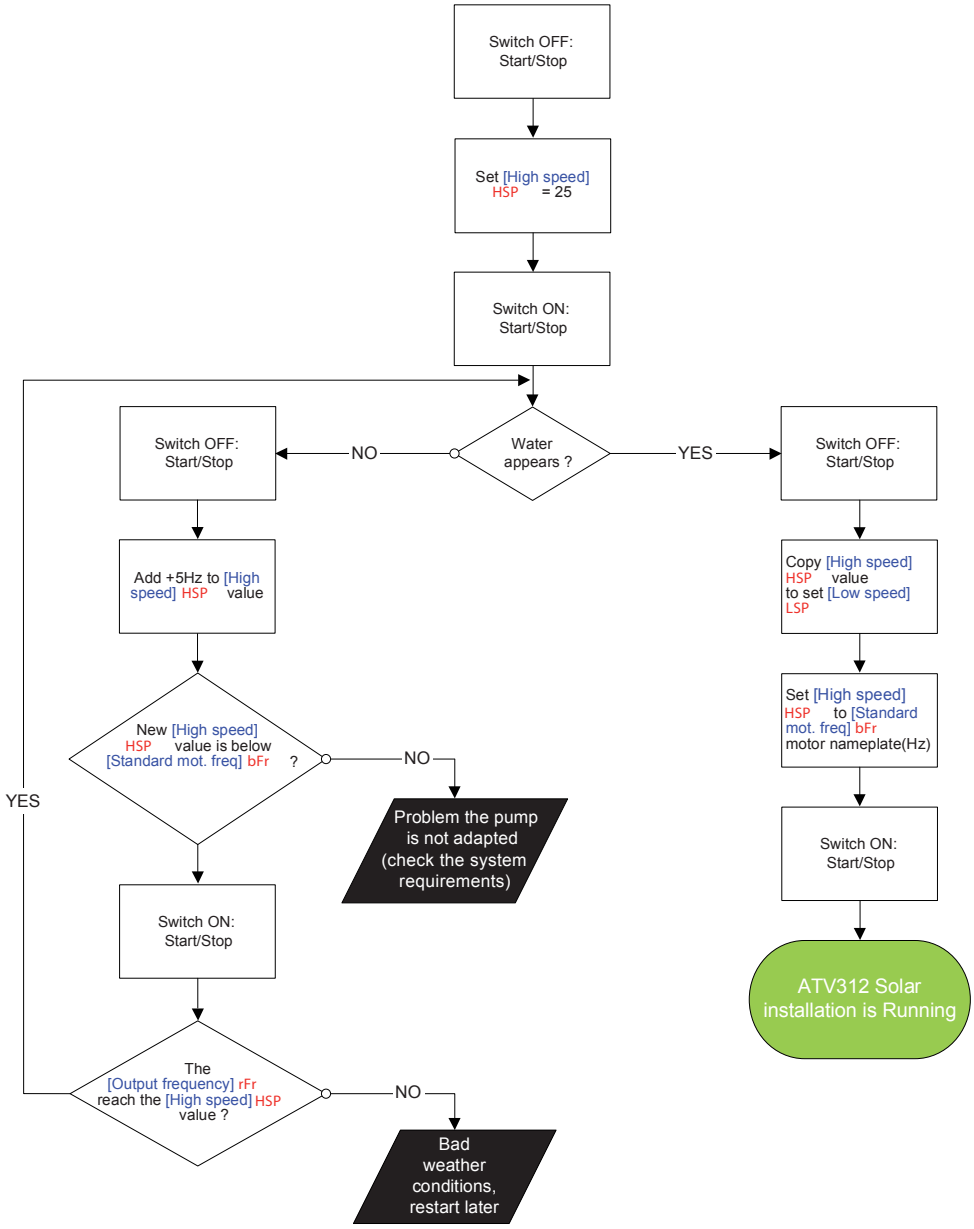

Set the underload function

- Set [State Unld. function] SLUL to 0 (AUtO)

Menu	Sub-Menu	Code	Description	Setting
SUn - [Sun]	LP - [Liquid Probe]	SLUL	[State Unld. function]: Set [State Unld. function] SLUL to 0 (AUtO)	0 (AUtO)

- Switch ON Start button.

- With good weather conditions wait until the drive reach his maximum speed ([Hight speed] HSP value)

- Prior to finish the commissioning of the system, check that [State Unld. function] SLUL reached [Done] dOnE

Menu	Sub-Menu	Code	Description	Setting
SUn - [Sun]	LP - [Liquid Probe]	SLU L	[State Unld. function] Check that SLUL reached [Done] dOnE	dOnE

⚠ DANGER

HAZARD OF ELECTRIC SHOCK, EXPLOSION, OR ARC FLASH

• DO NOT connect the power terminals to the solar panel array and grid supply simultaneously.

Failure to follow these instructions will result in death or serious injury.

NOTICE

RISK OF DAMAGE TO THE DRIVE

• Prior to connect the photovoltaic arrays to the system, respect the polarity PA/+ and PC/-.

Failure to follow these instructions can result in equipment damage.

⚠ CAUTION

EQUIPMENT GROUNDING

• Ensure common ground for solar panel, motor, ATV312 Solar drive and solar drive enclosure before supplying the power from solar panels or grid.

• Ensure the entire system grounding.

Failure to follow these instructions can result in injury or equipment damage.

The drive is mounted inside the enclosure. Ensure that all the terminals are connected from the drive to the Solar Drive Enclosure.

Place the drive enclosure vertically and mount the enclosure on the wall or floor as shown.

Mounting the solar drive enclousre on Wall

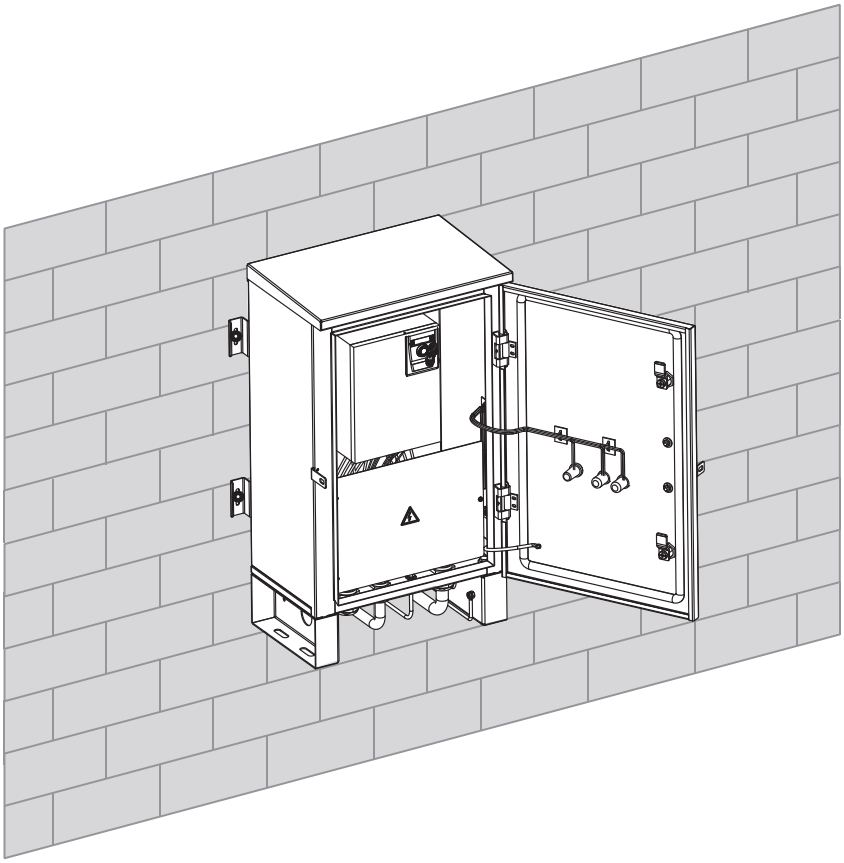

Mounting the solar drive enclousre on Floor

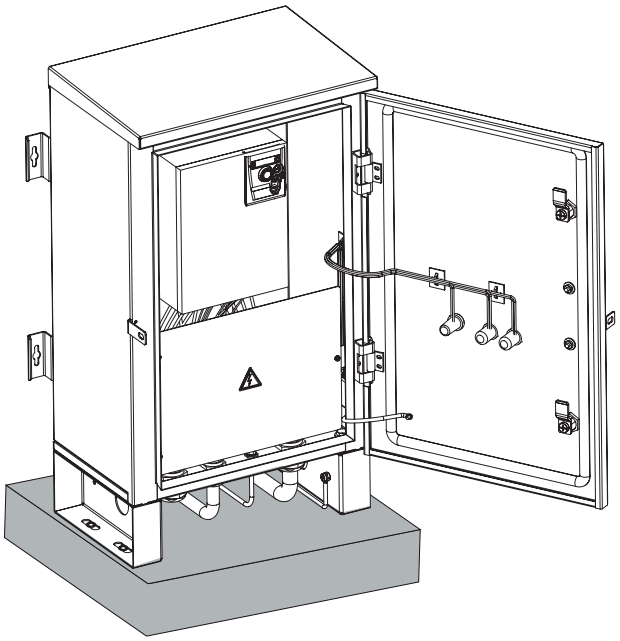

Lock the enclosure and safeguard the industrial keys.

Press Start button to run the pump.

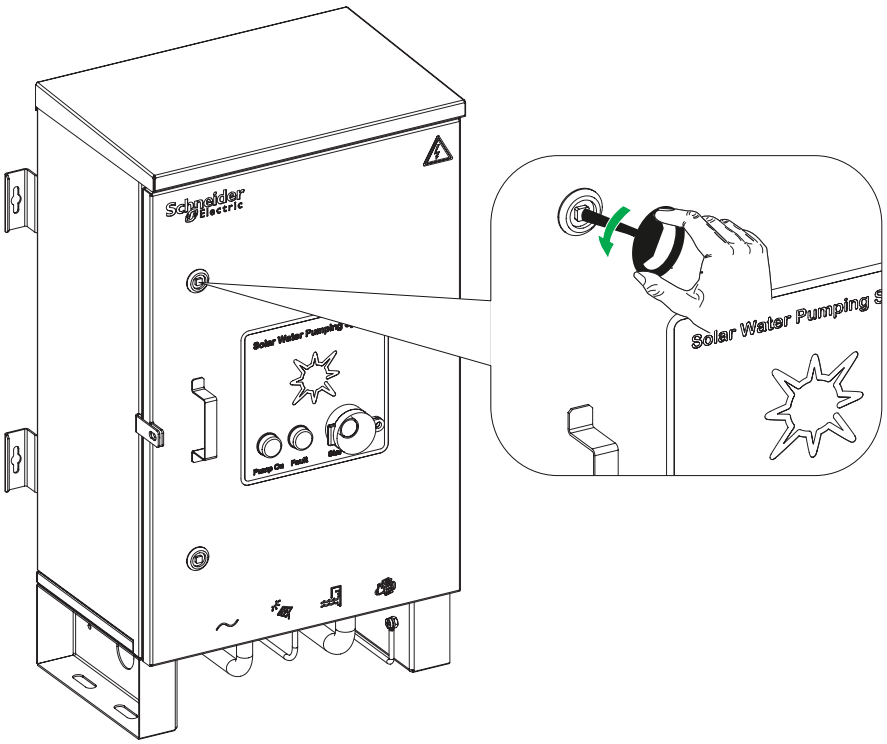

4. Troubleshooting

Problem	Possible Cause	Action
Pump Not Running	• Connection is incorrect. • Drive is not configured as per the motor name plate details. • Drive is switched OFF • Cloudy Weather	• Check the connection as per wiring diagram. • Ensure that the drive is configured as per the flow chart given in the section **Get Started**. • Check if Start / Stop switch is in Start position. • Check the photovoltaic array voltage meets the required Vmpp; if not wait for wait for good sunshine.
Drive not working	• Drive selection is incorrect. • There is no power supply to the drive.	• Ensure that the drive is selected as per the pump requirement. • Ensure that there is enough voltage to power the drive. • Ensure Drive Enclosure Start/ Stop switch is in Start position. • Ensure that the drive enclousre isolation switch for PV array is in ON position.
Pump operates for some time and stops	• Drive detected over load condition • Pump is blocked • Pump draws excessive current • Change in weather • Drive is not configured as per the pump name plate	• Wait for the drive to get cooled before restart. • Check if there is any blockage in the pipe. • Check if the motor is in good condition. • Wait for good sunshine. • Ensure that the drive is configured as per the flow chart given in the section **Get Started**.

For more information on troubleshooting, refer to ATV312 Simplified Manual (S1B63488).

Glossary

Term	Definition
AOC	Analog Output Current
AOV	Analog Output Voltage
DC	Direct Current
Drive	Variable Speed Drive
MPPT	Maximum Power Point Tracking
PID	Proportional –Integral-Derivative
PV	Photovoltaic
Vmpp	Voltage at the Maximum Power Point
Voc	Open Circuit Voltage

To know more:
Schneider-electric.com/bipbop

Schneider Electric