KNOCKOUTS						
SYMBOL	A	B	D	E	F	G
IN	.50	.75	1.25	1.50	2.00	2.50
MM	13	19	32	38	51	64

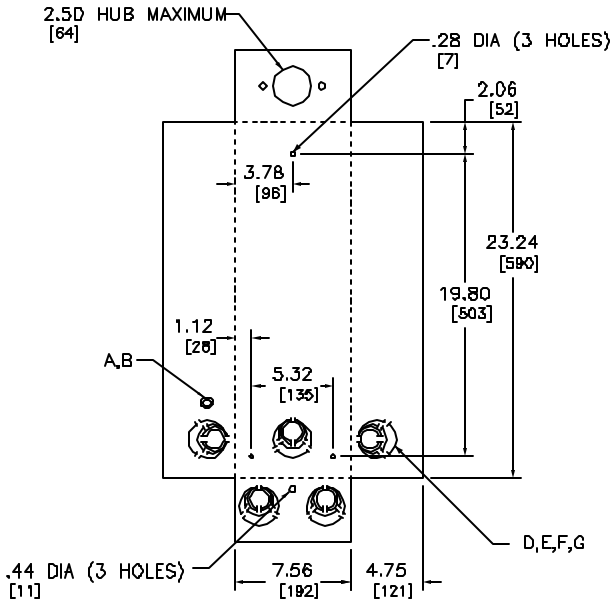

DUAL DIMENSIONS: INCHES / MILLIMETERS

SERVICE	AMPERE RATING	RAINPROOF NEMA TYPE 3R	CIRCUIT BREAKER (ORDER SEPARATELY)			NEUTRAL ASSEMBLY TERMINAL LUG WIRE SIZE AWG	
			CATALOG NUMBER	UL LISTED INTERRUPTING RATING RMS SYM. AMPERES	TERMINAL LUG WIRE SIZE AWG AL/CU	NEUTRAL TERMINALS	GROUNDING TERMINALS▲
S N 240VAC	100–200A	Q2–2200NRB	Q2L Q2L–H	10,000 22,000	#4–30D	#4–250 AL/CU	#12–1/0 AL OR #14–1/0 CU
	70–225A		QBL QDL QCL QJL	10,000 25,000 65,000 100,000			

NOTES:
FINISH – GRAY BAKED ENAMEL ELECTRODEPOSITED OVER CLEANED PHOSPATIZED STEEL.
UL LISTED – FILE E-136861
NEUTRALS – INSULATED GROUNDABLE.
▲ EQUIPMENT GROUND KIT FACTORY INSTALLED.

QO LOAD CENTERS
RAINPROOF ENCLOSURE
ENCLOSED CIRCUIT BREAKER DEVICES

SQUARE D COMPANY

DWG# NO. 3287