140 DII 330 00 Intrinsically Safe Discrete Input Module

Overview

The Quantum 140 DII 330 00 Intrinsically Safe Discrete Input module provides safe power to dry contact closures e.g., push buttons, selector switches, float switches, flow switches, limit switches, etc., in a hazardous area, and receives the proportional current to indicate an on/off state. The received current is converted into digital signals that is transferred to the PLC.

Agency Approved Wiring Diagrams

The following is a Cenelec certified wiring diagram for this module.

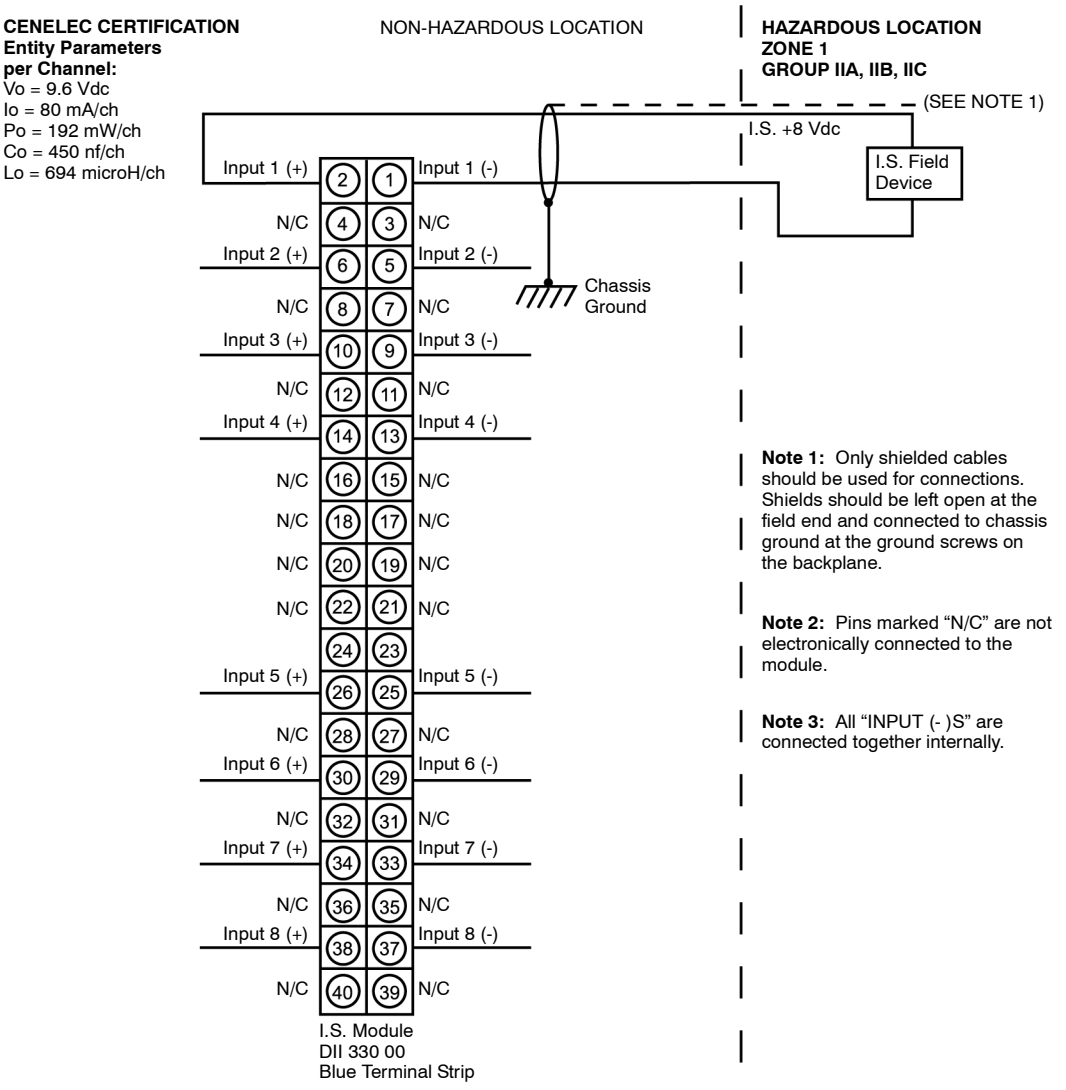

31001365 Rev 00 140 DII 330 00 Wiring Diagram

The following is a CSA certified wiring diagram for this module.

Notes related to CSA certification for this module.

Note 1. Entity parameters per module: V_{oc} = 9.5 V
I_{sc} = 80 mA
C_a = 450 nf
L_a = 694 mH

Note 2. Maximum non-hazardous area voltage must not exceed 250 V.

Note 3. Install in accordance with Canadian Electrical Code, Part I, for installation in Canada.

Note 4. Install in accordance with the NEC (ANSI/NFPA 70) and ANSI/ISA RP 12.6 for installation in the United States.

Note 5. To maintain intrinsic safety, shield for each cable must be grounded and must extend as close to the terminals as possible.

Note 6. Intrinsically Safe (I.S.) cables of one module must be routed separately from I.S. cables of another module.

Note 7. I.S. devices when connected to I.S. terminals must satisfy the following conditions:
V_{oc} < Vmax
I_{sc} < Imax
$C_a > C_i + C_{cable}$
$L_a > L_i + L_{cable}$

Note 8. This module is certified as a component for mounting in a suitable enclosure where the suitability of the final combination is subject to acceptance by CSA or an inspection authority having the jurisdiction.

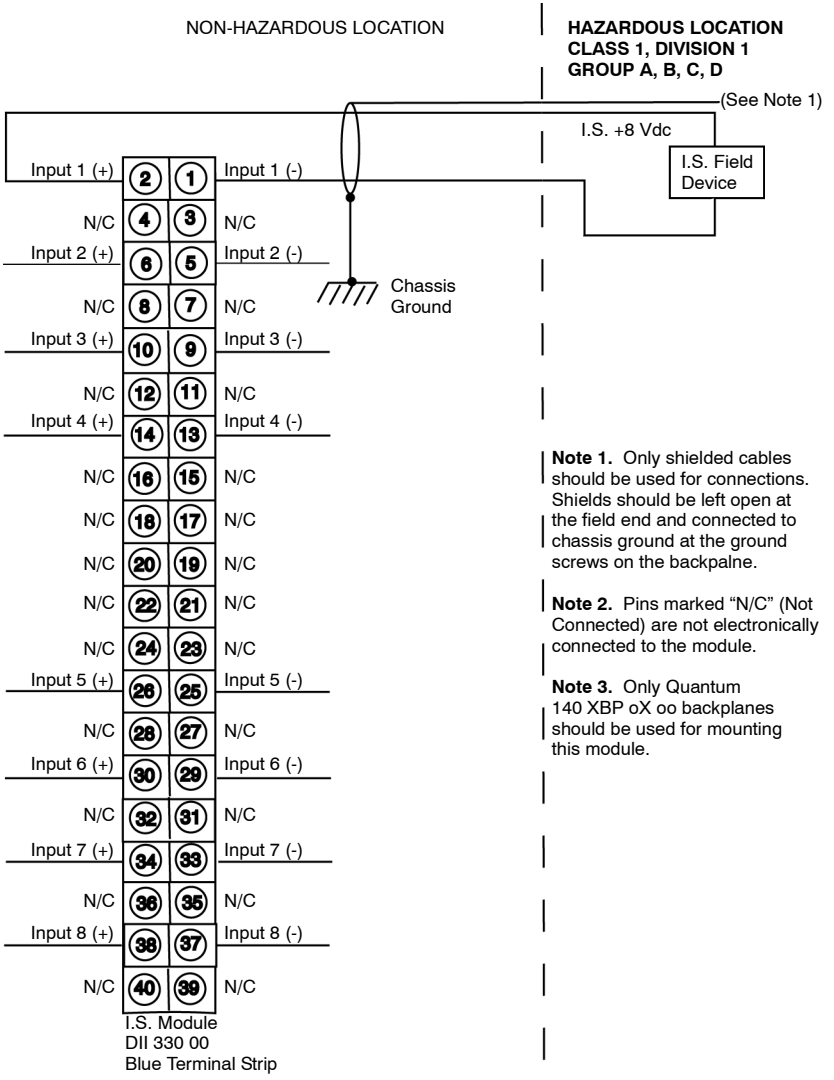

Note 1. Only shielded cables should be used for connections. Shields should be left open at the field end and connected to chassis ground at the ground screws on the backpalne.

Note 2. Pins marked "N/C" (Not Connected) are not electronically connected to the module.

Note 3. Only Quantum 140 XBP oX oo backplanes should be used for mounting this module.

31001365 Rev 00 140 DII 330 00 Wiring Diagram

The following is a FM certified wiring diagram for this module.

Notes Related to FM Certification

This IS field device should meet Note 5 or should be FM approved or connection with IS RTD/TC IN Modules with Concept Parameters listed below. The entity parameters are per Channel.
Voc = 9.6 VDC
Isc = 80 mA/Module
Ca = 450 nf/Ch
La = 0.694 mH/Ch
Po = 192 mW/Module

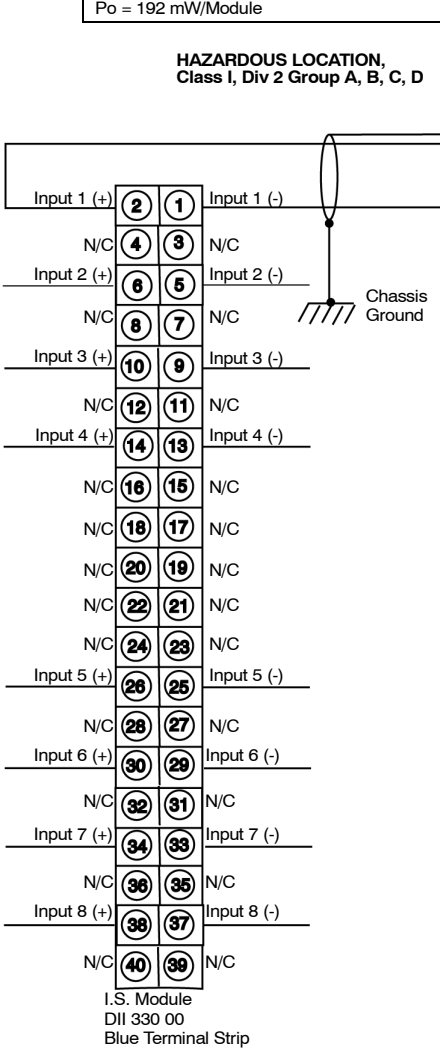

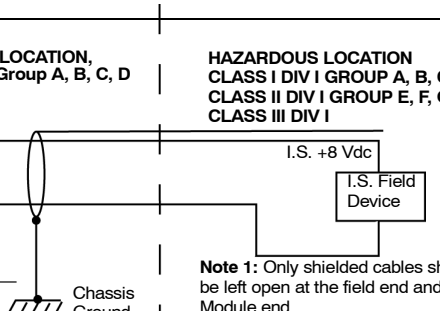

Note 1: Only shielded cables should be used for connections. Shields should be left open at the field end and connected to chassis ground at the Module end.

Note 2: Pins marked N/C are not electronically connected to the Module.

Note 3: Only 140 XBP 0xx 00 backplanes should be used for mounting this module.

Note 4: The Entity Concept allows interconnection of intrinsically safe apparatus with associated apparatus not specifically examined in combination as a system when the approved values of Voc and Isc for the associated apparatus are less than or equal to Vmax and Imax for the intrinsically safe apparatus and the approved values of Ca and La for the associated apparatus must be equal to or are greater than Ci and Li for the intrinsically Safe apparatus plus all cable parameters.
Ca ≥ Ci + Ccable; La ≥ Li + Lcable; Voc ≤ Vmax; Isc ≤ Imax

Note 5: Simple Apparatus is defined as a device which will neither generate nor store more than 1.2V, 0.1A, 20uJ, or 25 mW. For examples switches, Thermocouples, LEDs and RTDs, Etc.

Note 6: Wiring methods must be in accordance with National Electrical Code NFPA 70, Article 504 and ANSI/ISA RP12.6, "Wiring Practices for Hazardous (classified) Locations Instrumentation Part I: Intrinsic Safety".

Note 7: Control room equipment connected to associated apparatus should not use or generate more than 250Vrms.

Note 8: All modules must be installed in an enclosure that meets the requirements of ANSI/ISA S82.01

Note 9: No revision to this drawing without prior FMRC Approval.

Note 10. For Schneider Electric internal use only. For control sheet, refer to 19-100986 Rev 1.

Note 11. For Division 2 installation, the apparatus shall be installed in compliance with the enclosure, mounting, spacing, and segregation requirements of the ultimate application, including access only by the use of a tool and provision for Division 2 wiring methods.

31001365 Rev 01
140 DII 330 00 Wiring Diagram

The following is a UL certified wiring diagram for this module.

Notes related to UL certification for this module.

Note 1. Entity parameters per channel: V_{oc} = 9.5 V
I_{sc} = 80 mA
C_a = 450 nf
L_a = 0.175 mH

Note 2. Maximum non-hazardous area voltage must not exceed 250 V.

Note 3. If the electrical parameters of the cable are unknown, the following values must be used for Ccable and Lcable:
Capactance 60 Pf/ft
Inductance 0.20 uH/ft

Note 4. Install in accordance with the NEC (ANSI/NFPA 70) and ANSI/ISA RP 12.6 for installation in the United States.

Note 5. To maintain intrinsic safety, shield for each cable must be grounded and must extend as close to the terminals as possible.

Note 6. Intrinsically Safe (I.S.) cables of one module must be routed separately from I.S. cables of another module.

Note 7. I.S. devices when connected to I.S. terminals must satisfy the following conditions:
$V_{oc} < V_{max}$
$I_{sc} < I_{max}$
$C_a > C_i + C_{cable}$
$L_a > L_i + L_{cable}$

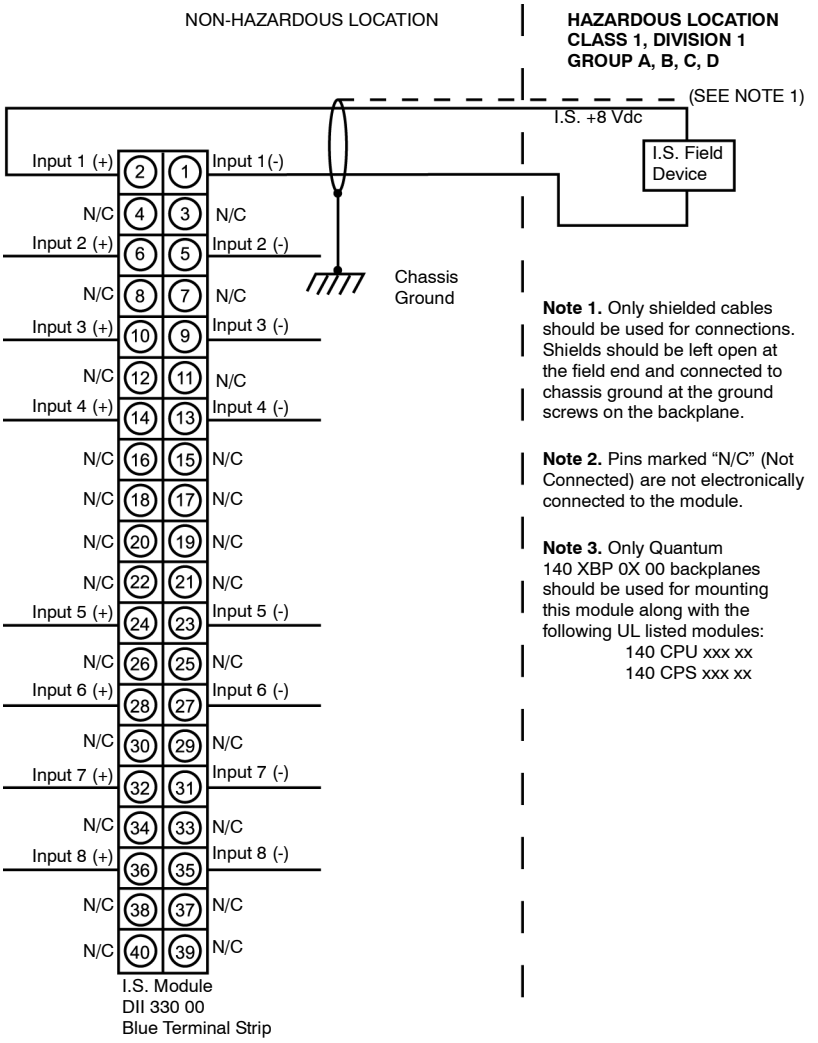

Note 1. Only shielded cables should be used for connections. Shields should be left open at the field end and connected to chassis ground at the ground screws on the backplane.

Note 2. Pins marked "N/C" (Not Connected) are not electronically connected to the module.

Note 3. Only Quantum 140 XBP 0X 00 backplanes should be used for mounting this module along with the following UL listed modules:
140 CPU xxx xx
140 CPS xxx xx

31001365 Rev 00 140DII33000 Wiring Diagram

Visit http://www.schneider-electric.com for your nearest Schneider Electric affiliate.

Printed in France